SECTION XIV
RADIATOR AND COOLING

Description

The cooling system consists of a tube and fin type radiator, centrifugal water pump, capsule type thermostat, and the necessary connecting hoses and clamps. On models equipped with the Twin-Ultramatic Transmission, a plate type unit transmission fluid cooler is installed at the pump inlet. The cooling system has a 26-quart capacity exclusive of the car heater.

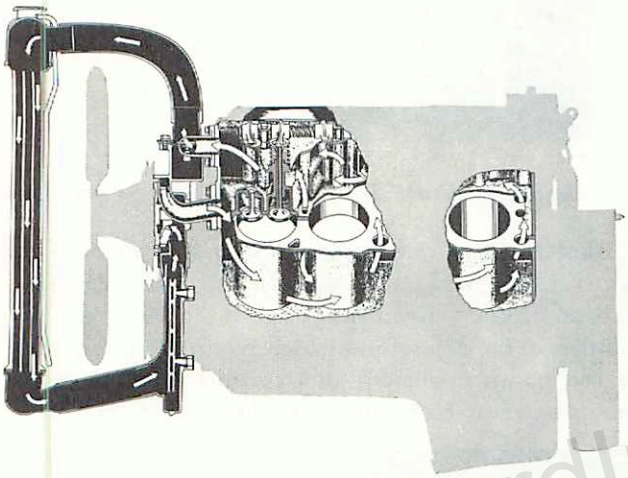

Figure 1—Schematic of the Cooling System

The radiator core has a square, broad frontal area which exposes the fins and tubes to the oncoming air while driving. The radiator tanks are of the lock seam joint type.

The water pump has a single inlet but discharges into an equalizing outlet manifold with dual outlets which feed a balanced flow to both cylinder banks. The coolant is directed through the cylinder block, around each individual cylinder barrel to the water passages in the rear portion of the block, where it passes into the cylinder head, and reverses its direction. It flows through passages around the combustion chambers, valve ports, valve guides, and spark plugs. The coolant is returned to the radiator through an outlet at the forward end of each cylinder head into the water manifold and out the common outlet at the top of the manifold.

The thermostat is located in the water manifold outlet. It regulates the amount of coolant that flows from the cylinder heads to the radiator. When the engine is cold the thermostat valve is closed, preventing circulation through the radiator. When normal operating temperature is reached, the thermostat valve opens gradually, permitting the coolant to circulate throughout the entire system. The standard thermostat starts to open at 167° to 173°; the high reading thermostat starts to open at 177° to 182°.

A pressure type radiator cap is used which raises the coolant boiling point by pressurizing the system.

The radiator drain cock is located at the front bottom center of the radiator.

Two cylinder block drains are used. On the right side the drain plug is located at the rear of the cylinder block, and on the left side the plug is near the center of the block.

Radiator Core

REMOVAL – Drain the cooling system. Disconnect the upper and lower hose connections. Remove the radiator drain cock. Remove the screws attaching the radiator core to the radiator core cradle. There are three screws on each side (see Fig. 2). Then lift the radiator out of the cradle.

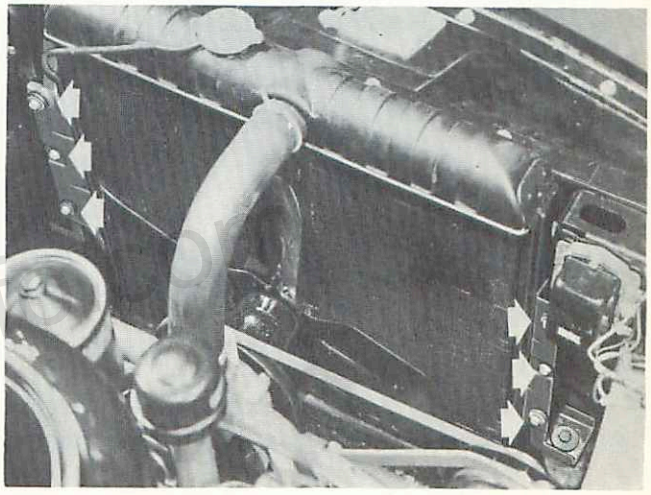

Figure 2—Radiator Core Removal

INSTALLATION—Position the radiator core in the cradle. Install the core retaining screws and tighten securely. Install the radiator drain cock. Install the radiator hoses. Fill the cooling system with coolant.

Fan Belt, Fan, and Pulley

REMOVAL—Loosen the two generator-to-bracket screws and the generator adjusting strap-to-generator bolt. Loosen the adjusting strap-to-water manifold screw. Loosen the screws only as necessary to permit moving the generator. Then push the generator toward the engine to relieve the belt tension. Slip the belt off the generator pulley, fan pulley, and vibration damper and remove it from the engine.

Remove the fan retaining screws which also retain the pulley, and slip the fan and pulley off the water pump shaft hub.

INSTALLATION—Position the fan pulley and fan

on the water pump shaft hub and install the retaining screws. Slip the fan belt over the vibration damper, fan pulley, and generator pulley. Then adjust the fan belt tension and complete the installation.

Fan Belt Tension

ADJUSTMENT—The fan belt should be kept in correct adjustment. Excessive tension will result in placing undue strain on the water pump and generator

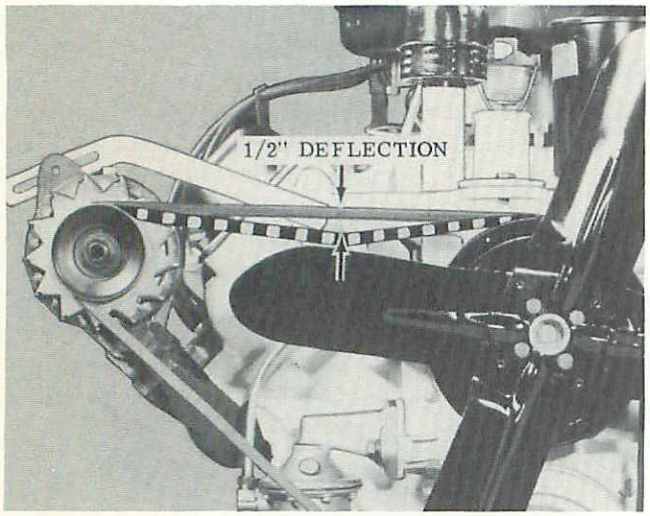

Figure 3—Fan Belt Tension Adjustment

bearings. A belt that is too loose will slip and wear excessively, cause noise, and affect the operation of the water pump and generator.

First loosen the generator-to-bracket screws, generator adjusting strap-to-generator bolt, and the adjusting strap-to-water manifold screw. Then pry the generator outward to put tension on the belt. With normal thumb pressure there should be approximately ½″ deflection of the belt midway between the generator and fan pulleys (see Fig. 3). While holding the generator to maintain the proper belt tension, tighten the generator adjusting strap-to-generator screw to maintain the generator position. Then tighten the generator-to-manifold screw and the generator-to-bracket screws.

Water Pump

A cross section of the water pump is illustrated in Fig. 4. The shaft bearing is prelubricated for the life of the bearing and requires no further lubrication. The pump shaft seal assembly is a combination rubber and carbon washer type. The seal retainer is pressed into the body. The coil spring within the rubber seal not only presses the seal against the retainer at the front, but also maintains constant pressure on the carbon washer against the impeller hub to seal at this point.

The impeller is of a plastic material which resists rust and corrosion.

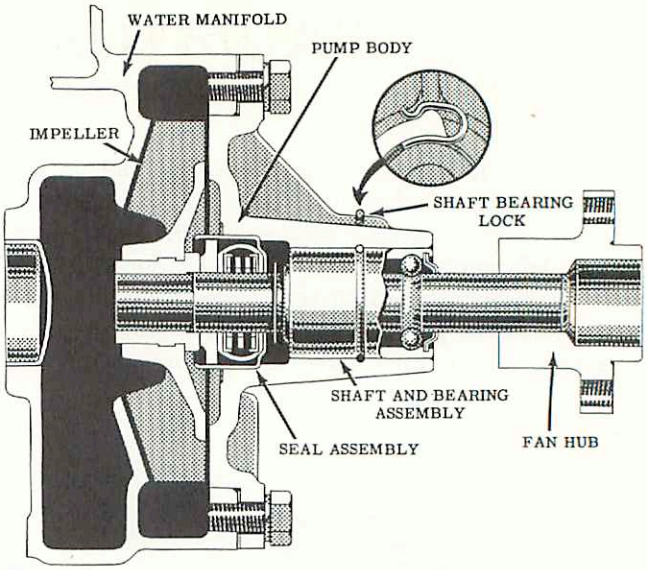

Figure 4—Cross Section of the Water Pump

REMOVAL—Drain the cooling system. Remove the fan belt, fan, and pulley as described under Fan Belt, Fan, and Pulley—Removal.

Remove the cap screws which retain the pump body to the pump manifold; this permits removal of the pump assembly from the manifold (see Fig. 5).

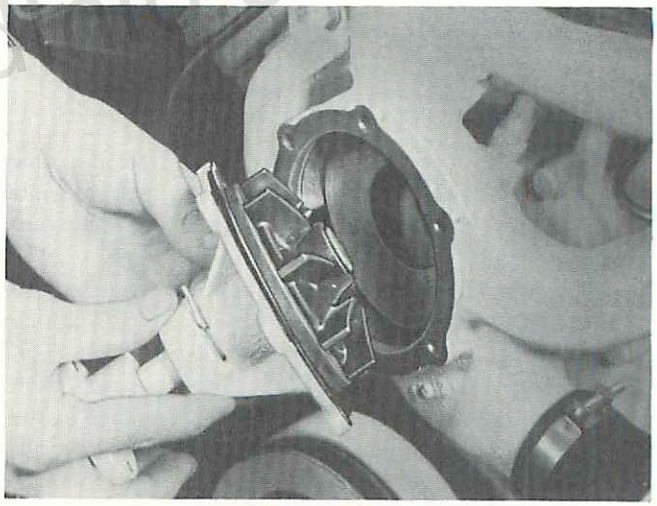

Figure 5—Water Pump Removal

INSTALLATION—Place a new gasket on the pump body flange. Before installing the pump, make sure the by-pass hole in the manifold is open. Position the pump on the manifold and install the retaining screws. Copper washers should be used at each of the screws to prevent leakage.

Install the fan belt, fan, and pulley and adjust the fan belt tension.

Water Pump Manifold

REMOVAL—Drain the cooling system. Before removing the manifold, remove the fan belt, fan, and

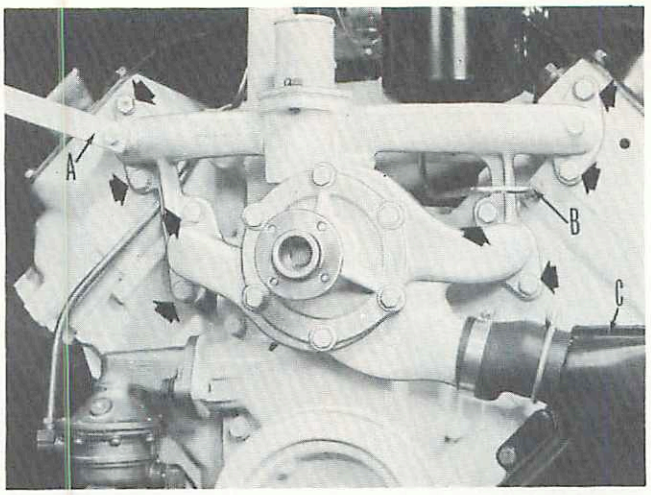

Figure 6—Water Pump Manifold Removal

pulley. It is not necessary to remove the water pump; the pump and manifold are removed as an assembly. Remove the upper radiator hose and heater hose. Remove the lower radiator hose or, on models equipped with the automatic transmission, loosen the hose clamp and slip the oil cooler (C, Fig. 6) and connecting hose off the manifold. Disconnect the oil filter pipe (B). Remove the generator adjusting strap screw (A) and swing the strap out of the way. Remove the screws indicated in Fig. 6 and remove the manifold.

INSTALLATION—Examine the water manifold by-pass port (indicated by arrow in Fig. 7) and clean out if necessary. Make sure that there are no deposits or other obstructions in the ports of the manifold, cylinder block, and heads.

Position the water pump manifold assembly at the engine, use all new gaskets, and install the retaining screws. Place the generator adjusting arm at the manifold and install the retaining screw, but do not tighten. Connect the oil filter pipe. Install the lower hose or, on models equipped with the automatic transmission, install the oil cooler connecting hose. Install the upper radiator hose and heater hose.

Align the fan pulley and fan on the hub and install the retaining screws. Install the fan belt and adjust to proper tension.

Refill the cooling system.

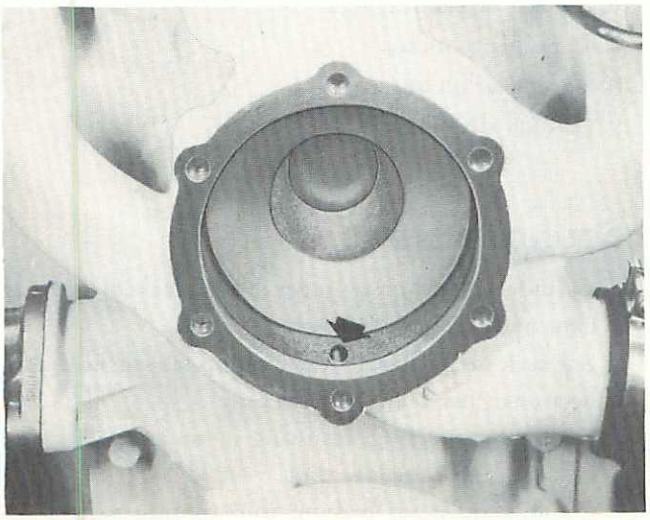

Figure 7—Water Pump Manifold By-Pass

Radiator Cap

The cooling system is provided with a pressure type radiator cap. The sealing of the cooling system by the cap maintains a pressure of approximately 12 p.s.i. in the system while the engine is at operating temperature. Pressure in the system raises the boiling point of the coolant and permits slightly higher engine temperature without the danger of overheating or loss of coolant. After the engine is stopped, and as the coolant temperature decreases, a partial vacuum (pressure lower than atmospheric) is created in the system. The valve in the center of the cap is unseated by atmospheric pressure when the pressure in the system falls below outside air pressure. Figure 8 illustrates a cross section of the pressure cap.

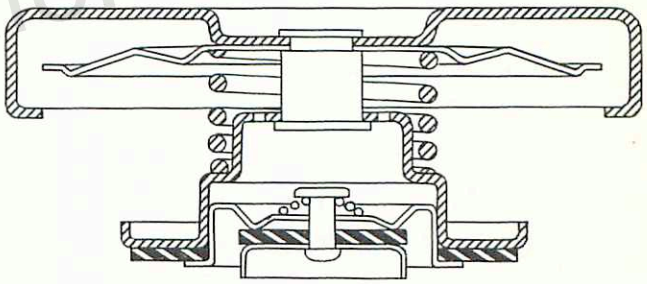

Figure 8 — Radiator Pressure Cap

To remove the cap when the engine is hot, first slowly loosen the cap. If escaping air is heard, the system is still under pressure and the cap should be left in this position until all pressure is relieved. Then remove the cap.

Thermostat

REMOVAL and INSTALLATION—Drain the cooling system until the water level is below the water outlet in the water pump manifold. Disconnect the hose from the water outlet flange. Remove the cap screws attaching the water outlet flange to the manifold (see Fig. 9) and lift out the thermostat.

There are no repairs or adjustments that can be made on the thermostat, and failure to operate properly should be corrected by replacement with a new unit.

Position a new gasket on the manifold. Install the thermostat and water outlet flange. Install the retaining screws. Install the radiator hose.

Refill the cooling system.

Water Temperature Indicator Sending Unit

REMOVAL and INSTALLATION—Drain the cooling system. Remove the nut and wire from the water temperature indicator sending unit which is located in the rear of the left bank cylinder head. Then unscrew the indicator from the head.

Install and tighten the indicator in the head. Install the wire and nut and tighten.

Refill the cooling system.

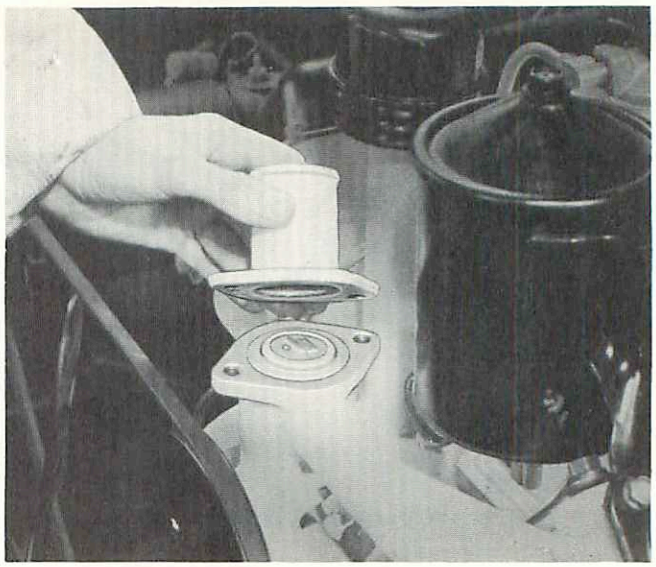

Figure 9—Thermostat Removal

TROUBLE SHOOTING

EXCESSIVE ENGINE TEMPERATURES

Causes

1. Engine fan belt slipping.
2. Abnormal water loss from cooling system.
3. Radiator tubes restricted or clogged.
4. Radiator core surface restricted.
5. Thermostat not opening properly.
6. Thermostat reversed when installed.
7. Deteriorated or collapsed water hose.
8. Engine fan blades bent.
9. Abnormal sludge or dirt accumulation in radiator, water jacket of heads, and block.
10. Pump impeller loose on shaft.
11. Abnormal clearance of impeller in pump.
12. Any condition that will result in preignition.
13. Ignition timing too late or too early.
14. High frictional resistance in engine assembly resulting from:
    a) Insufficient internal clearances.
    b) Internal misalignment.
    c) Use of heavy engine oil.
    d) Insufficient oil circulation.
15. Abnormal functional resistance in power transmitting units.
16. Seized wheel bearings.
17. Dragging brakes.
18. Overload on engine.
19. Clutch slipping.

WATER LOSS FROM COOLING SYSTEM

Causes

1. Radiator leaks.
2. Hose leakage.
3. Cooling system drain plug or petcock leakage.
4. Water pump leakage.
5. Water pump shaft seal worn.
6. Cylinder block or cylinder head cracked (leaking externally or internally).
7. Air leak occurring at water pump seal or hose connections (loss at high speed only).
8. Engine overheating, resulting in water boiling and loss through overflow pipe.
9. Combustion gases leaking into cooling system because of poor seal at cylinder head gasket.

WATER PUMP NOISES

Description

A noisy water pump can generally be detected by the use of a sounding rod against the water pump body or by removing the fan belt temporarily.

Causes

1. Hub loose on pump shaft.
2. Pump impeller loose on pump shaft.
3. Worn pump shaft bearing.
4. Impeller blades rubbing water pump body or pump manifold.
5. Broken impeller.

FAN NOISES

Description

Noises due to the condition of the fan belt are usually apparent by a squeak or squeal when the engine is idling or when the engine is rapidly accelerated.

Fan noises will generally cause a whir or hum at periods of higher engine speeds.

Causes

1. Fan belt noises.
   a) Belt adjusted too tight (squeak).
   b) Belt adjusted too loose (squeak on acceleration).
   c) Grease, rust, or other foreign matter on fan belt or pulleys.
   d) Incorrect type or make of fan belt.
   e) Fan belt worn or burned.
   f) Misalignment of pulleys.
2. Fan noises.
   a) Fan blades loose.
   b) Hub loose on shaft.
   c) Unbalanced fan assembly.
   d) Uneven pitch of fan blades.
   e) Bent or distorted fan blades.
   f) Fan blades striking belt or radiator.
   g) Crankshaft, generator, or fan pulleys cracked or distorted.

PREMATURE FAN BELT BREAKAGE OR RAPID WEAR

Causes

1. Tight adjustment causing abnormal stretch.
2. Loose adjustment causing slippage.
3. Use of incorrect type belt.
4. Oil on belt causing deterioration.
5. Misalignment of pulleys.
6. Excessive friction in water pump or generator causing overload on belt.
7. Broken or rough fan pulley flanges.

HEAT INDICATOR GAUGE INOPERATIVE OR OPERATING ERRATICALLY

Causes

1. Faulty sending unit.
2. Voltage regulator inoperative or loose connection at voltage regulator.
3. Loose connection at sending unit or panel unit.

NOTES