Packard SERVICE TECHNICAL Bulletin

56T-20
Dealer 17
May 3, 1956

To: ZONES AND DEALERS

Subject: ENGINE OIL PUMP RELIEF VALVE TUBE KIT FOR CORRECTION OF HYDRAULIC VALVE TAPPET LETDOWN - 55TH-56TH SERIES

Hydraulic valve tappets that intermittently become noisy at idle speed or at speeds of 40 to 60 M.P.H. after the oil gets hot in most cases has been caused by air getting into the oil pump and gallery thereby interrupting the oil supply to the tappets.

To prevent this condition, engine oil pumps for production have been revised to include a threaded plug in the open end of the bore for the oil pressure relief valve and spring. This threaded plug also acts as a retainer for the oil pressure relief valve and spring. This revision began with engine production of April 10 with the following Utica Plant engine numbers:

A-12452	(5640)	C-1400	(5688)
AA-1481	(5640)	D-7326	(5680)
B-6060	(5660-70)	DD-1001	(5680)
BB-1064	(5660-70)		

Incidentally, the Utica Plant engine number is now stamped on the casting at the same general location as the engine serial number and not on the right rear exhaust port flange as has been the practice previously.

For Service, we have released an engine oil pump relief valve tube with attaching parts which can easily be installed on the oil pump in place of the relief valve spring retainer. The small end of this tube points downward into the oil in the oil pan thus preventing any air being drawn in past the relief valve. This engine oil pump pressure relief valve tube kit is identified as part number 6484613 and may be procured on order from your parts warehouse. In every case where intermittent hydraulic valve tappet noise is encountered on 55th and 56th Series cars this kit should be installed. Where the car has been in service less than 12 months or 12,000 miles, we will honor your claim, without the necessity of prior approval, for parts and 3.3 hours labor per car for installation.

TUBE INSTALLATION

1. Remove oil pan and pump assembly.

2. Remove cotter pin from oil pump relief valve and discard relief valve spring retainer.

3. Check relief valve for being free, it should fall back and forth from its own weight. Clean up with crocus cloth if necessary to free up valve.

4. Enlarge the cotter pin hole by drilling through with a 5/32" drill. Be sure to wash the oil pump thoroughly after drilling.

5. Install the relief valve and spring, start the flanged end of the tube in the housing with small end of tube pointing downward (toward bottom of pump). See illustration.

   Carefully drive the tube into the housing with the back side of flange just past the cotter pin holes. A tool can be made up locally for driving in the tube by using a small steel sleeve that will fit in the relief valve opening and cutting a slot in the side of the sleeve so it will straddle over the bend of the tube.

   Drive a roll pin in each side of the cotter pin hole with their inner ends just touching the tube to hold it in place. See illustration.

   Make sure the float operates freely before reinstalling the pump and oil pan.

6. Due to slight variations in the oil pan and the close fit on the left side at the vacuum unit, interference may be encountered at the lower end of the tube and the rear roll pin.

   If the oil pan screw holes do not line up when installing the pan, cut 1/4" off the rear roll pin with a hack saw and bend the lower end of the tube inward and forward slightly.

When installing the oil pump tube kit on cars with engines prior to the following 56th Series Utica Plant engine numbers, the valve spring baffles described in Service Counselor Volume 30, Number 1, should also be installed. This is important for oil consumption control as noisy tappets will develop if the oil level gets too low. At the same time the possibility of oil fouling of spark plugs will be greatly reduced or eliminated.

A-6723	C-1104
AA-1166	D-4839
B-3230	
BB-1050	

In all test cases thus far where we have installed the oil pump tube kit, intermittent tappet noise has been corrected. However, if after the installation of the oil pump tube kit tappets continue to be intermittently noisy, the probably cause then is an excessive oil leakage past the camshaft thrust plate or main bearings causing low oil pressure in the gallery. Under such circumstances you should --

a. Test the oil gallery pressure at the 1/8" opening in the left cylinder head that supplies oil to the oil filter and at the corresponding 1/8" opening at the rear of the right cylinder head.

   The gallery pressure should test 6 to 10 lbs. at 400 RPM with hot oil.

b. If the gallery pressure is below 6 lbs. at 400 RPM, install a new camshaft thrust plate, part number 6480918, and spacer, part number 6480917. The new thrust plate and spacer provides intermittent oil feed to the timing chain instead of a steady feed, resulting in a higher gallery pressure.

c. If the preceding corrections are not 100% effective, we recommend replacing the main bearing shells to obtain a minimum bearing clearance of approximately .001".

There are several other conditions which might cause tappet noise which we are listing here for your ready reference:

1. Tappets that leak down overnight and are noisy for a few seconds after starting the engine is generally caused by excessive oil leakage past the tappet piston.

   This condition generally can be corrected by installing new hydraulic tappets, part number 476060. These tappets have a greater oil reservoir, are not as susceptible to leak down and do not, therefore, depend as much on engine oil pressure to supply oil when when first starting. (The new tappets started in production with 56th Series engines).

   If tappet leak down overnight is not corrected by cleaning or replacing tappets, the cause may be due to low gallery pressure, therefore, the new camshaft thrust plate and spacer should be installed.

2. One or more tappets that are continually noisy is generally caused by dirt under the tappet check valve and in most cases can be corrected by disassembling and cleaning the tappets thoroughly.

   If the tappet has run noisy for a length of time, it may be punished to the point where replacement will be necessary.

Very truly yours,

T. W. Nertney

T. W. Nertney
Service Technical Manager

HGL:mu

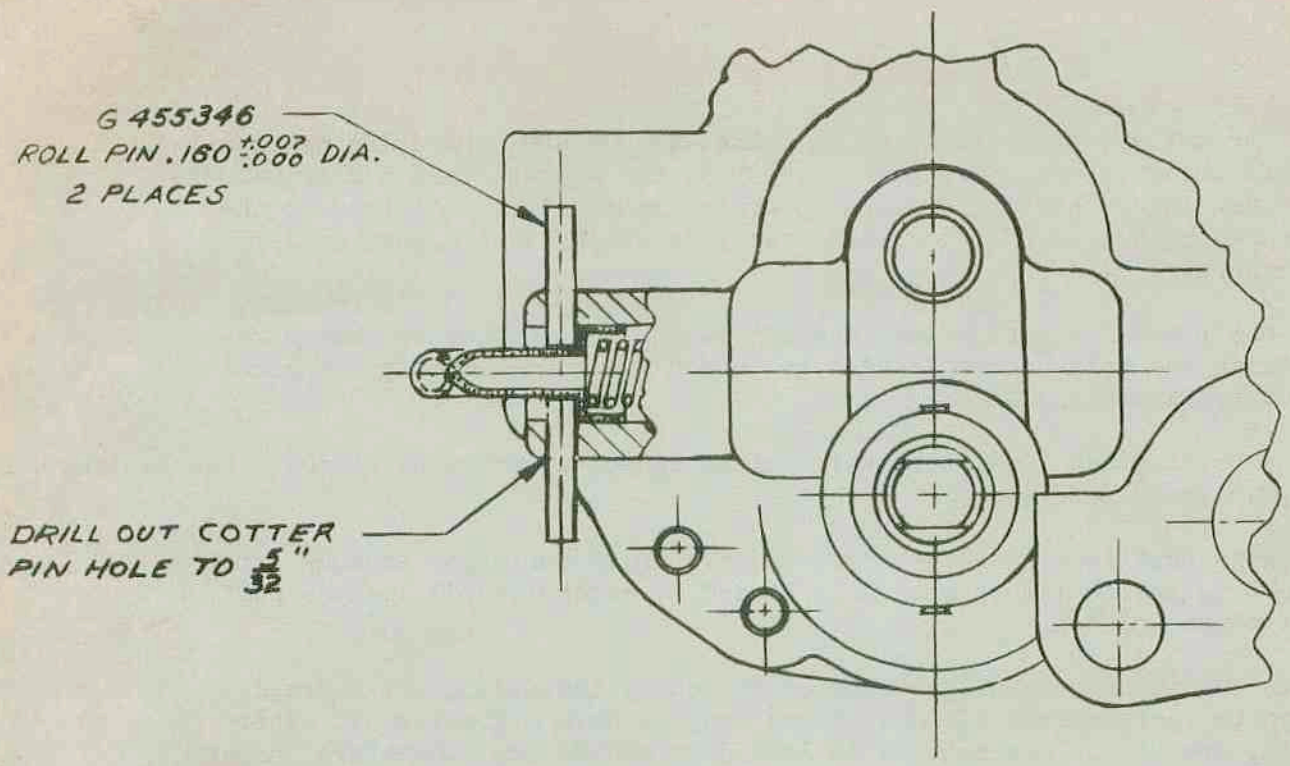
G 455346
ROLL PIN .160 +.007 -.000 DIA.
2 PLACES
DRILL OUT COTTER
PIN HOLE TO 5/32"

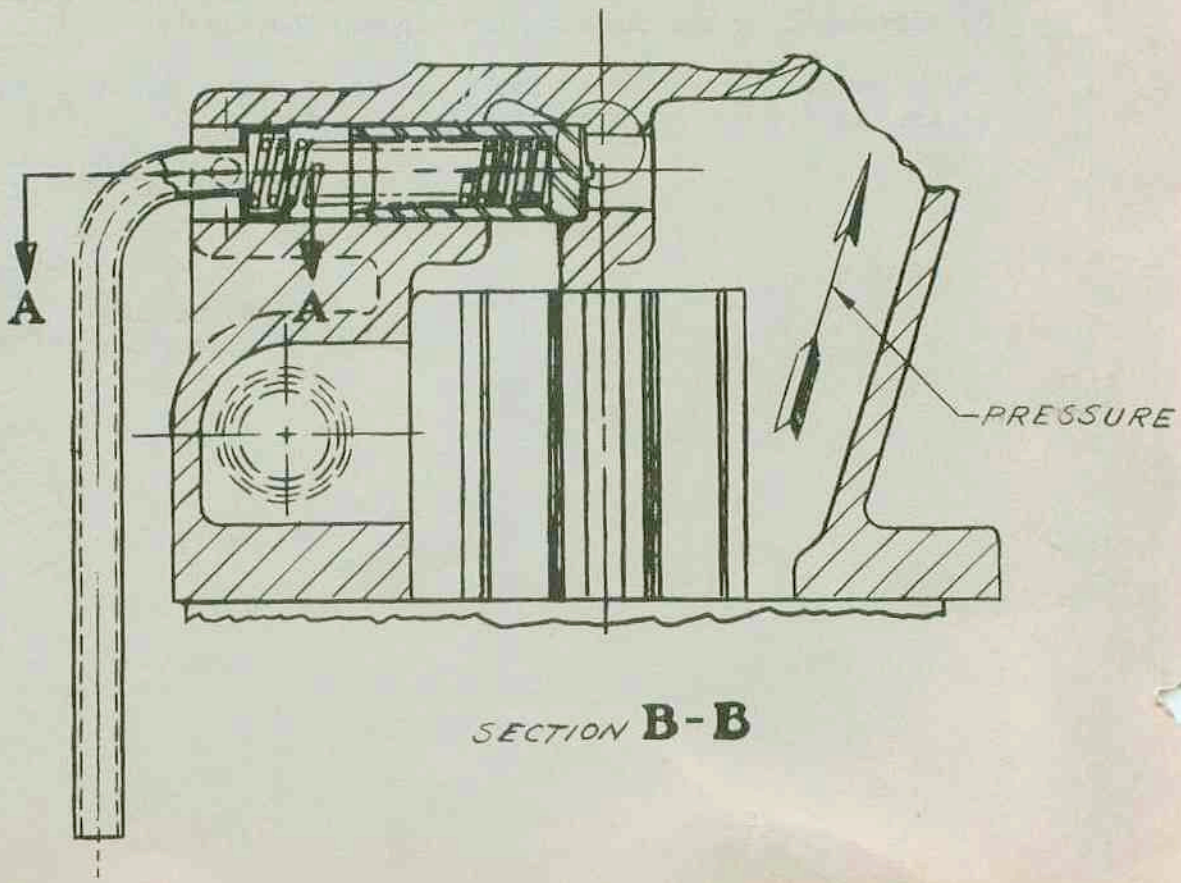
A
A
PRESSURE

SECTION **B-B**