REPLACES:
9C-700, 2/15/55
9C-701, 6/15/55
9C-702, 11/1/55
9C-703, 2/15/56

GM
GENERAL MOTORS
PARTS SALES
UNITED MOTORS SYSTEM

Rochester Carburetors
MODEL 4GC
1955-56 PACKARD

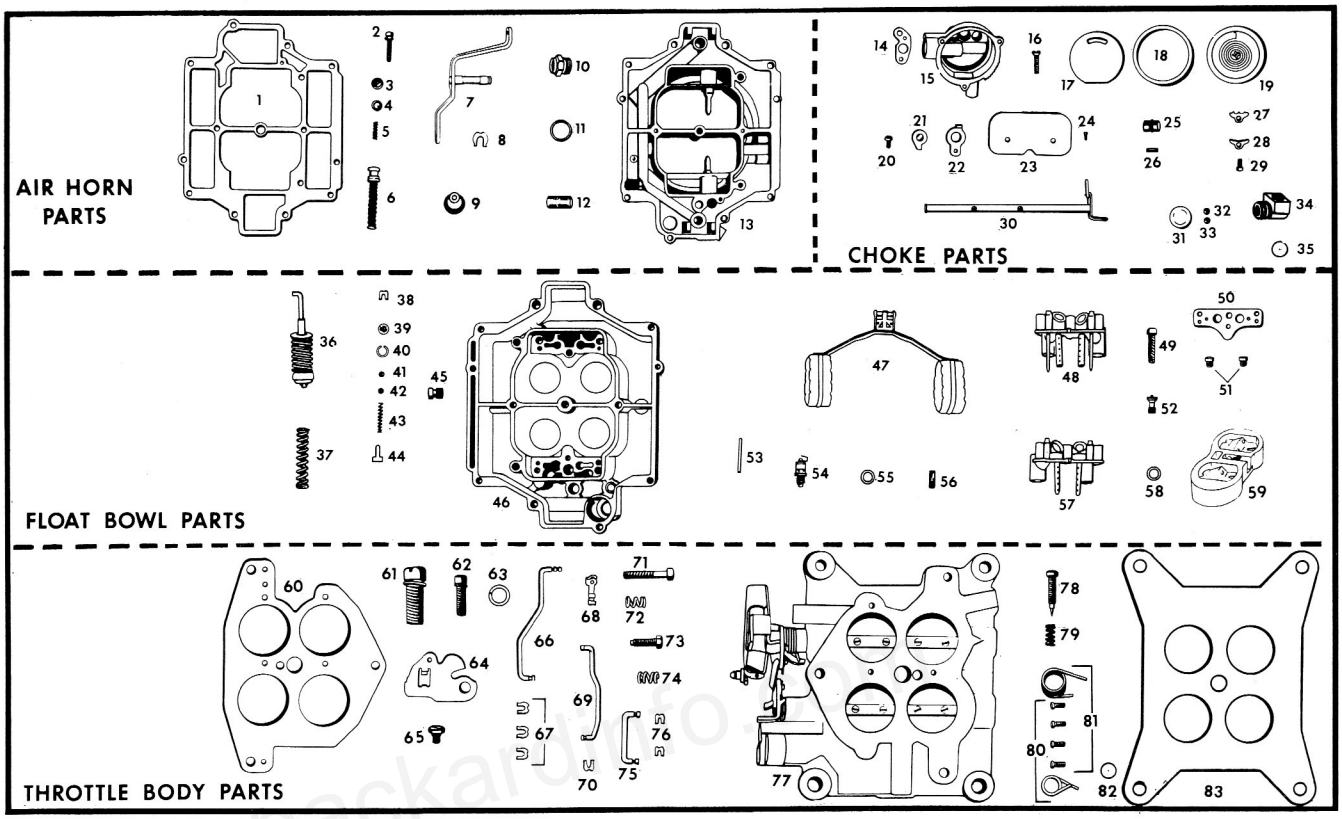

PARTS SHOWN ARE FOR IDENTIFICATION ONLY. CONSULT PARTS LIST FOR CORRECT PART NAME AND NUMBER

	1955			1956			YEAR
	STANDARD	CARIBBEAN		STANDARD	CARIBBEAN		APPLICATION
		FRONT	REAR		FRONT	REAR	
	7007230	**7008230**	**7008231**	**7008610**	**7009600**	**7009601**	**Carburetor No.**
	7007230	**7008230**	**7008231**	**7009904**	**7009600**	**7009601**	**Replacement Carb. No.**
	7009322	7009323	7009323	7009927	7009931	7009931	REPAIR KIT—Complete
	7009296	7009296	7009296	7009947	7009947	7009947	GASKET KIT—Complete
	7006133	7008927	7008927	——	——	——	REPAIR KIT—W/O Gaskets
	7007134	7007134	7007134	——	——	——	GASKET KIT—W/O Flg. Gasket
Illus. No.	AIR HORN PARTS						
1	7006061	7006061	7006061	7006061	7006061	7006061	★Gasket—Air Horn
2	7000249	7000249	7000249	7000249	7000249	7000249	Screw—Air Horn
3	7004527	7004527	7004527				Idle Vent Valve
4	7004528	7004528	7004528				Idle Vent Valve Guide
5	7004529	7004529	7004529				Idle Vent Valve Spring
6	7000204	7000204	7000204	7007522	7009054	7009054	Power Piston
7	7007617	7007617	7007617	7009519	7009519	7009519	Pump Shaft and Lever Assembly
8	7007616	7007616	7007616	7007616	7007616	7007616	★Clip—Pump Shaft
9	7006372	7006372	7006372	7006372	7006372	7006372	★Boot—Pump Plunger
10	7002862	7002862	7002862	7002862	7002862	7002862	Strainer Nut
11	7001597	7001597	7001597	7001597	7001597	7001597	★Gasket—Strainer Nut
12	7003083	7003083	7003083	7003083	7003083	7003083	★Strainer—Fuel Inlet
13	7006129	7006129	7006129	7009477	7009477	7009477	Air Horn Assembly

★ REPAIR KIT CONTENTS

FORM 1236 I.P.S.
PRINTED IN U.S.A.

	1955			1956			YEAR
	STANDARD	CARIBBEAN		STANDARD	CARIBBEAN		APPLICATION
		FRONT	REAR		FRONT	REAR	
	7007230	**7008230**	**7008231**	**7008610**	**7009600**	**7009601**	**Carburetor No.**
Illus. No.	CHOKE PARTS						
14	7007502	7007502	7007502	7007502	7007502	7007502	★Gasket—Choke Housing
15	7007901	7008304	7008327	7007901	7008304	7009288	Choke Housing Assembly
16	7004821	7004821	7004821	7004821	7004821	7004821	Screw—Choke Housing
17	7004285	7004285	7004285	7004285	7006643	7006643	Baffle Plate
18	7002760	7002760	7002760	7002760	7002760	7002760	★Gasket—Stat Cover
19	7007956	7008922	7008922	7009480	7008922	7008922	Stat Cover—Coil and Gasket Assembly
20	1875051	1875051	1875051	1875051	1875051	1875051	Screw—Trip Lever
21	7000196	7000196	7000196	7000196	7000196	7000196	Trip Lever
22	7006837	7006837	7006837	7008547	7008547	7008547	Choke Lever and Collar Assembly
23	7000191	7008744	7008744	7000191	7008744	7008744	Choke Valve
24	7007627	7007627	7007627	7007627	7007627	7007627	Screw—Choke Valve
25	7005972	7009062	7009062	7005972	7009062	7009062	Choke Piston
26	7004748	7004748	7004748	7004748	7004748	7004748	Pin—Choke Piston
27		7006846	7006846				Stat Cover Retainer—Toothed
28	7000614	7000614	7000614	7000614	7000614	7000614	Stat Cover Retainer—Plain
29	131958	131958	131958	131958	131958	131958	Screw—Stat Cover
30	7000189	7008185	7008185	7000189	7008185	7008185	Choke Shaft Assembly
31	7003135	7007893	7007893	7003135	7007893	7007893	Plug—Expansion—Large
32	7002814	7002814	7002814	7002814	7002814	7002814	Plug—Lead Ball—Small
33	7001637	7001637	7001637	7001637	7001637	7001637	Plug—Lead Ball—Large
34		7008726	7008726		7008726	7008726	Fitting—Stat Cover
35		7006475	7006475	7006475	7006475	7006475	Plug—Expansion—Small
	FLOAT BOWL PARTS						
36	7000208	7007807	7007807	7009203	7009203	7009203	★Pump Assembly
37	7004597	7004597	7004597	7004597	7004597	7004597	★Spring—Pump Return
38	7005032	7005032	7005032	7005032	7005032	7005032	★Clip—Pump Plunger
39	7001604	7001604	7001604	7001604	7001604	7001604	★Screen—Pump Inlet
40	7001605	7001605	7001605	7001605	7001605	7001605	★Retainer—Screen
41	7002120	7002120	7002120	7002120	7002120	7002120	★Ball—Pump Inlet Check
42	7002117	7002117	7002117	7002117	7002117	7002117	★Ball—Pump Discharge Check
43	7006059	7006059	7006059	7006059	7006059	7006059	★Spring—Pump Discharge Ball
44	7003838	7003838	7003838	7003838	7003838	7003838	★Guide—Pump Discharge Spring
45	7005286	7005286	7005286				Sight Plug
46	7007896	7008923	7008923	7009478	7009673	7009673	Float Bowl Assembly
47	7000199	7000199	7000199	7000199	7000199	7000199	Float Assembly
48	7007903	7008308	7008315	7009179	7009582	7009582	Venturi Cluster—Primary
49	451910	451910	451910	451910	451910	451910	Screw—Venturi Cluster
50	7007803	7007803	7007803	7007803	7007803	7007803	★Gasket—Venturi Cluster
51	7002650	7002649	7002649	7002652	7002647	7002647	Jet—Primary—Standard
51	7002658	7002644	7002644	7008666	7001607	7001607	Jet—Secondary—Standard
52	7001608	7001608	7001608	7009349	7006331	7006331	★Power Valve Assembly
53	7001595	7001595	7001595	7001595	7001595	7001595	Pin—Float Hinge
54	7006134	7006134	7006134	7006134	7006134	7006134	★Needle and Seat Assembly
55	7001613	7001613	7001613	7001613	7001613	7001613	★Gasket—Needle and Seat
56	7006079	7006079	7006079	7006079	7006079	7006079	★Strainer—Needle Seat
57	7007905	7006299	7006299	7009182	7008955	7008955	Venturi Cluster—Secondary
58	7001613			7001613	7001613	7001613	★Gasket—Power Valve
59				7009210	7009585	7009585	Auxiliary Throttle Valve Assembly
	THROTTLE BODY PARTS						
60	7006887	7006887	7006887	7009256	7009256	7009256	★Gasket—Throttle Body
61	7004324	7004324	7004324	7004324	7004324	7004324	Screw—Throttle Body—Large
62	7005188	7005188	7005188	7005188	7005188	7005188	Screw—Throttle Body—Small
63	121744	121744	121744	121744	121744	121744	Lockwasher—Throttle Body Scr—Small
64	7004395	7004395	7008854	7004395	7004395	7008854	Fast Idle Cam
65	7003561	7003561	7003561	7003561	7003561	7003561	Screw—Cam Attaching
66	7006835	7006835	7006835	7006835	7006835	7006835	Choke Rod
67	7005032	7005032	7005032	7005032	7005032	7005032	★Clip—Choke Rod
68	7003137	7003137	7003137	7003137	7003137	7003137	★Clip—Pump Rod Upper
69	7000246	7000246	7000246	7000246	7000246	7000246	Pump Rod
70	7005032	7005032	7005032	7005032	7005032	7005032	★Clip—Pump Rod—Lower
71	7001619	7008313	7001619	7001619	7008313	7001619	Screw—Idle Stop
72	7003176	7003176	7003176	7003176	7003176	7003176	Spring—Idle Stop—Screw
73	7003122	7003122	7003122	7003122	7003122	7003122	Screw—Fast Idle
74	7003176	7003176	7003176	7003176	7003176	7003176	Spring—Fast Idle Screw
75	7000241	7000241	7000241	7000241	7000241	7000241	Link—Secondary Lever
76	7005032	7005032	7005032	7005032	7005032	7005032	★Clip—Secondary Lever Link
77	7007897	7008924	7008925	7009479	7009674	7009675	Throttle Body Assembly
78	7004402	7007008	7007008	7004402	7009638	7009638	★Idle Needle
79	7003190	7008314	7008314	7003190	7008314	7008314	Spring—Idle Needle
80	7006479	7006479	7006479				Secondary Throttle Return Spring Kit
81	7006478	7006478	7006478				Shaft Override Spring and Screws Kit
82	7006475	7006475	7006475	7006475	7006475	7006475	Expansion Plug
83	7008495	7008495	7008495	7008495	7008495	7008495	Flange Gasket

★ REPAIR KIT CONTENTS

GM
GENERAL MOTORS
PARTS SALES
UNITED MOTORS SYSTEM

Rochester Carburetors
MODEL 4GC
1955-56 PACKARD
STANDARD AND "CARIBBEAN"
ADJUSTMENTS AND SPECIFICATIONS

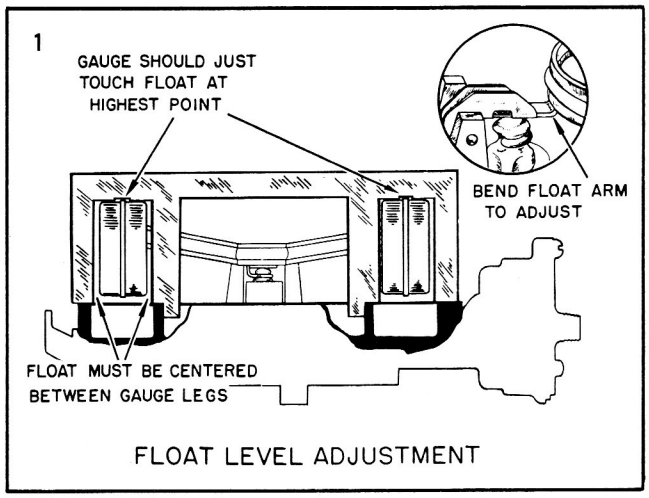

SETTING — 1⅝", GAUGE BT-89

With air horn inverted, gasket in place, position Gauge BT-89 on floats so that the gauge rests against the curvature in the bore of the carburetor air horn. Bend the float arms at rear of assembly so that floats just touch the gauge. Then bend float arms horizontally to center each pontoon between the gauge legs. Repeat the same adjustments on opposite floats.

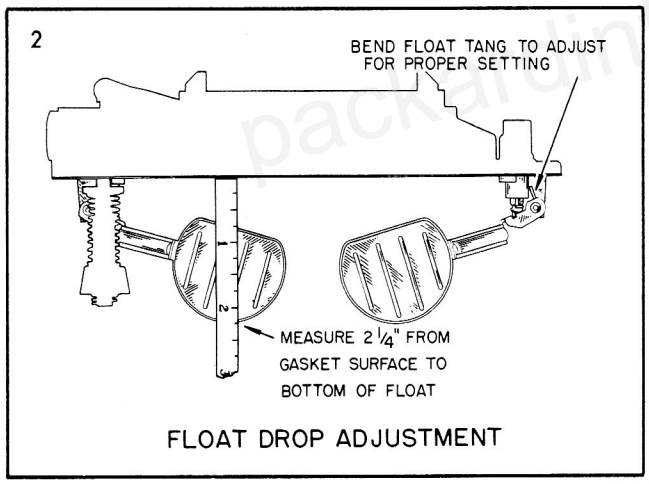

SETTING — 2¼", BT-93 OR SCALE

The float drop is correct when the distance from the air horn gasket to the bottom of the float is 2¼". To adjust, bend the float drop tang at the rear of the float; toward the needle seat to lessen drop, away from the needle seat to increase drop.

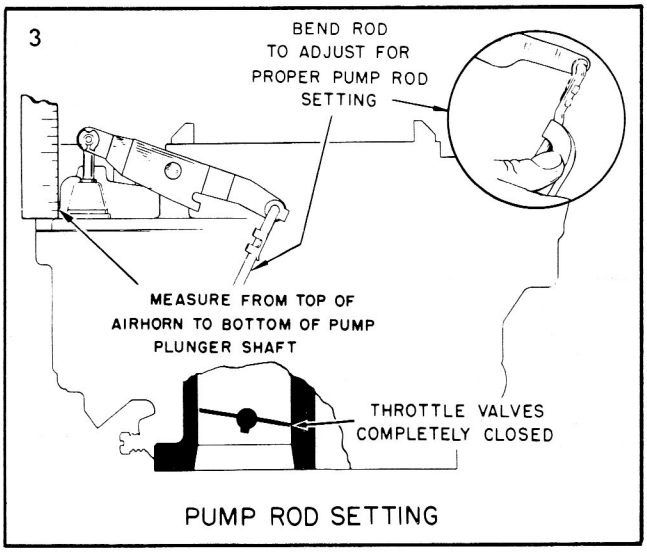

SETTING — SEE SPECIFICATION — PAGE 6

Back off the fast idle and throttle stop screws, so that the throttle valves are tightly closed. With the throttle lever held in this position, carefully bend the pump rod to obtain the proper measurement from the top of the air horn to the bottom of the pump plunger rod. (Bending Tool BT-18).

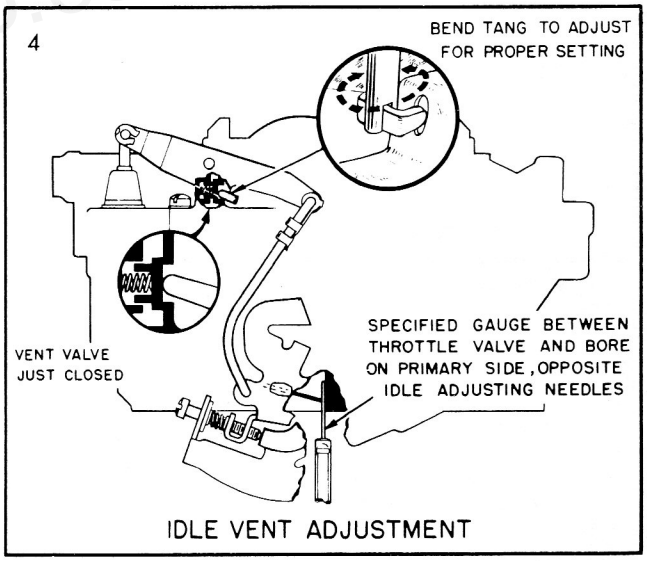

SETTING — .063", GAUGE BT-79, TOOL BT-69

With the primary throttle valves closed against a .063 wire gauge (BT-79), bend the idle vent tang with Bending Tool BT-69 so that the tang just touches the face of the valve.

AUTOMATIC CHOKE ADJUSTMENT

SETTING — INDEX

Loosen the three retaining screws and rotate the coil cover counter-clockwise against the coil tension until the index mark on the cover is in line with the index point on the choke housing. At room temperature, the choke valve should be lightly closed.

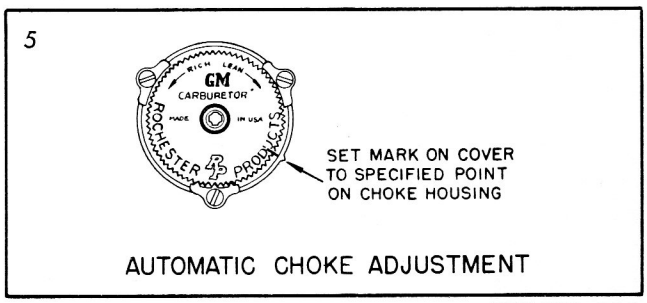

FORM 1236 I.P.S.
PRINTED IN U.S.A.

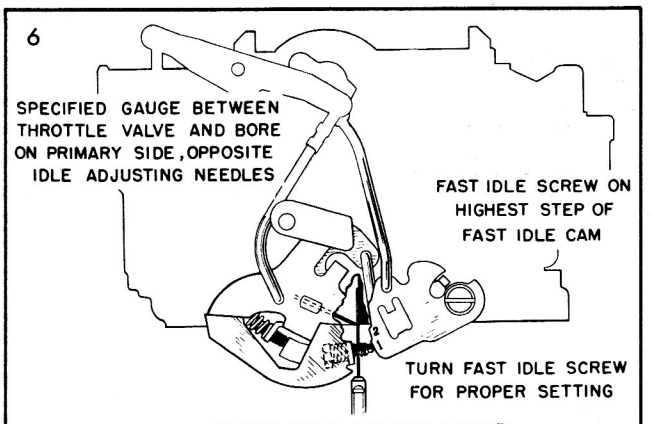

FAST IDLE ADJUSTMENT

SETTING — SEE SPECIFICATIONS — PAGE 6

With the choke valve fully closed turn the fast idle screw against the high step of the fast idle cam to obtain the proper clearance between the throttle valve and bore opposite the idle adjusting needle. As a final on-the-car adjustment, set the fast idle at the required R.P.M. with the engine hot.

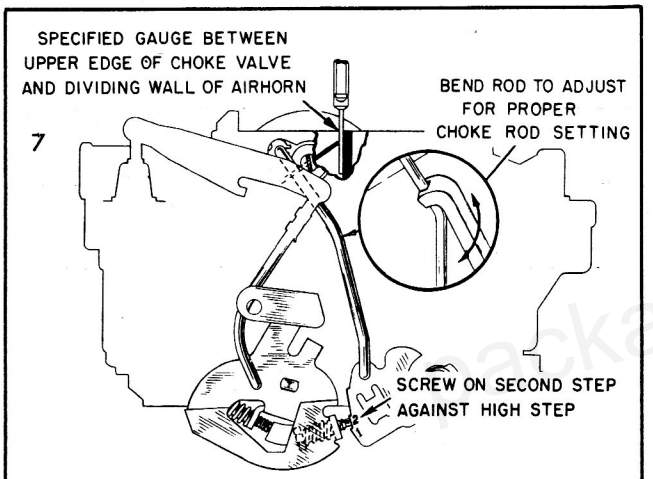

CHOKE ROD ADJUSTMENT

SETTING — SEE SPECIFICATIONS — PAGE 6

Place the fast idle screw on the second step of the fast idle cam with the side of the screw resting against the high step of the cam. Be sure the choke lever is in contact with the choke counterweight lever. Bend the choke rod so that the proper gauge just fits between the upper edge of the choke valve and the dividing wall of the air horn. Bend choke rod as shown to adjust. Use Bending Tool BT-18.

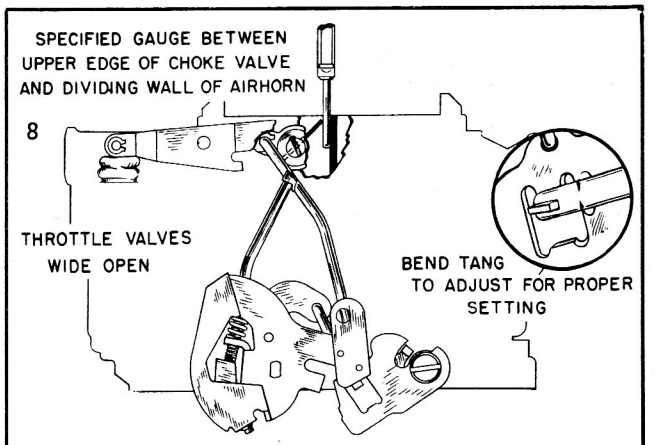

UNLOADER ADJUSTMENT

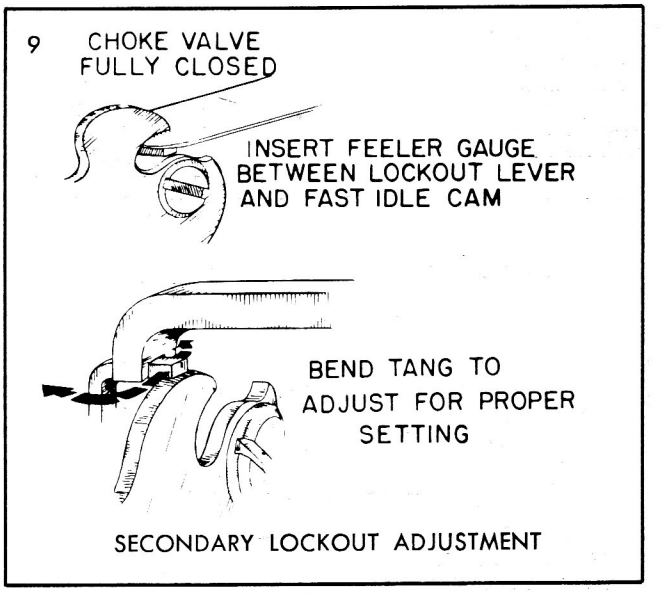

SECONDARY LOCKOUT ADJUSTMENT

SETTING — .015", TOOL BT-91A

With the choke valve partially closed and the fast idle cam and secondary throttle lockout lever in position as shown, there should be .015" clearance between the lever and cam. Bend the tang horizontally with tool BT-91A to adjust.

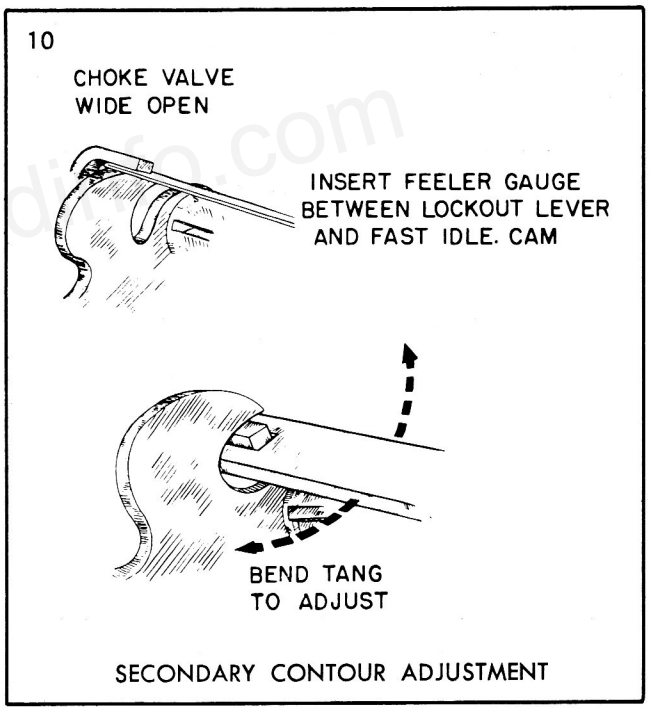

SECONDARY CONTOUR ADJUSTMENT

SETTING — .015", TOOL BT-91A

With the choke valve held wide open and the secondary throttle valves partially open, there should be a clearance of .015" between the lever and the cam. Bend the tang as shown to adjust.

UNLOADER ADJUSTMENT

SETTING — SEE SPECIFICATIONS — PAGE 6

With the choke cover set at index and the choke trip lever in contact with the choke counterweight lever, move the throttle lever to full wide open position. Bend the tang on the fast idle cam to give the proper clearance between the top edge of the choke valve and the dividing wall of the air horn.

Rochester Carburetors

MODEL 4GC
1955-56 PACKARD
STANDARD AND "CARIBBEAN"
ADJUSTMENTS AND SPECIFICATIONS

IDLE ADJUSTMENT PROCEDURE
1955-1956 PACKARD "CARIBBEAN"
DUAL CARBURETOR INSTALLATION

1. Remove the air cleaner, remove the connector link from the front throttle lever, and turn out both idle stop screws until the throttle valves are completely closed.

2. Adjust the connector link nuts to allow the link pin to fit freely into the hole in the throttle lever.

3. Turn the *front* idle stop screw in until it makes contact, then turn *in* one additional turn (this is to assure enough opening to allow the engine to run). The rear idle stop screw need not be adjusted;—the linkage will provide proper rear throttle opening.

4. Turn each mixture needle all the way in, then back out one full turn.

5. With the engine warmed to operating temperature, the hand brake on, and the selector in "dr.", adjust the front idle stop screw to obtain 400 rpm in "Dr.".

6. Adjust the mixture needles for the highest vacuum and rpm. This can usually best be done by turning each needle to its lean "drop-off" point (as noted on the tach.), then its rich "drop-off" point, then returning the needle to a position midway between the two "drop-off" points. Suggested sequence: right rear, right front, left front, left rear.

7. Readjust front idle stop screw to 400 rpm, then recheck idle needles for highest rpm and vacuum. Readjust slow idle if necessary.

8. Put the selector in "N" position. Set the front fast idle at 1850 rpm, with the fast idle screw on the high step of the fast idle cam. Set the rear fast idle at 2300 rpm.

9. Replace the air cleaner and readjust the mixture needles if necessary to maintain 400 rpm in "Dr.".

QUICK REFERENCE SPECIFICATIONS

		1955						1956					
APPLICATION		STANDARD		CARIBBEAN				STANDARD		CARIBBEAN			
CARBURETOR No.		7007230		7008230		7008231		7008610		7009600		7009601	
		PRIM	SEC.	PRIM	SEC.	PRIM	SEC.	PRIM	SEC.	PRIM	SEC.	PRIM	SEC.
Small Venturi		¼"	¼"	¼"	¼"	¼"	¼"	⅛"	⅛"	¼"	¼"	¼"	¼"
Large Venturi		1-1/16"	1"	1-1/64"	57/64"	1-1/64"	57/64"	1⅛"	1¼"	1⅛"	1¼"	1⅛"	1¼"
Main Metering Jets		.050	.058	.049	.044	.049	.044	.052	.066	.047	.054	.047	.054
Idle Needle Holes		.040	—	.040	—	.040	—	.046	—	.046	—	.046	—
Sec. Discharge Holes	Lower	.034	—	.034	—	.034	—	.037	—	.037	—	.037	—
	Middle	.030	—	.030	—	.030	—	.030	—	.030	—	.030	—
	Upper	.030	—	.030	—	.030	—	.030	—	.030	—	.030	—
Spark Drillings		.070(2)	—	—	—	.040(2)	—	.070(2)	—	—	—	.040(2)	—
Pump Discharge Holes		.026	—	.028	—	.024(2)	—	.026	—	.026	—	.026	—
Power Restrictions		.042	—	.032	—	.032	—	.060	—	.062	—	.062	—
Choke Restrictions	Channel	.070	—	.089	—	.089	—	.070	—	.089	—	.089	—
	By-Pass	—	—	.045	—	.030	—	—	—	.045	—	.030	—
Idle Tube Restrictions		.026	.027	.035	—	.035	—	.030	.027	.030	—	.030	—
Lower Idle Bleed		.040	.060	.040	—	.040	—	.040	.048	.040	—	.040	—
Supplementary Idle Parts		.026(2)	.026(4)	—	—	—	—	.026(2)	.026(4)	—	—	—	—
Throttle Body Idle Restrictions		.050(2)	.020(4)	.050(2)	—	.050(2)	—	.050(2)	.020(4)	.050	—	.050	—

QUICK REFERENCE ADJUSTMENTS

YEAR		1955			1956		
APPLICATION		STANDARD	CARIBBEAN		STANDARD	CARIBBEAN	
			FRONT	REAR		FRONT	REAR
FLOAT LEVEL	DIMENSION	1 5/8"	1 5/8"	1 5/8"	1 5/8"	1 5/8"	1 5/8"
	GAUGE	BT-89	BT-89	BT-89	BT-89	BT-89	BT-89
FLOAT DROP	DIMENSION	2 1/4"	2 1/4"	2 1/4"	2 1/4"	2 1/4"	2 1/4"
	GAUGE	BT-93 or SCALE	BT-93 or SCALE	BT-93 or SCALE	BT-93 or SCALE	BT-93 or SCALE	BT-93 or SCALE
PUMP ROD	DIMENSION	1-3/32"	1-3/32"	1-3/32"	1-1/16"	1-1/16"	1-1/16"
	GAUGE	SCALE	SCALE	SCALE	SCALE	SCALE	SCALE
IDLE VENT	DIMENSION	.063	.063	.063	——	——	——
	GAUGE	BT-79	BT-79	BT-79	——	——	——
AUTOMATIC CHOKE SETTING		INDEX	INDEX	INDEX	INDEX	INDEX	INDEX
FAST IDLE	DIMENSION	.024	.020	.030	.024	.020	.030
	GAUGE	BT-90	BT-120	BT-121	BT-90	BT-120	BT-121
	R.P.M.	1700	1850	2300	1700	1850	2300
CHOKE ROD	DIMENSION	.052	.052	.035	.052	.052	.052
	GAUGE	BT-68	BT-120	BT-121	BT-68	BT-120	BT-120
UNLOADER	DIMENSION	.115	.150	.150	.115	.150	.150
	GAUGE	BT-90	BT-119	BT-119	BT-90	BT-119	BT-119
SECONDARY LOCKOUT	DIMENSION	.015	.015	.015	.015	.015	.015
	GAUGE	FEELER	FEELER	FEELER	FEELER	FEELER	FEELER
SECONDARY CONTOUR	DIMENSION	.015	.015	.015	.015	.015	.015
	GAUGE	FEELER	FEELER	FEELER	FEELER	FEELER	FEELER

TUNE-UP

	1955	1956
SPARK PLUG GAP	.033" - .037"	.033" - .037"
BREAKER POINT GAP	.016"	.016"
CAM DWELL	26° - 33°	26° - 33°
IGNITION TIMING	5° B.T.C.	10° B.T.C.
IDLE R.P.M.	400 DRIVE	400 DRIVE
FAST IDLE	SEE ABOVE	SEE ABOVE

CARBURETOR TOOLS AND GAUGES AS LISTED ARE AVAILABLE THROUGH UMS DISTRIBUTORS

Rochester Carburetor

GM GENERAL MOTORS PARTS SALES UNITED MOTORS SYSTEM

A GENERAL MOTORS PRODUCT — A UNITED MOTORS LINE