PACKARD TWIN ULTRAMATIC

Hudson, Hornet V8 (1956)
Nash, Ambassador V8 (1956)
Packard, All Models (1956)
Studebaker, Golden Hawk (1956)

►CHANGES, CAUTIONS, CORRECTIONS

►*1956 HUDSON & NASH ULTRAMATIC REAR OIL PUMP PROD. CHANGE:* A new rear pump driver, Part No. 6489292, which pilots in both the rear pump rotor and on the planetary shaft (to prevent brinnelling of the shaft) was used in production starting with transmission serial No. P-6492. *NOTE* -The brinnelling marks found on the planetary shaft will not affect its operation. It is therefore not necessary to change the rear planetary assembly when the new driver is installed as it will prevent contact of the rotor drive lugs and shaft.

►*1956 ULTRAMATIC CONTROL VALVE BODY AIR LEAKAGE CORRECTION:* This condition can cause erratic shifting and a high pitch whine from either or both oil pumps. Correct as follows: Lap the mating surfaces using crocus cloth laid on a surface plate or plate glass. When installing control valve assembly in transmission, tighten the bolts as indicated in "Transmission Reassembly" in 1955 Annual Data or later Manual edition.

►*1956 STUDEBAKER ULTRAMATIC LOW RANGE BRAKE PRODUCTION CHANGES:* Starting with Transmission Serial No. S-2463, the inner spring was eliminated and a new separator plate, Part No. 6489478 entered production. This change was made to overcome possible occurrences of engine "flare-up" or "runaway" during transmission upshift from low range converter to high range converter. To correct this condition on cars before Serial No. S-2463, install the later type separator.

►*1956 STUDEBAKER ULTRAMATIC HARSH BAND APPLICATION (On Transmission between Serial Nos. S-2463 and S-4028):* If this condition is apparent on transmissions between these serial numbers, install the low range brake inner spring, Part No. 470183).

►*LATE 1956 STUDEBAKER ULTRAMATIC LOW RANGE PRODUCTION CHANGE:* Beginning with Transmission Serial No. S-4028, the inner low range brake spring was reinstated, and is used with the later type separator plate. See Production Changes above.

►*1956 STUDEBAKER ULTRAMATIC TRANSMISSION FRONT PUMP CHECKING CAUTION:* In cases where the high range clutch burns out prematurely, or there is an engine "runaway" on low range converter to high range converter upshift, check the front pump for restrictions, as follows: Place complete pump assembly in a shallow pan with pump plate upward. Use a small funnel with the end reworked to fit the high range oil circuit hole of the pump plate (this hole is the fourth hole to left of pump plate screw having the five closely spaced holes adjacent to it. The other plate screw has only two closely spaced holes adjacent to it). Using automatic transmission fluid (temp. 65° to 75°F), pour enough fluid in funnel to fill the high range passage in the pump. Allow fluid to drain down to a level slightly above the funnel spout. At this time, pour an additional ½ pint of fluid in the funnel and observe the time required for fluid to reach the predetermined level. If more than 2 minutes and 15 seconds is required for the level to come up, the passage is restricted and the pump should be replaced.

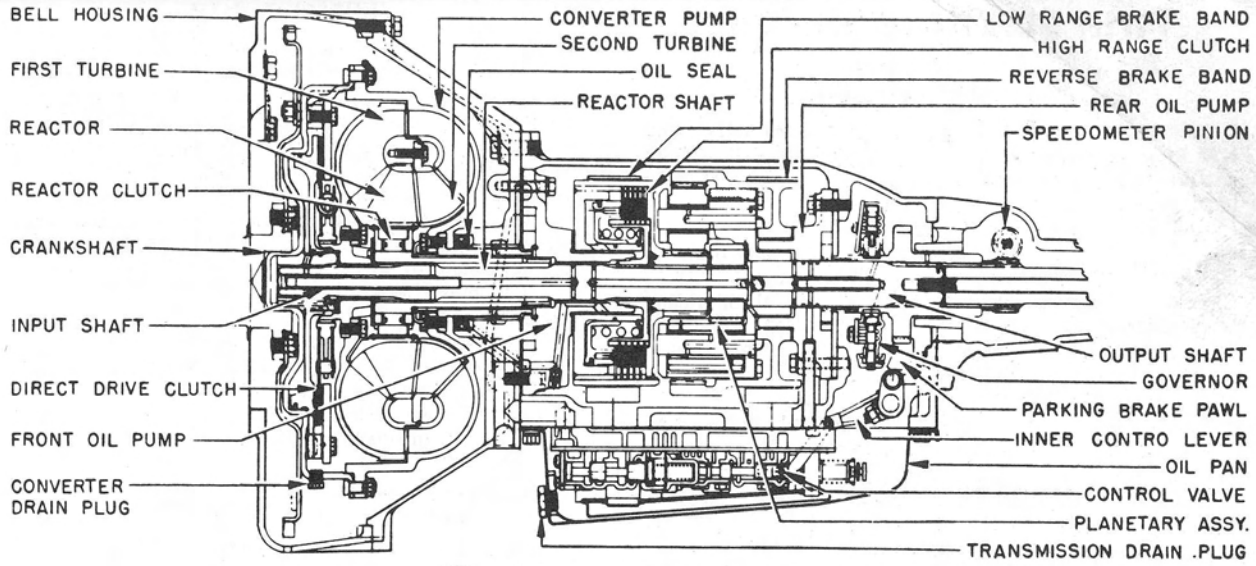

TWIN ULTRAMATIC DRIVE SECTIONAL VIEW

►*1956 STUDEBAKER ULTRAMATIC DIRECT CLUTCH PRESSURE PLATE ASSEMBLY PRODUCTION CHANGE:* Flat washers, No. 338405 are being installed under the heads of the direct clutch pressure plate bolts to prevent steel shavings (caused by bolt head digging into pressure plate) from falling into transmission. Install these washers at this location whenever work is performed on the direct clutch pressure plate assembly.

►*1956 STUDEBAKER ULTRAMATIC CONVERTER PUMP SHAFT AND TRANSMISSION FRONT PUMP ROTOR PRODUCTION CHANGE:* Beginning with Transmission Serial No. S-2463, a new converter pump shaft, (with splines controlled to provide an improved spline fit), and a new front pump rotor (with 40 splines instead of 20) were used. (*NOTE* - The early pump shaft had 40 splines, however, only 20 were used as the rotor had only 20 splines). When necessary to replace the early type front pump or a converter pump shaft, use Rotor Assembly and Pump Shaft Kit, Part No. 6484523, or Pump Assembly and Pump Shaft Kit, Part No. 6484524. On cars prior to Transmission Serial No. S-2463, use Converter, Part No. 6479085 when replacing only the converter.

►**TOWING TWIN ULTRAMATIC TRANSMISSION CARS:** Cars can be towed with selector lever in Neutral "N" position providing the Twin Ultramatic unit is not damaged and oil level in unit is normal. **Do not tow car at a speed greater than 30 MPH., or for any great distance.** If selector lever cannot be placed in Neutral, or if transmission oil level low, disconnect drive shaft at rear end and securely fasten to frame so it cannot move to the rear (*CAUTION*–Rearward movement will allow front end to slip off transmission main shaft splines and drop down).

►**STARTING ENGINE BY PUSHING CAR:** If this procedure required for Twin Ultramatic Cars, place selector lever in Neutral "N" position and turn on ignition. When car has attained a speed of 25 MPH., move selector lever to LEFT HAND "D" position. Engine will then crank.

DESCRIPTION

Twin Ultramatic Transmission is the same general design as used on 1955 Models. *See 1955 Annual Data or later Manual edition.*

►*1956 PACKARD ELECTRIC PUSH-BUTTON CONTROL NOTE:* This unit is standard equipment on Packard Carribean and optional equipment on other Packard models. *See "Packard Twin Ultramatic "Push-Button" Control" for service procedures and wiring diagram.*

The torque converter assembly automatically provides a torque multiplication ranging from approximately 2-1/3 to 1 (for starting and heavy loads) to a 1 to 1 ratio (for steady driving and light loads) and is locked out by the Direct Speed Clutch at speeds above 15 MPH in High Range operation under normal driving conditions (can be "Kicked down" at car speeds under 60 MPH). Planetary unit is manually controlled and provides definite gear ratios (in addition to the varying ratios of the Torque Converter) depending on selector lever position. This control is effected through the hydraulic control system by means of oil pressure supplied by front and rear oil pumps in transmission case.

CONTINUED ON NEXT PAGE

TWIN ULTRAMATIC (Cont.)

LUBRICATION

Check transmission fluid level every 1000 miles and add fluid as required to maintain level at FULL mark on dipstick. Drain and replace fluid at 25,000 mile intervals.

►*CAUTION: Fluid must only be checked at normal operating temperatures after 1 minute operation at 800 RPM with selector lever in "N" position.*

Checking Fluid Level—With fluid at normal operating temperature, place selector lever in "N" position, idle engine at 800 RPM to fill system, then run engine at low idle while level is being checked, using dipstick in engine compartment on left side.

►*NOTE:* If fluid level doubtful due to bent or distorted dipstick tube, check actual fluid level in transmission as follows: Place car on level floor and allow engine to run at idle speed for five minutes in "N" (Neutral). Place a pan under rear of transmission and remove plug in rear of transmission case. If no oil runs out of opening, add oil until it begins to run out, install plug, then ADD ONE QT. If oil does run out when plug removed at rear of transmission, allow to drain to level of hole, then ADD ONE QT.

Draining & Refilling—Remove flywheel housing lower cover and turn flywheel to bring a converter drain plug to the bottom. Place a container under converter and transmission oil pan and then loosen but do not remove converter drain plug. Rotate flywheel to bring the other drain plug to the bottom and remove this drain plug and also the oil pan drain plug and drain fluid. Remove oil filler tube, oil pan, and strainer and thoroughly clean and dry these parts (use compressed air to dry). Reinstall strainer, pan, and tube using new gaskets. Reinstall and tighten converter and oil pan drain plugs (make sure that the drain plug previously loosened is also tightened securely). Install flywheel housing lower cover and tighten retaining screws to 15-18 ft. lbs. (1954 cars), 25-30 ft. lbs. (1955 cars). Pour seven qts. of Automatic Transmission Fluid Type A through filler tube in engine compartment. Start engine and allow to run at HIGH IDLE speed for five minutes with transmission selector lever in "N" (Neutral) position. Bring engine to slow idle speed and add approximately two to three qts. of fluid, and then continue to add only enough to bring level to FULL mark on dipstick.

►*CAUTION: Determine amount of fluid installed by mark on dipstick rather than by number of qts. installed.*

Recommended Fluid—Packard Twin Ultramatic Transmission Fluid or any Automatic Transmission Fluid Type "A" having an AQ-ATF number and symbol embossed on the container.

LINKAGE ADJUSTMENT

►*THROTTLE LINKAGE ADJUSTMENT NOTE: See "Throttle Linkage" under "Carburetor" on Car Model pages.*

HUDSON & NASH

Selector Control Linkage Adjustment (Hudson & Nash V8): Place selector lever in "R" (Reverse). Disconnect transmission control lever from control rod at rear of transmission. Move transmission control lever to rear as far as it will go (do not force lever as it may bend stop plate within transmission). Adjust clevis on transmission control rod so that clevis pin fits freely in hole of clevis and transmission lever. Replace cotter key and tighten locknuts on control rod. *NOTE*—If necessary to align selector lever point on steering column, place selector lever in "N" (Neutral) position (noting position of pointer). Remove shroud from jacket tube by removing retaining screw at lower end of shroud and sliding shroud downward and turning upper end toward the right. Lift out of jacket tube. Hold pointer shaft with pliers and move pointer toward right or left on shaft to line it up directly under center of letter "N".

Neutral Safety Switch Adjustment: Adjust switch so starter is operative only in "N" and "P" position.

PACKARD

Selector Control Linkage Adjustment (All Packard): Disconnect forward end of transmission control rod at bellcrank (attached to frame side rail). Pull control rod to its full forward limit which will place the control manual valve in the reverse position. Pull lever at lower end of selector shaft downward to its full limit of travel so it contacts stop on lever bracket. Adjust turnbuckle in lower lever to bellcrank link so that the forward end of the control rod will enter bellcrank, and secure in this position.

Neutral Safety Switch Adjustment: Adjust switch so starter is operative only in "N" and "P" position.

STUDEBAKER GOLDENHAWK

Selector Control Linkage Adjustment: Disconnect clevis from forward end of control rod at bellcrank. Pull transmission rod to its full forward limit of travel by means of the bellcrank which will place manual valve in the reverse position. Pull control rod down to its full limit of travel. Adjust the clevis so the pin will freely enter clevis and bellcrank arm. Tighten clevis locknut and install cotter pin.

Neutral Safety Switch Adjustment: Switch is located at lower end of steering post jacket. Remove hand control-to-switch rod. Loosen screws attaching switch to jacket. Align pin hole in switch lever with corresponding hole in switch body. Install pin through holes to maintain alignment. Tighten attaching screws and install hand control-to-switch rod.

BAND ADJUSTMENT

►*ADJUSTMENT NOTE:* Adjusting screw and locknut for each band are located on left side of transmission case (Low Range Band), right side (Reverse Band). Both bands are adjusted alike as follows:

Adjustment: Loosen locknut on band adjusting screw and use a torque wrench to tighten adjusting screw (clockwise) to 20 ft. lbs. torque, then **back off adjusting screw 1-3/4 turns.** Tighten locknut.

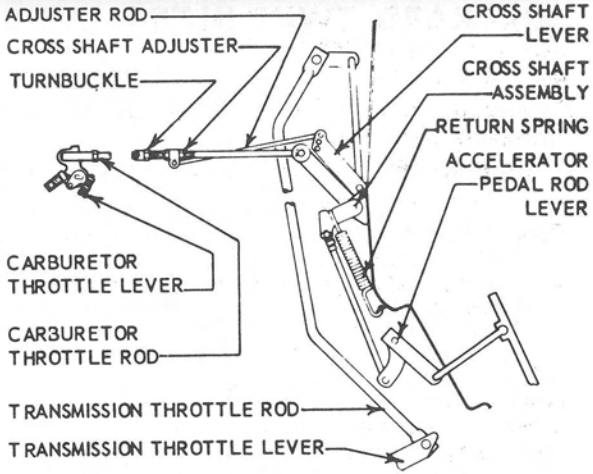

PACKARD THROTTLE LINKAGE

TROUBLE SHOOTING & DIAGNOSIS

CAR FAILS TO MOVE (Under conditions indicated below):

1) Car fails to move regardless of selector lever position.
(a) Insufficient oil or clogged inlet screen.
(b) Converter valve stuck or pump valve stuck.
(c) Selector control linkage disconnected.
(d) Transmission output shaft broken loose from planetary cage.
(e) Parking gear lever broken which may allow pawl to remain engaged in parking gear.
(f) Low and reverse bands adjusted too tight.
(g) Bushings or bearings seized in the transmission. Noise may or may not be present.

2) Car fails to move in "D" (Drive) range with selector lever in the gear starting position.
(a) Insufficient oil or clogged inlet screen. Loss of pressure to apply side of low range brake.
(b) Selector control linkage disconnected or out of adjustment.
(c) Low range brake band strut out of position or low range brake band badly worn.

3) Car fails to move in "D" (Drive) range with selector lever in high range clutch start position.
(a) Rubber lip seal on high range clutch piston out of position causing piston to leak.
(b) Shift regulator valve stuck or clutch plates worn or burned.
(c) Selector control linkage disconnected or out of adjustment.

4) Car fails to move with selector lever in "L" (Low) position.
(a) Selector control linkage disconnected or out of adjustment.
(b) Worn low range band or band strut out of position.
(c) Low range brake piston jammed or insufficient oil supply to apply side of low range brake.

5) Car fails to move with selector lever in "R" (Reverse) position.
(a) Selector control linkage disconnected or out of adjustment.

CONTINUED ON NEXT PAGE

TWIN ULTRAMATIC (Cont.)

(b) Worn reverse brake band or strut out of position.
(c) Manual valve stop inside transmission not adjusted properly allowing the manual valve to over-travel.
(d) Lack of oil to apply side of reverse brake piston caused by a stuck reverse shuttle valve.
(e) Reverse brake piston stuck in housing.

6) Excessive slippage in all driving ranges.
(a) Insufficient oil or low front pump pressure due to sticking pump valve.
(b) Low front oil pump pressure due to ball plugs being out of low range and reverse brake housings, or worn or badly scored pump rotors.
(c) Low oil pressure to the converter caused by a stuck converter valve.

7) Excessive drag in "D" (Drive) range using high range clutch start. Also drags in reverse but is all right on "L" (Low) range.
(a) Low range brake band too tight, or low range brake piston stuck and holding brake partly applied.
(b) Transfer tube to release side of low range brake out of position.

8) Excessive drag in both "D" (Drive) ranges. All right in "R" (Reverse) range.
(a) Reverse brake band too tight, or reverse brake piston stuck holding brake partly applied.

9) Car creeps forward in "N" (Neutral).
(a) Low range brake band too tight, or High range clutch plates sticking on splines.
(b) High range clutch piston rubber lip seal out of position causing piston to stick and partly engage clutch.
(c) Low range brake piston stuck holding brake partly applied.

10) Car creeps excessively in any driving range with the engine idling.
(a) Engine idling too fast.

11) Car creeps forward when selector lever is in "R" (Reverse).
(a) Manual valve linkage out of adjustment.

12) Car does not move with the selector lever in "R" (Reverse) position.
(a) Reverse shuttle valve stuck preventing the oil above the reverse brake piston from venting.
(b) Reverse brake band strut out of position.

13) Chatter when starting in "D" (Drive) range using high clutch start.
(a) Low range band dragging, or reverse band dragging.
(b) Worn, burned, or distorted high range clutch plates. Could also be caused by sticking plates or piston.

14) Chatter when starting in "L" (Low) range.
(a) Low range brake band out of adjustment, or reverse range band dragging.
(b) Sticking high range clutch plates or pistons.

15) Chatter when starting in "R" (Reverse) range.
(a) Reverse brake band out of adjustment, or low range band dragging.
(b) Reverse drum (ring gear) bushing badly worn.

16) Drive Clutch fails to engage.
(a) Sticking high speed governor valve, low speed governor valve or direct shift valve. Could also be caused by direct shift throttle valve sticking.
(b) Direct drive clutch piston sticking.

17) Direct drive clutch "hangs on" or fails to release on deceleration.
(a) Sticking direct shift valve or low speed governor valve.

18) Direct drive clutch engages late and disengages early.
(a) Direct shift valve spring "cocked" in valve bore.
(b) Direct shift throttle valve sticking open.

19) Direct drive clutch slips.
(a) Excessive slippage in direct drive clutch circuit.
(b) Sticking converter valve resulting in high converter pressure while in direct drive.

20) Transmission remains in low range using gear start "D" (Drive) position. Will not upshift from low range converter to high range converter.
(a) Sticking low-high shift valve or sticking governor valves.
(b) Sticking throttle valve.

21) Incorrect front oil pump pressure.
(a) Low oil level or sticking pump valve.
(b) Ball plugs missing in reverse brake housing.
(c) Sticking pump check valves, or incorrect valve spring. Sticking modulator valve.

22) Incorrect high range clutch pressure.
(a) Sticking shift regulator valve, or sticking low-high shift valve. Incorrect pump pressure.

23) Incorrect low range brake top pressure.
(a) Ball plug missing in low range brake housing.
(b) Sticking low-high shift valve, or incorrect pump pressure.
(c) Threaded plug missing in low range brake housing.

24) Incorrect converter "IN" pressure.
(a) Incorrect front pump pressure.
(b) Sticking converter valve.
(c) Loss of pressure in the converter circuit caused by loose or worn bushings.

25) Incorrect direct drive clutch pressure.
(a) Sticking low or high speed governor valves.
(b) Worn or leaking direct drive clutch piston rings.
(c) Loss of pressure through direct drive clutch circuit caused by loose or worn bushings.

26) Incorrect governor pressure.
(a) Sticking low or high speed governor valves.
(b) Governor plate not properly installed.

27) Incorrect throttle pressure.
(a) Throttle pressure adjusting screw not properly set.
(b) Throttle linkage not properly set or is binding.
(c) Throttle valve sticking.

HYDRAULIC PRESSURE TESTS

►*NOTE:* Before making following tests, check fluid level in transmission. Road test car by driving under conditions simulating heavy traffic and highway operation (frequent stops and starts, low speed, medium speed, and accelerating). If transmission does not operate satisfactorily after engine and transmission thoroughly warmed up, make hydraulic tests as outlined below.

►*SPECIAL HYDRAULIC TESTING TOOL NOTE:* For Nash & Hudson, use Tool Set J-5975. For Packard models, use Tool Set PU-300, and Pan Adapter PK-23. These tool sets are comprised of gauges, fittings, flexible tubing, and special pan adapters.

TEST GAUGE INSTALLATION (HUDSON & NASH): Fold floor mat away from left side of front seat to uncover floor hole cover. Remove cover and insert flexible pressure gauge lines supplied with Tool J-5875 to the transmission. Remove plug in transmission and connect line fitting to correct passage for desired hydraulic test (see Test Plug Location in illustration).

TEST GAUGE INSTALLATION (PACKARD): Remove flexible tubing from left hand fresh air duct and thread gauges through the fresh air grille, out of air duct and down to transmission. Attach hoses to desired points on transmission (see Test Plug Location in illustration).

FRONT PUMP PRESSURE: Connect gauge to front pump test point at front of transmission case (left side). On all models, operate engine at 400 RPM. Normal oil pressure should be 80-95 lbs. (1954 Packard). 80-110 lbs. (Others), with selector lever in all positions.

With Selector Lever in •D Range—Drive car at 15-20 MPH. Maximum pressure should be 150-160 lbs. (1954 Packard). 150-170 lbs. (Others), at full throttle before Direct Drive Clutch engages.

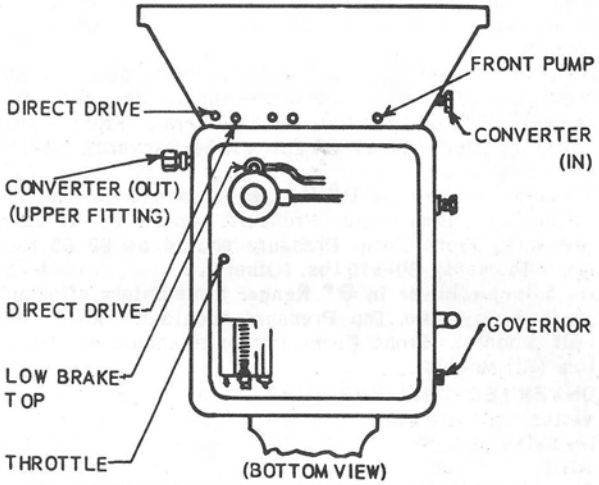

TWIN ULTRAMATIC HYDRAULIC TEST POINTS

With Selector Lever in D• Range—Maximum pressure should be 140-150 lbs. (1954 Packard). 80-120 lbs. (1955 Packard). 140-160 lbs. (Nash & Hudson), at full throttle before Direct Drive Clutch engages.

With Selector Lever in L Range (1955 Packard): Drive car at 25 MPH. Pressure should be 120-130 lbs., at full throttle.

HIGH RANGE CLUTCH PRESSURE: *(NOTE—Leave gauge connected for "Front Pump Pressure" test above).* Connect another gauge to high range clutch pressure point at front of transmission (right side). In the following tests, High Range Clutch Pressure should be the same or not more than 10 lbs. under Front Pump Pressure.

With Selector Lever in •D Range: Operate engine at 400 RPM. High Range Clutch Pressure should be 75-90 lbs. (1954 Packard). 70-100 lbs. (1955 Packard). 70-110 lbs. (Hudson & Nash). Front Pump Pressure should be 80-95 lbs. (1954 Packard). 80-110 lbs. (Others).

CONTINUED ON NEXT PAGE

TWIN ULTRAMATIC (Cont.)

With Selector Lever in •D Range: Drive car at 15-20 MPH (Converter Drive). High Range Clutch Pressure should be 145-155 lbs. (1954 Packard). 145-165 lbs. (Others). Front Pump Pressure should be 150-160 lbs. (1954 Packard). 150-170 lbs. (Others).

With Selector Lever in D• Range: Operate engine at 400 RPM. High Range Clutch Pressure should be at Zero pressure. Front Pump Pressure should be 80-95 lbs. (1954 Packard). 80-110 lbs. (Others).

With Selector Lever in D• Range: Drive car at 20 MPH (Direct Drive) with a steady throttle. High Range Clutch Pressure should be 55-65 lbs. (All Models).

LOW BRAKE TOP PRESSURE: *(NOTE—The pressure point for this test and for Throttle Pressure is located on the control valve assembly. A special oil pan adapter is used and a special procedure is required. Connections for both tests should be made at the same time. See "Low Brake Top Pressure & Throttle Pressure Test Connection Note" below).* Pressure should be the same or not more than 10 lbs. under Front Pump Pressure.

With Selector Lever in •D Range: Operate engine at 400 RPM. Low Brake Top Pressure should be 75-90 lbs. (1954 Packard). 70-100 lbs. (Others). Front Pump Pressure should be 80-95 lbs. (1954 Packard). 80-110 (Others).

With Selector Lever in D• Range: Operate engine at 400 RPM. Low Brake Top Pressure should be at Zero pressure. Front Pump Pressure should be 80-95 lbs. (1954 Packard). 80-110 lbs. (Others).

With Selector Lever in D• Range: Immediately after upshift, Low Brake Top Pressure should be 40-65 lbs. (All Models). Front Pump Pressure should be 50-70 lbs. (All Models).

CONVERTER "IN" PRESSURE: Connect gauge to converter "in" test point at left side of converter housing.

With Selector Lever in D• Range: Operate engine at 400 RPM. Pressure should be 60-70 lbs. (1954 Packard). 30-50 lbs. (Others).

With Selector Lever in D• Range: Drive car at 15 MPH., (before Direct Drive). Pressure should be 70-80 lbs. (1954 Packard). 55-80 lbs. (Others).

With Selector Lever in D• Range: Drive car at a speed to engage Direct Speed Clutch. Pressure should be 15-25 lbs. (All Models) with Direct Drive engaged.

With Selector Lever in D• Range: In "kickdown" position, converter pressure should be 70-80 lbs. (1954 Packard). 70-85 lbs. (Others).

CONVERTER "OUT" PRESSURE: To check converter "out" pressure a special tee connection is required (install and braze a 1/8" nipple into one end of the 1/8" tee). Remove upper oil cooler tube adapter from side of bell housing. Install oil cooler tube adapter in the tee and reconnect cooler tube. Connect gauge to tee connection.

With Selector Lever in D• Range: Drive car at 15-18 MPH. In "Converter Drive" pressure should be 30-40 lbs. (1954 Packard). 25-40 lbs. (Others). In "Direct Drive" pressure should be 10-20 lbs. (All Models).

DIRECT DRIVE PRESSURE: Connect gauge to direct drive test point at front of transmission (right side), and another gauge to front pump test point at front of transmission (left side). Direct drive pressure should be the same or not more than 10 lbs. under front pump pressure.

With Selector Lever in D• Range: Drive car at 15-18 MPH. Front Pump Pressure should be at Zero pressure (All Models), before Direct Drive Clutch engagement. Front Pump Pressure should be 80-95 lbs. (1954 Packard). 70-100 lbs. (Others). After Direct Drive Clutch engagement, pressure should be 55-65 lbs. (All Models). After "kickdown", Direct Drive Pressure should be at Zero pressure. Front Pump Pressure should be 140-160 lbs. (All Models).

GOVERNOR PRESSURE: Connect gauge to governor pressure test point on left side of transmission case (rear). Pressures should be as follows:

1954 Packard, Hudson & Nash—15-20 lbs. at 13 MPH. 30-35 lbs. at 28 MPH. 55-65 lbs. at 56 MPH.

1955 Packard—15-18 lbs. at 13 MPH. 35-40 lbs. at 28 MPH. 62-69 lbs. at 56 MPH.

THROTTLE PRESSURE: *(NOTE—The pressure point for this test and for Low Brake Top Pressure is located on the control valve assembly. A special pan adapter is used and a special procedure is required. Connections for both tests should be made at the same time. See "Low Brake Top Pressure & Throttle Pressure Test Connection Note" below).* Operate engine at 400 RPM. Throttle pressure should be 20-25 lbs. (1954 Packard). 23-26 lbs. (Others). At Full Throttle, pressure should be 65-72 lbs. In "kickdown" (before downshift), pressure should be 80-95 lbs. (All Models).

Throttle Pressure Adjustment: Before adjusting throttle pressure, check all of the throttle linkage adjustments (see "Throttle Linkage Adjustment" above). The throttle pressure adjusting screw can be reached from the right side of the transmission case with the Oil Pan Adapter, PK-23 (Packard), or Oil Pan Adapter, J-5975 (Nash & Hudson) in place as described in "Low Brake Top Pressure & Throttle Pressure Test Connection Note" below. Use two wrenches through opening. Loosen locknut and turn adjusting screw to obtain correct throttle pressure (see "Throttle Pressure" above). Be sure to recheck throttle pressure after locknut is tightened.

►*LOW BRAKE TOP PRESSURE & THROTTLE PRESSURE TEST CONNECTION NOTE:* These two connections are located on the throttle control valve assembly within the transmission oil pan. Drain transmission fluid and remove transmission oil pan and screen. Install special test pan adapter, PK-23 (Packard), J-5975 (Nash & Hudson), with the adapter tube on the left side and toward front of car. Thread two of the gauge hoses through elbow tube on the adapter. Remove the 1/8" pipe plug from bottom of low brake housing and install a 1/8" elbow. Connect gauge hose. Remove 1/8" pipe plug from throttle valve body, install a 1/8" elbow and connect other gauge hose. On Packard, install the two oil suction tube extensions to suction tubes, install oil pan and gasket and replace transmission fluid.

TRANSMISSION REMOVAL

HUDSON & NASH

►*NOTE: The transmission and converter are removed from the chassis as an assembly.*

1) Raise car on lift or raise car at both ends and support it with jack stands under side sills. Drain fluid from transmission and converter assembly *(see "Draining & Refilling" above).*

2) Disconnect torque tube and propeller shaft from transmission. Disconnect throttle valve linkage and selector control linkage at transmission. Disconnect speedometer cable and cooler lines at transmission.

3) Support engine at rear using a support beam across frame channels or with a large block and hydraulic

CONTINUED ON NEXT PAGE

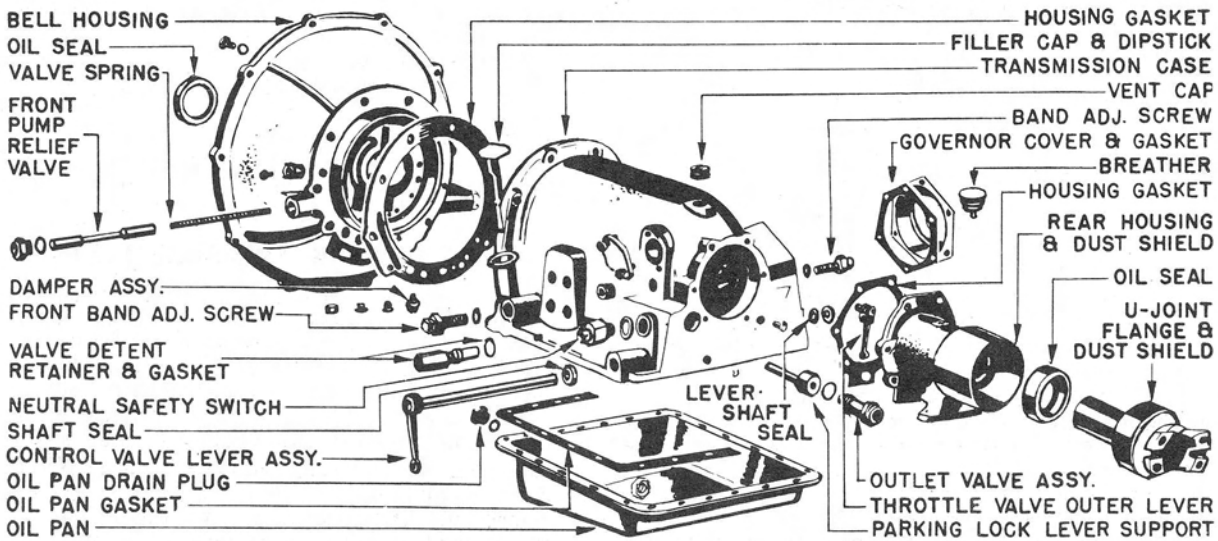

TWIN ULTRAMATIC TRANSMISSION CASE ASSEMBLY

jack under rear end of engine oil pan. Raise engine and transmission just enough to take load off rear support under transmission rear housing. Remove the insulator to support nuts and washers and then remove the support to cross member bolts and remove support.
4) Place a transmission lift under transmission with the lift adapter properly positioned around oil pan. Pick up transmission load by slightly raising the lift.
5) Remove direct drive clutch housing to flywheel retaining nuts and slide converter assembly toward transmission. Remove the bell housing to flywheel capscrews and then move transmission rearward until the direct drive housing is clear of the flywheel. Wire converter assembly to bell housing so that it cannot accidentally slide off the input shaft.
6) Lower transmission lift and pull it from under car. Transfer transmission assembly to a reconditioning stand.

PACKARD

NOTE: Transmission and converter are removed from chassis as an assembly.

1) Raise car on lift or raise car at both ends and support with jack stands under side sills. *(CAUTION—Do not place jack or other lifting device under rear load arms or any other part of Torsion Level Suspension assembly).*
2) Disconnect propeller shaft at both ends and remove shaft. Disconnect throttle valve linkage and selector control linkage at transmission. Disconnect speedometer cable and cooler lines at transmission.
3) Support engine at rear using a support beam across frame channels or with a large block under rear of engine oil pan and a hydraulic jack. Raise engine and transmission just enough to take the load off rear support under transmission rear housing. Remove insulator to support nuts and washers and then remove the support to "X" member bolts and remove the support.
4) Place a transmission lift under transmission with lift adapter properly positioned around the oil pan. Pick up the transmission load by slightly raising the lift. Remove direct drive clutch housing to flywheel retaining nuts and slide converter assembly toward transmission.
5) Remove the bell housing to flywheel housing capscrews and then move transmission rearward until the direct drive clutch housing is clear of flywheel. Wire the converter assembly to bell housing so it cannot accidentally slide off input shaft.
6) Lower transmission lift and pull it from under the car.

STUDEBAKER GOLDENHAWK

1) Remove cable from positive battery terminal. Raise car on hoist to provide working clearance and remove left exhaust pipe. Disconnect wires from starter motor. Remove flywheel housing lower cover retaining capscrews and remove lower cover.
2) Rotate engine flywheel until one converter drain plug is at bottom and loosen, but do not remove the drain plug. Rotate flywheel 180° and remove other drain plug. Remove transmission drain plug. Replace and tighten all plugs after converter and transmission drained.
3) Disconnect front propeller shaft at transmission companion flange and tie to right side of frame out of the way. Disconnect throttle valve and manual valve linkage at transmission. Disconnect selector to bellcrank linkage by removing the cotter pin from clevis at bellcrank. Remove bolts and nuts holding bellcrank to transmission bracket, and to frame bracket and remove bellcrank. Disconnect speedometer cable and transmission cooler lines. Remove dipstick tube.
4) Support engine at rear using a support beam across frame channels or with a large block under rear end of engine oil pan and a hydraulic jack. Raise engine and transmission enough to take load off rear engine support cross member under the transmission rear housing. Remove cross member retaining bolts and slide cross member to rear.
5) Remove body front pillar support cross member. Place transmission jack under transmission with saddle adapter J-6316, properly positioned around oil pan. Take up transmission load slightly by raising jack. Remove direct drive clutch housing-to-flywheel retaining nuts and slide converter assembly toward transmission. Remove bell housing-to-flywhe el housing capscrews and then move transmission rearward until direct drive clutch housing is clear of flywheel. Wire converter assembly to bellhousing so that it cannot slide off the input shaft.
6) Lower transmission on jack and pull jack and transmission from under car. Remove bellcrank bracket from transmission. Remove converter and place on bench.

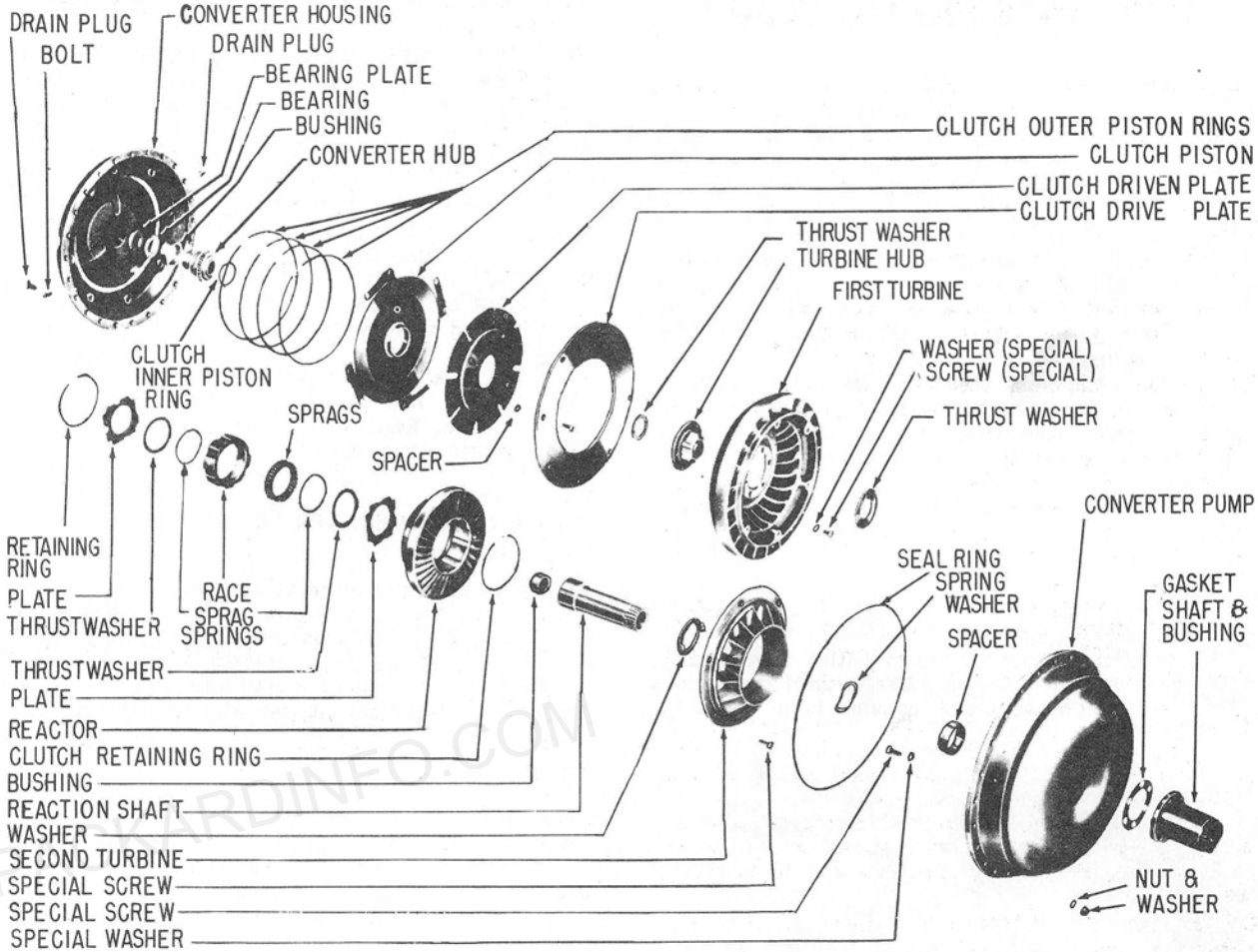

TWIN ULTRAMATIC TORQUE CONVERTER ASSEMBLY

TRANSMISSION INSTALLATION

HUDSON & NASH

1) Wire converter assembly to bell housing to prevent it from slipping off input shaft while moving transmission. Install transmission on lift or jack. Place under car and raise it until pilot at front of direct drive clutch housing is in a line with bore in crank-

CONTINUED ON NEXT PAGE

shaft. Move transmission forward so that pilot enters crankshaft while at the same time the four studs on clutch housing enter holes in flywheel. Start two of the converter to flywheel retaining nuts and remove wire holding converter to bell housing.

2) Raise transmission until pilot around top of bell housing flange is right to top of flywheel housing. Install the lower flywheel housing cover and starting motor. Install all bell housing to flywheel housing retaining bolts and tighten to 25-30 ft. lbs. Install the other two converter to flywheel nuts and tighten to 25-30 ft. lbs.

3) Attach rear cross member to the engine supports and side sills. Connect torque tube and universal joint to rear transmission housing and output shaft. Remove the support from under engine and lower the jack from under transmission.

PACKARD

1) Wire converter assembly to bell housing to prevent it from slipping off input shaft while moving transmission. Using a jack or other lifting device, place transmission under car and raise it until the pilot on front of direct drive clutch housing is in direct line with bore in crankshaft. Move transmission forward so pilot enters the crankshaft while at the same time the four studs on clutch housing enter holes in flywheel. Start two of the converter to flywheel retaining nuts and remove wire holding converter to bell housing.

2) Raise transmission until the pilot around top of bell housing flange is tight to the top. The dowel in the flywheel housing positions the bell housing properly in relation to flywheel housing. Install all bell housing to flywheel housing retaining bolts and tighten to 25-30 ft. lbs. Install the two remaining converter to flywheel retaining nuts and tighten to 25-30 ft. lbs.

3) Assemble flywheel housing lower cover to flywheel housing and tighten the bolts to 15-18 ft. lbs. Attach rear support to "X" members. Lower transmission lift and the jack supporting the engine and then install transmission rear housing insulator to support nuts and washers. Remove jack from under engine and the lift from under transmission.

STUDEBAKER GOLDENHAWK

1) Install converter on input shaft of transmission and wire to bell housing to prevent it sliding off during installation. Place transmission on jack and adapter. Install bellcrank bracket on transmission. Move transmission under car and raise until pilot on front of direct drive clutch housing is in line with bore in crankshaft.

2) Move transmission forward so that pilot enters hole in crankshaft while at same time, the four studs on converter housing enter holes in flywheel. Start two of the converter-to-flywheel retaining nuts and remove wire holding converter to transmission.

3) Install all bellhousing-to-flywheel housing retaining capscrews and tighten to 25-30 ft. lbs. Install two remaining converter-to-flywheel retaining nuts and tighten all retaining nuts to 25-30 ft. lbs. Install oil filler tube on transmission and connect speedometer cable and cooler lines to transmission.

4) Install body front pillar support cross member and install engine support cross member. Lower engine and transmission and install rear engine support nuts and washers. Lower transmission jack and remove from car.

5) Connect front propeller shaft to transmission companion flange. Position selector bellcrank on transmission bracket and on frame bracket and install retaining nuts and bolts. Connect selector and throttle control linkage to transmission levers. Assemble flywheel front cover to flywheel housing and install capscrews. Tighten to 25-30 ft. lbs. Install left exhaust pipe. Lower car and fill transmission with Automatic Transmission Fluid. Adjust manual and throttle control linkage.

TRANSMISSION OVERHAUL

OVERHAUL: Procedures are the same as for 1955 Models. *See 1955 Annual Data or later Manual edition and see "Changes, Cautions, Corrections" above.*

PUSH BUTTON CONTROL

Clipper (1956), Optional
Packard, Exc. Carribean (1956), Optional
Packard Carribean (1956), Standard

►CHANGES, CAUTIONS, CORRECTIONS

►*1956 ELECTRIC PUSH BUTTON CONTROL PRODUCTION CHANGE:* In later production, the Battery Relay is eliminated (see wiring diagrams).

►*MOVING CAR WITH ENGINE NOT RUNNING CAUTION:* With ignition off, transmission will be in "Park" position and rear wheels will be locked (Transmission goes into "Park" automatically when ignition turned off). To move car without starting engine, turn ignition ON, press "N" button, **leave ignition on while moving car.**

DESCRIPTION

A "Six Button" control panel mounted on the steering column controls a reversible type motor and gear assembly which is mounted on the transmission and connected to the manual valve lever shaft. When a control panel button is depressed, the electric motor on the transmission automatically positions the manual valve in the transmission to the selected position. When ignition switch is turned off, transmission will automatically be in "Park" position and rear wheels will be locked. The engine cannot be started until "N" or "P" button is depressed.

ADJUSTMENT

The only adjustment required on the unit is the "Anti-hunt" feature. A rapid series of clicks, as the unit completes a shift will indicate necessity of adjustment. Adjusting screw located in end of actuator housing.

Adjustment: Back off armature thrust screw (small center screw) several turns (unit should hunt in any one of several positions). If hunting does not occur back off the outer adjusting screw (large) slightly and tap side of motor with a soft hammer while moving from "R" to "P" and "P" to "R". Continue to back out adjusting screw until hunting occurs. Gradually tighten the outer adjusting screw ¼ turn at a time until unit no longer hunts *(NOTE - Do not allow motor to hunt for long periods as it will become hot enough to affect the adjustment).* As proper adjustment is neared, unit will not hunt continuously out will make several oscillations at one or more positions. This is the proper adjustment on the bench. If unit is on the transmission, the proper adjustment is ¼ turn beyond point where unit does not oscillate. *(CAUTION - Do not over-adjust as an unnecessary load will be placed on the motor).* Lock jam nut firmly. Adjust armature endplay by screwing the center screw in until it is firmly against shaft, **then back screw out one full turn.**

TROUBLE SHOOTING

FAILURE TO START: With ignition on, connect test lamp between terminal No. 3 (red lead) of starter relay and ground. If lamp does not light, the lead from push button, or push button contact is open. Connect test lamp to No. 2 terminal (brown lead) and operate starter switch. If lamp does not light, the ignition switch or lead from ignition switch to relay is open. Connect test lamp to No. 1 terminal (brown lead) and operate starter switch. If lamp does not light, the relay is defective. If lamp lights, the starter switch or its lead is defective.

FAILURE OF BACK-UP LIGHTS: Check lamps and line fuse. Connect test lamp from dark green lead to ground and press "R" button. If lamp does not light, the dark green lead has an open circuit, loose connection or a poor contact in push button. If lamp lights, the wiring to back-up lights or their sockets is at fault.

FAILURE TO SHIFT TO "R", "N", OR "P": Pressure switch is open. Pull orange wires with Douglas terminals from pressure switch mounted on side of transmission near actuator. Connect these together (protect from ground). If the actuator performs normally, replace the pressure switch. If there is an open circuit in the orange lead, inspect for open or broken lead. This is most likely to occur at the cable connector near driver's side of firewall. Be certain that all terminals are pushed into the connector. Use a small screw driver to force any exposed brass terminal ends into place.

FAILURE TO SHIFT TO "H", "L" OR "D": Check the red wire with a white tracer. If there is an open circuit in this wire, check in the same manner as for orange wire (above).

OVERHAUL

PUSH BUTTON CONTROL UNIT & WIRING HARNESS: **Removal** – Disconnect connector at rear side of firewall *(CAUTION - Mark location of wire terminals to insure installation in same location),* and remove wires and terminals from connector by pressing in on lip of the terminal with a small screwdriver and pulling wire and terminal through the connector. Remove all wires and terminals. Disconnect dark green, red, and black wires at steering column from individual bullet type connectors. Remove the four bolts clamping control housing to column and remove the two halves. Guide wires into lower openings in column and carefully pull them (one at a time) through the column.

Installation: Install wires through opening in steering column one at a time after lubricating each wire with lubriplate. A piece of stove pipe wire can be used to pull the individual wires through steering column and out through the opening. Be extremely careful when installing the halves of the switch housing on steering column so as not to pinch the wires when the four bolts are tightened. Install the wires in the connector at the same locations from which they were removed. Make sure the open side of the crimp on the connector terminal is next to the wide flat in the connector (the crimp section of the terminal is the part that crimps over the insulated part of the wire). Push the connector on the firewall connector. Connect the dark green, red, and black wires (at steering column) to their individual bullet type connectors. *NOTE* – To remove wires from the front half of the fire wall connector, release the terminal lock by inserting a small thin-bladed screw driver into connector and press down on lock while pulling on the wire. Make sure that wires are marked for installation in the same location in connector.

TRANSMISSION SHIFT ACTUATOR UNIT: **Removal** – 1) Disconnect tan and yellow leads from parking relay (this will prevent automatic shifting to "Park" when ignition is turned off). Turn on ignition and press the "R" button (this will position sector with the setscrew pointing downward). Turn off ignition. *(NOTE* - If setscrew cannot be positioned downward because of faulty wiring, or other causes, it will be necessary to remove the shift control motor and turn worm gear shaft with a suitable tool). *(CAUTION - When removing the motor, be careful and not allow the worm shaft to come out with the motor as the brake plates and thrust ball bearings will fall out of place).*

2) Remove wiring harness connector from forward side of firewall and disconnect leads from motor reversing relay. Disconnect green lead, orange lead, and red with white tracer lead from battery relay (if early production); from circuit breaker (if later production). Disconnect the two wires from pressure switch on side of transmission.

3) Remove plate from lower side of actuator gear housing. Loosen setscrew locknut and remove setscrew. Disconnect the front universal joint. Jack up rear of engine and remove transmission tail shaft and housing. Disconnect speedometer cable. Using a pry bar or jack, move rear of engine to the right as far as possible. Remove the capscrew holding actuator unit to side of transmission and slide assembly outward off valve lever shaft.

Disassembly & Inspection: **Motor** – Remove two through bolts and tap motor housing to free it from casting. Withdraw motor housing with care to prevent the slip joint coupling at end of motor shaft from sliding the worm gear shaft out of the gear box. Inspect inside of motor for signs of overheating such as excessive discoloration of the insulation or heavy deposits of varnish on metallic parts. Inspect brushes and commutator for wear and discoloration. Clean commutator and clean brushes as necessary. Connect an ammeter and voltmeter to the green and brown motor leads to measure amperage draw of right field coil. Repeat test on left coil by connecting green and grey motor leads. Replace field coils if draw is not within specifications or if they test grounded (see "Motor Test Specifications" below). Inspect armature for signs of open coils or damage *(NOTE - Do not test for shorts on growler as connections in the armature will cause it to show shorts on the usual growler test).*

Gear Box Unit – 1) Remove external cover plate. Fit the armature and its coupling on worm gear shaft and rotate shaft by hand. The shaft should turn freely and smoothly except at each end of segment stroke. A torque in excess of two inch-pounds or a feeling of stickiness is abnormal and the cause should be corrected. *(CAUTION - Do not turn armature far enough to allow contact fingers to leave end of contact segment).*

2) Inspect electrical switch assembly for signs of excessive wear or damage to contact fingers. Check for looseness of contact fingers and make sure insulation on wires is in good condition. If necessary to disassemble switch, remove screws retaining contact finger assembly. Fingers should be smooth and clean and all have the same shape. All fingers should be properly aligned in their slots.

3) To remove contact segment, remove snap ring and slide segment from shaft. The surface of outer rim of

CONTINUED ON NEXT PAGE

PUSH BUTTON CONTROL (Cont.)

contacts should be smooth and clean. The gap between segments should not exceed .078" and the radius of segment corners should not exceed .040".

4) Remove base plate with or without switch installed. If contact plate has been removed the sector gear will be left in the housing and can be inspected in the assembled position. The worm and sector should be coated with lubricant. There should be at least .010" backlash at worm. Turn sector gear to the right which should cause free motion against the spring. Rotation of the worm shaft should cause a limited motion of the fibre brake plate. Remove sector gear and wash in solvent.

5) Remove worm shaft slowly being careful not to cause any damage to coupling end. This will allow the various components of "anti-hunt" system and worm to be removed. Wash parts in solvent. Inspect fibre brake plate for abnormal wear or scuffing. Examine the notch for broken ears or edges. Check for a free sliding fit on worm shaft. Place fibre in a cup of clean SAE 20 oil to allow to soak until ready for reassembly.

6) Inspect the steel brake washers. These should have a smooth polished surface. The internal lug should be free of burrs and the whole unit should slide freely on the worm shaft. Inspect worm, ball thrust bearing, thrust plates, and spring for wear or damage.

Reassembly & Testing: Brake Assembly – Loosen jam nut and back out the outer adjusting screw at end of worm shaft until the end is about even with inside of housing. Insert the worm shaft partly into left bearing of casting. As the end is gradually moved into place, install the various components in the following order: Place spacer on shaft with its narrow diameter next to casting wall. Remove brake plate from oil and shake off excess oil. Place plate on shaft with notched end engaged on boss of casting. Install one of the 1/16" steel brake discs or two 1/32" discs on worm shaft so that lug engages keyway. Install the worm and its key. Slide thrust ball bearing, consisting of ball assembly between two thrust plates, in position on shaft. Place spring and its thrust washer on shaft and slide shaft into position.

Motor Unit – Place gasket in position on commutator end head. Install brushes in their holders and insert armature into commutator end bearing. Release brushes and inspect to see that they seat properly on commutator. Place commutator end head in position on frame. With gasket in place on shoulder of gear housing, move motor into position engaging first the armature coupling with worm shaft, then locating pin in the motor frame with slot in casting. Install through bolts and tighten securely. As the bolts are tightened, strike motor frame several sharp blows with a soft hammer to align motor and bearings.

Motor Testing – Screw armature thrust screw firmly against shaft, then back out one full turn. Do not screw the outer adjustment screw in as this will place tension on the brake. Connect motor for a no load test with an ammeter in series between green lead and a 12 volt battery, and ground brown and red leads. Connect a voltmeter from green lead to ground. The motor should operate clockwise at the drive end and its current and speed should be within specifications. Change hookup so that grey and red leads are grounded. The motor should turn counter-clockwise and be within specifications. If motor does not operate according to specifications it indicates faulty fields, armature, brushes, hookup, or drag on armature.

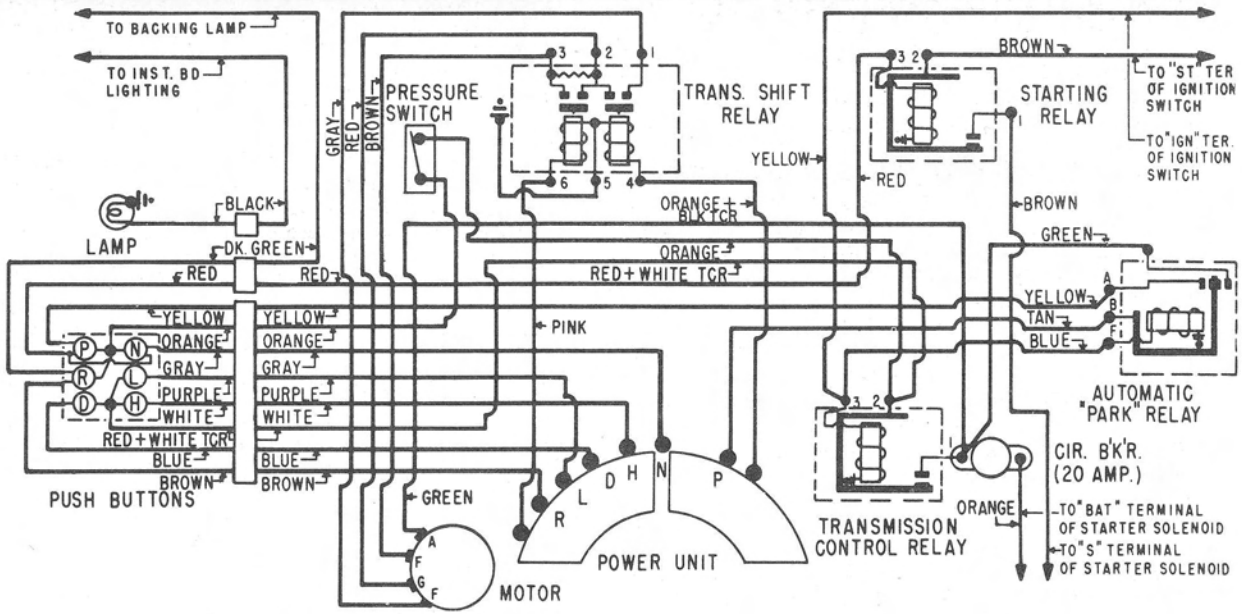

TWIN ULTRAMATIC PUSH BUTTON CONTROL WIRING DIAGRAM (FIRST TYPE)

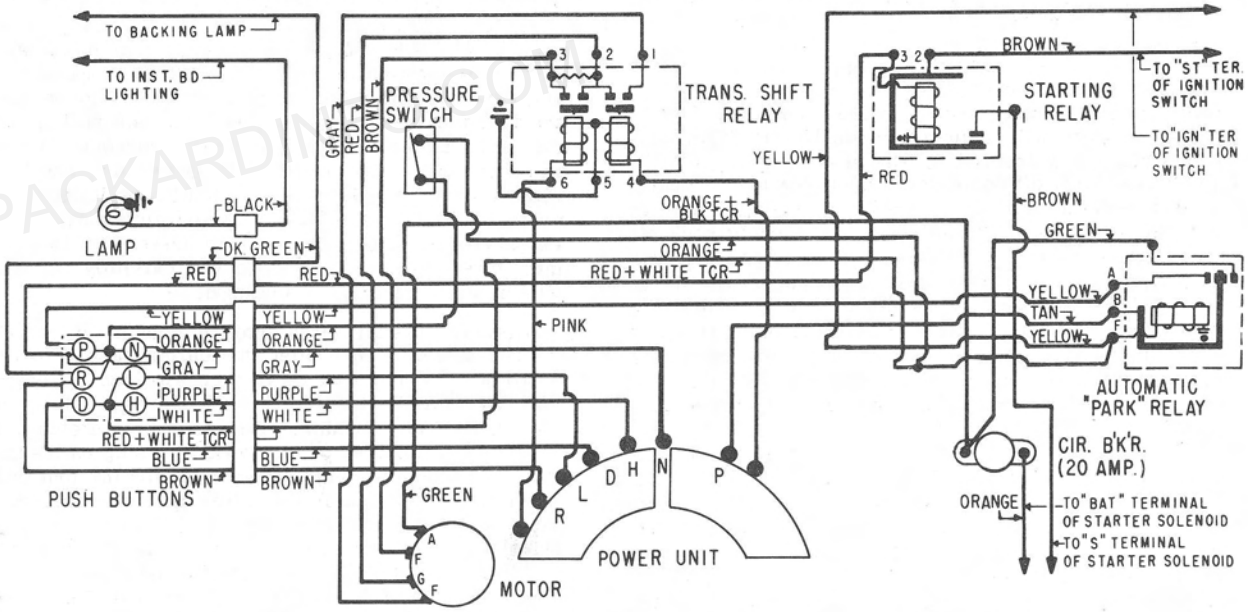

TWIN ULTRAMATIC PUSH BUTTON CONTROL WIRING DIAGRAM (LATER TYPE)

Motor Test Specifications
(Auto-Lite EPR-4001)

Field Coil Draw – 3.5-3.8 amps. at 10 volts (each coil) at 70° F.

No Load Draw – 12.0 volts, 45 amps., 1020 RPM (Min.).

Test with sector gear removed and with brake adjustment backed off to relieve tension. Test in both directions.

Stall Test – 12.0 volts, 65 amps. (Max.), 23 Oz. Ft. Torque (Min).

Motor Lubrication – Soak armature shaft bearings and felts in SAE 10 motor oil at overhaul. Pack gear chamber with 1½ ozs. clutch lubricant. Coat sector shaft and bearing with clutch lubricant.

CONTINUED ON NEXT PAGE

PUSH BUTTON CONTROL (Cont.)

Switch Assembly – Install sector gear with notched end of hub up and with approximate center of gear engaged with the worm. Rotate worm shaft to check for freedom of movement. Lubricate worm and sector gears with 1½ ozs. clutch lubricant. Install base plate and its gasket, holding it in place with the two topmost screws. Check for proper engagement with locating dowel pin. Use care to insure a good gasket seal. Mount contact segment on hub and lock in place with the snap ring. Carefully install contact finger assembly by inserting three screws through assembly. Slide assembly toward contact sector until contact fingers touch the sector. Cautiously align screws with holes and hold firmly while screws are tightened. Inspect carefully that the contact fingers are all lying across contact rim and that none have slipped out of place. Carefully tuck each wire under contact assembly so that none will rub against back of contact finger or be pinched by cover. Mount cover plate and gasket and tighten all screws evenly and securely. Make sure grommet fits into cover plate properly, and that base plate is correctly located on the dowel pins and that gasket is in place. Connect wires to connector and in correct positions.

Installation: Be sure actuator is in reverse position. Connect the leads as indicated in wiring diagrams, except leave the tan lead disconnected from parking relay. Turn on ignition and press the "R" button. Turn off ignition. Manually turn transmission shifter valve to the reverse position. Slide actuator unit into position and tighten the dog point screw. Be careful to set this screw as tightly as possible. Remove jam nut as necessary to secure full purchase on setscrew slot. When tight, lock securely with jam nut. Fasten inspection plate and gasket firmly in place. Engage the mounting stud with actuator and install mounting nuts. Before tightening the mounting nuts, turn on ignition and press "D" button. Rotate the actuator by hand until the center of "D" detent is felt then tighten and lock mounting nuts. Connect tan lead to parking relay. Check operation of actuator by pressing the various buttons at random, paying particular attention to any signs of laboring or hunting. Check angular adjustment of actuator by starting engine and operating at a fast idle. With the brake on press the various buttons and feel for correct shift. Shift "L", "H", "D", "H", "L". A distinct shift should be felt when actuator is correctly located with respect to detent.

Transmission Shift Relay Test Specifications
(Auto-Lite No. RAD-4004)

Contacts Close – 3.0-6.0 volts. Seals at 8.0 volts (max.).
Contacts Open – 1.0 volts (min.).
Resistor – .5-.6 ohms. (resistance of windings).

Pressure Switch Test Specifications
(Auto-Lite No. 14176A)

Contacts Open – 10 lbs. ± 2 lbs. per sq. in.