PACKARD

Service Parts List

726-733-740-745

826-833-840-845

901-902-903-904

packardinfo.com

Issued July, 1931

PRINTED IN U. S. A.

TO PACKARD DISTRIBUTERS

In compiling this parts list we have endeavored to arrange in the most convenient manner, necessary data for ordering repair parts.

The text is indexed both alphabetically and numerically, with illustrations distributed so that each cut is in close relation to its text. Wiring diagrams are incorporated, which not only show the method of wiring these cars but also list the piece numbers of all units used in the electrical system.

Repair parts for accessory units, which are serviced directly by the manufacturer, are listed and illustrated under the manufacturer's own piece numbers.

SERIAL NUMBER LOCATION

Front axle—front side of axle.
Motor—upper face of left front motor arm.
Steering—upper face of steering gear housing.
Frame—upper face of left hand side member just forward of dash.
Carburetor—right hand flange.
Clutch and transmission—right rear end of case.
Rear axle—lower side of differential carrier.
Vehicle number—stamped on the patent plate, fastened to left front face of dash.

MOTOR AND VEHICLE NUMBER

726-733, 277,015 to 320,000
740-745, 179,015 to 188,000
826-833, 320,001 to 340,000
840-845, 188,001 to 193,000
901-902, 340,001 up
903-904, 193,001 up

packardinfo.com

Ordering Parts

Use only standard Distributer's Sundry and Part Order forms No. D19.

Correct "charge to" and "ship to" names and addresses should be shown on every order.

Give piece number, name and quantity required.

Always advise motor or vehicle number.

State definite shipping instructions, i. e., parcel post, express or freight, etc.

Give explicit instructions how cases are to be marked.

Detail ordering instructions as outlined in Technical and Trade Letters should be adhered to in all cases.

In ordering utility parts please specify finish desired, otherwise we will ship standard parts.

Many special notes appear after the part names showing some of the parts listed herein being used or not used on certain models or body types and these notes should be watched very carefully when ordering from this book.

SERVICE DEPARTMENT
PACKARD MOTOR CAR COMPANY
DETROIT, MICHIGAN, U. S. A.

BODY TYPES

726	733	740	745	Pass.	Description
	400	410	420	7	Touring
	401	411	421	4	Phaeton
	402	412	422	2–4	Roadster
	431	441	451	4	Sport Phaeton
403		413	423	5	Sedan
	404	414	424	7	Sedan
	405	415	425	7	Sedan-Limo.
	406	416	426	5	Club Sedan
	407	417	427	5	Coupe
	408	418	428	2–4	Coupe
	409	419	429	2–4	Coupe—(Conv.)

826	833	840	845	Pass.	Description
	460	470		7	Touring
	461	471		4	Phaeton
	462	472		2–4	Roadster
	481	491		4	Sport Phaeton
463		473		5	Sedan
	483	493		5	Sedan—(Conv.)
	464		474	7	Sedan
	465		475	7	Sedan-Limo.
	466	476		5	Club Sedan
	467	477		5	Coupe
	468	478		2–4	Coupe
	469	479		2–4	Coupe—(Conv.)

901	902	903	904	Pass.	Description
	500	510		7	Touring
	501	511		4	Phaeton
	521	531		4	Sport Phaeton
503	543	513		5	Sedan
	523	533		5	Sedan—(Conv.)
	504		514	7	Sedan
	505		515	7	Sedan-Limo.
	506	516		5	Club Sedan
	507	517		5	Coupe
	527	537		5	Victoria
	508	518		2–4	Coupe
	509	519		2–4	Coupe-Roadster

packardinfo.com

Printed in U. S. A.

General Part Name Index

A

Accelerator Pedal - See Motor Accelerator Pedal..... 68
Ammeter.....25-30
Arm Rest.....179-202-221
Arm Sling.....180-202-222
Ash Receiver - Cowl Rail Finishing Moulding..... 235
Ash Receiver - Front Pillar.....195-214
Auto Jack - See Tool Box Auto Jack..... 133

B

Backing Light Switch Assembly..... 25
Battery.....1-25-30
Battery Parts..... 1
Body Attaching Parts - Open Body....149-161-171
Body Attaching Parts - Enclosed Body179-202-221
Body to Frame Bolts - Open Body.....149-161-171
Body to Frame Bolts - Enclosed Body.179-202-221
Body to Frame Liners - Open Body....149-161-171
Body to Frame Liners - Enclosed Body179-202-221
Body Wiring Cables - Open Body.....149-161-171
Body Wiring Cables - Enclosed Body..180-203-222
Body Wiring Cable Terminals - Open Body.....149-161-171
Body Wiring Cable Terminals - Enclosed Body.....180-203-222
Body Wiring Cable Terminal Insulators - Open Body.....149-161-171
Body Wiring Cable Terminal Insulators - Enclosed Body.....180-203-222
Bonnet..... 2
Bonnet Dash Liners - Open Body.....149-161-171
Bonnet Dash Liners - Enclosed Body..180-203-222
Bow Supports - See Top Bow Supports.157-167-176
Brake..... 5
Brake Shoes..... 13
Bumpers..... 14

C

Cables - Also See Wiring Assembly.....25-30
Cable Insulator.....25-30
Cable Terminals.....25-30-31
Camshaft - See Motor Camshaft..... 69
Carburetor - See Motor Carburetor..... 70
Carpets - Open Body.....149-161-171
Carpets - Enclosed Body.....180-203-222
Change Speed Lever - See Trans. Change Speed Lever..... 134
Cigar Lighter - See Inst. Board Cigar Lighter..... 22
Clutch..... 15
Connecting Rod - See Motor Connecting Rod. 75
Cowl - See Tonneau Cowl.....156-166-175
Crankcase - See Motor Crankcase..... 78
Curtain Fasteners - See Fasteners.....150-162-172-183-206-226
Curtain Rollers - See Window Curtain Roller.....196-216-238
Cushion - See Seat Cushion - Open Body.....155-166-174
Cushion - See Seat Cushion - Enclosed Body.....193-213-234

D

Dictograph.....181-203-222
Differential..... 18
Differential Driving Pinion Flange..... 20
Distributor - See Motor Distributor.....25-30
Distributor Bracket..... 24
Distributor Control Parts..... 24
Distributor Parts.....20-22-23
Distributor Drive Shaft..... 24
Dome Light.....181-203-223
Doors - Open Body.....150-162-171
Doors - Enclosed Body.....181-203-223
Door Parts - Open Body.....150-162-172
Door Parts - Enclosed Body.....182-204-224
Door Curtains - See Top Door Curtains.....157-167-176

E

Electrical Installation.....25-30
Electrical - Miscellaneous Parts..... 31
Envelope - See Top Envelope.....158-168-176
Exhaust and Intake..... 33
Exhaust Expansion Chamber..... 33
Exhaust Muffler..... 34
Exhaust Pipe..... 35

F

Fan - See Motor Fan..... 107
Fan Belt - See Motor Fan Belt..... 107
Fasteners.....150-162-172-183-206-226
Fenders - Front and Rear.....37-38
Fender Lamp.....25-30
Fender Lamp Parts..... 36
Floor Boards - Open Bodies.....151-163-173
Floor Boards - Enclosed Bodies.....184-206-227
Floor Mats.....187-209
Folding Seat - Open Body.....151-163-173
Folding Seat - Enclosed Body....184-185-207-227
Foot Rest - Open Body.....152-164-173
Foot Rest - Enclosed Body.....186-207-228
Frame..... 44
Frame Rear End Splasher..... 45
Front Axle..... 47
Front Axle Spring..... 49
Front Pillar Ash Receiver.....195-214
Front Seat.....152-164-173-186-207-228
Fuse Block Assembly.....25-30
Fuse - See Wiring Fuse..... 32

G

Gasoline Filter..... 53
Gasoline Gauge - See Inst. Board Gasoline Gauge..... 61
Gasoline Tank..... 53
Gasoline Vacuum Tank..... 54
Generator.....25-30
Golf Compartment.....154-164-187-208-229
Grip Handle.....187-208-229

H

Hand Brake Lever - See Brake Lever..... 9
Hassock.....187-208-229
Headlight.....25-30-55
Headlight Parts..... 55
Horn.....25-30
Horn Bracket - See Motor Horn Bracket..... 80
Horn Button.....25-30
Horn Button Parts..... 126

I

Ignition Coil and Switch.....25-30
Ignition Coil and Switch Parts..... 58
Ignition High Tension Cable.....25-30
Ignition Switch - See Instrument Board
Ignition Coil and Switch.....25-30
Ignition Switch Parts..... 58
Intake Manifold..... 36
Instrument Board - Open.....154-164-174
Instrument Board - Enclosed.....187-208-229
Instrument Board Ammeter.....25-30-59
Instrument Board Carburetor Air Valve
Control..... 59
Instrument Board Cigar Lighter.....25-30-59
Instrument Board Clock..... 59
Instrument Board Distributor Connecting
Rod..... 61
Instrument Board Gasoline Gauge..... 61
Instrument Board Ignition Coil and Switch
Assembly.....25-30-61
Instrument Board Light - Also See Inst.
Board Reading Light..... 63
Instrument Board Motor Thermometer..... 63
Instrument Board Oil Gauge..... 63
Instrument Board Light to Switch Cable.25-30-63
Instrument Board Light Switch.....25-30-63
Instrument Board Plate Assembly..... 63
Instrument Board Reading Light.....25-30-63
Instrument Board Reading Light Switch..... 30
Instrument Board Shock Absorber Control
Operating Rod..... 63
Instrument Board Switch.....25-30
Instrument Board Switch Parts - See
Ignition Coil and Switch.....25-30-61

L

License Plate Support - See Bumper
License Plate Support..... 15
Lighting Switch - See Steering Gear
Lighting Switch.....25-30-126
Lubricator..... 64

M

Mats - See Floor Mats.....187-209
Motor Accelerator Control..... 68
Motor Accelerator Pedal..... 68
Motor Camshaft..... 69
Motor Carburetor..... 70
Motor Connecting Rod and Piston..... 75
Motor Crankcase..... 78
Motor Crankshaft..... 81
Motor Cylinder..... 86
Motor Fan..... 107
Motor Flywheel..... 88
Motor Fuel Pump..... 88
Motor Fuel Pump Parts..... 90
Motor Gear Cover..... 80
Motor Gear Housing Breather..... 80
Motor Generator.....25-30
Motor Generator Parts.....91-93
Motor Generator Attaching Parts..... 90
Motor Generator Sprocket..... 91
Motor Horn Bracket..... 80
Motor Oil Filter..... 95
Motor Oil Manifold..... 95
Motor Oil Pan..... 80
Motor Oil Pan Oil Gauge Dial..... 80
Motor Oil Pressure Gauge Tube..... 97
Motor Oil Pump..... 95
Motor Piston..... 76
Motor Piston Lubricator..... 97
Motor Spark Plug.....25-30-88
Motor Starting Crank..... 99
Motor Starter Motor.....25-30
Motor Starter Motor Parts.....99-102
Motor Starter Switch.....25-30
Motor Support..... 80
Motor Support Brackets..... 80
Motor Thermometer - See Instrument Board
Motor Thermometer..... 63
Motor Vacuum Pump..... 105
Motor Valve..... 88
Motor Valve Cover..... 88
Motor Vibration Damper..... 106
Motor Water Pump..... 106
Mouldings.....188-209-229
Mouldings - Running Board..... 43
Muffler - See Exhaust..... 34

O

Oil Gauge - See Instrument Board Oil Gauge 63
Oil Gauge Dial - See Motor Oil Pan Oil
Gauge Dial..... 80
Oil Manifold - See Motor Oil Manifold..... 95
Oil Pan - See Motor Oil Pan..... 80
Oil Pump - See Motor Oil Pump..... 95

P

Panels - Open Bodies.....154-164-174
Panels - Enclosed Bodies.....190-210-232
Pillar - Removable..... 211

Q

Quarter Light - See Rear Quarter
Light.....190-211-233

R

Radiator..... 107
Rear Axle..... 112
Rear Axle Spring..... 115
Rear Compartment.....190-211-232
Rear Cowl - See Tonneau Cowl.....156-166-175
Rear Deck Rubber Mat.....154-164
Rear Fenders..... 38
Rear Floor Rubber Mat - See Floor Mats..187-209
Rear Quarter Light.....190-211-233

Rear-View Mirror - Open Body.....154-164-174
Rear-View Mirror - Enclosed Body....191-212-233
Robe Rail - Open Body.....155-164-174
Robe Rail - Enclosed Body.....191-212-233
Running Boards..... 40
Running Board to Frame Splasher..... 41
Running Board Lamp.....25-30-119
Running Board Moulding..... 43
Rumble Seat Compartment.....155-165-191-212-233

S

Seat Back Compartment - Front.....152-164-186-207-228
Seat Cushions - Open Body.....155-166-174
Seat Cushions - Enclosed Body.....193-212-234
Shock Absorber.....120-121
Shock Absorber Control Operating Rod - See Inst. Board Shock Absorber Control Operating Rod..... 63
Shock Absorber Relief Valves..... 123
Smoking Case - Also See Arm Rest Smoking Case.....179-195-202-214-221-235
Snap Fasteners - See Fasteners.....150-162-172-183-200-226
Spark Plug - See Motor Spark Plug.....25-30-88
Speedometer..... 123
Spotlight - Open Body.....156-166-174
Steering Connecting Rod..... 124
Steering Cross Tube..... 47
Steering Gear..... 124
Steering Gear Lighting Switch Assembly25-30-126
Steering Gear Lighting Switch Parts..... 126
Steering Knuckle..... 49
Steering Pillar Tube..... 126
Steering Post Cap Silencer Plate..... 126
Steering Post Control Cover..... 126
Steering Post Horn Button..... 126
Steering Post Lighting Switch Control Shaft..... 127
Steering Post to Instrument Board Bracket. 127
Steering Post Throttle Control Gear..... 127
Steering Wheel..... 128
Steering Worm and Post..... 128
Stop Light Switch.....25-30-129
Stop Light..... 129

T

Tail Lamp.....25-30-129
Tail Lamp Parts..... 129
Tire Pump..... 130
Toe Board..... 132
Toggle Grip.....195-236
Tonneau Cowl.....156-166-175
Tonneau Light.....156-166-175-236
Tonneau Ventilator.....157-167-175
Tools..... 133
Tool Box..... 134
Tool Compartment.....157-167-176
Top.....157-167-176-195-214-236
Top Bow Supports.....157-167-176-214
Top Door Curtains.....157-167-176
Top Envelope.....158-168-176
Top Seat Curtains.....158-168-176
Transmission Case..... 137
Transmission Countershaft..... 137
Transmission Change Speed Lever..... 134
Transmission Direct Drive and Third Speed Gear Shifter Fork Shaft..... 138
Transmission Driving Shaft..... 138
Transmission Gear Shifter Fork..... 139
Transmission Second Speed and Reversing Gear Shifter Fork Shaft..... 139
Trimming Material - Open Body.....159-169-178
Trimming Material - Enclosed Body...199-219-242
Trunk and Trunk Rack.....139-237

U

Universal Joint..... 141

V

Vanity Case - Also See Arm Rest Vanity Case.....179-195-202-215
Ventilator - Open Body.....158-168-176
Ventilator - Enclosed Body.....196-215-237
Visor.....196-216-237

W

Wheels..... 143
Wheel Carrier (Rear)..... 145
Wheel Carrier (Side)..... 147
Wheel Puller Bolt..... 134
Wheel Puller Shell..... 134
Window Curtain Roller.....196-216-238
Window Glass.....198-217-238
Window Lifter and Regulator.....197-216-238
Windshield - Open Body.....158-168-177
Windshield - Enclosed Body.....198-218-240
Windshield Cleaner - Open Body.....159-168-177
Windshield Cleaner - Enclosed Body..198-218-240

packardinfo.com

Numerical Index

Piece No.	Page No.	Piece No.	Page No.	Piece No.	Page No.	Piece No.	Page No.
20075	80	29657	200	45754	220	71397	29
20075	112	29657	220	46527	5	71397	31
20075	126	29657	243	46527	42	71397	127
20075	137	29662	200	46527	149	74071	138
21662	97	29662	220	46527	161	76925	151
21662	110	29662	243	46527	180	76925	163
21964	5	29663	160	46527	203	76925	172
22103	133	29663	170	46704	134	76926	151
22104	133	29663	178	46706	133	76926	163
22274	5	29663	200	46707	133	76926	172
23731	52	29663	220	47669	133	77082	43
23731	115	29663	243	48202	31	77547	79
29254	149	29664	160	48202	149	77748	79
29254	161	29664	170	48202	161	78396	25
29254	171	29664	178	48202	180	78396	29
29254	180	29664	200	48202	203	78396	30
29254	203	29664	220	48202	222	78396	31
29254	222	29664	243	48835	129	78945	120
29334	160	29666	160	49094	151	79574	152
29334	200	29666	170	49543	151	79574	164
29334	220	29666	178	51331	197	79574	173
29595	159	29666	200	51331	216	79574	186
29595	169	29666	220	51331	238	79574	207
29595	199	29666	243	53127	31	79574	228
29595	219	29790	196	55125	130	96529	124
29595	242	29790	216	55505	133	96973	55
29612	242	29790	238	58267	4	96984	38
29618	159	29874	152	60789	132	96984	42
29618	169	29874	186	61041	4	96985	38
29618	178	31338	157	61304	32	96985	42
29618	199	33170	149	61577	134	97056	49
29618	219	33170	179	62065	1	97730	76
29619	219	33170	199	62065	2	97731	75
29625	178	33170	218	62065	4	97732	76
29625	200	33170	232	62065	38	97748	120
29625	220	33170	241	62065	39	97762	52
29625	243	33287	25	62065	40	97763	52
29627	160	33287	30	62065	42	97774	88
29627	170	33287	31	62065	43	97799	88
29627	178	33287	63	62065	46	97809	34
29627	201	33287	126	62065	63	97810	34
29627	220	33287	149	62065	68	97811	34
29627	243	33287	161	62065	69	97812	34
29637	200	33287	171	62065	78	97837	138
29637	220	33287	180	62065	79	97861	133
29637	243	33287	203	62065	108	97862	118
29638	200	33287	222	62065	111	97942	137
29638	220	33848	199	62065	128	97943	139
29638	243	33883	178	62065	132	97947	70
29640	160	33883	199	62065	134	97956	70
29640	170	35579	33	62065	152	97957	70
29640	178	36111	25	62065	157	100100	152
29640	200	36111	29	62065	167	100100	163
29640	220	36111	30	62065	185	100100	173
29640	243	36111	31	62065	208	100100	184
29641	160	36111	63	62065	228	100100	207
29651	169	36111	119	62065	236	100100	227
29651	178	36111	127	62455	115	101273	5
29651	199	36111	149	62580	112	101275	5
29651	219	36111	161	62759	170	101276	5
29651	242	36111	171	62759	178	101510	5
29652	160	36111	180	62759	201	101908	9
29652	170	36111	203	62759	220	101810	9
29652	178	36111	221	62759	243	102507	71
29652	200	36111	222	64383	52	102507	156
29652	220	38059	196	64383	115	102507	166
29652	243	39397	109	67618	107	102507	175
29657	160	39403	46	68601	86	102585	181
29657	170	43293	49	70962	97	102585	203
29657	178	45754	201	71030	133	102585	223

packardinfo.com

Piece No.	Page No.	Piece No.	Page No.	Piece No.	Page No.	Piece No.	Page No.
102590	36	110427	132	114055	57	116410	130
102590	57	110428	132	114055	155	116446	151
102590	63	110429	132	114055	165	116446	163
102590	119	110430	132	114055	193	116446	173
102590	130	110431	132	114055	213	116458	129
102590	155	110432	132	114055	234	116504	9
102590	156	110433	132	114141	54	116554	151
102590	165	110462	55	114198	124	116554	162
102590	166	110576	88	114211	47	116554	172
102590	175	110576	90	114211	49	116681	29
102590	190	110576	97	114211	128	116795	52
102590	191	110576	132	114215	126	116931	130
102590	211	110577	132	114286	9	116932	130
102590	212	110579	132	114316	49	116933	132
102590	232	111074	183	114316	128	116934	132
102590	233	111104	17	114335	8	116935	132
102590	236	111473	137	114335	9	116939	132
103840	159	111474	134	114388	144	116940	132
103840	169	111490	16	114495	68	116941	132
103840	178	111526	137	114525	186	116942	132
103840	199	111538	19	114525	207	116943	132
103840	219	111538	138	114525	228	116945	132
105024	200	111538	141	114542	97	116955	152
105024	219	111544	138	114673	86	116955	186
105025	159	111568	157	114684	95	116956	132
105025	169	111568	167	114775	70	117607	43
105025	178	111568	176	114775	71	117858	213
105025	200	111671	150	114775	75	117970	106
105025	219	111671	154	114775	121	117971	107
105025	242	111671	162	114775	122	117984	138
105029	154	111671	164	114782	75	118024	124
105029	164	111671	172	114883	91	118104	9
105029	174	111671	187	114886	97	118196	19
105029	187	111671	208	114955	49	118228	49
105029	195	111671	229	114955	107	118230	49
105029	208	111672	154	114955	121	118500	150
105029	214	111672	164	115023	178	118500	162
105029	229	111672	187	115023	200	118500	172
105410	206	111672	208	115023	220	118555	158
105412	206	111672	229	115023	243	118555	168
105413	206	111687	190	115026	200	118555	177
106214	190	111687	211	115026	219	118555	196
106214	211	111687	232	115026	242	118555	216
106755	151	111752	108	115056	127	118555	237
106755	163	111980	86	115244	51	118771	158
106755	173	112054	206	115268	151	118771	168
106755	206	112058	151	115268	163	118771	177
106964	160	112058	163	115268	172	118771	196
106964	170	112058	172	115274	91	118771	216
106964	178	112058	183	115276	91	118771	237
106964	200	112058	206	115288	91	118970	123
106964	220	113789	160	115291	91	119226	150
106964	243	113789	170	115478	42	119226	162
107389	17	113789	178	115771	133	119226	172
107654	155	113789	220	115773	133	119245	150
107654	165	113789	243	115774	134	119245	162
107654	190	113812	170	115781	134	119245	172
107654	191	113812	178	115798	151	119296	150
107654	211	113812	220	115798	163	119296	162
107654	212	113812	243	115798	172	119296	172
107654	232	113822	199	115798	184	119297	150
107654	233	113822	242	115798	206	119297	162
107889	80	113860	51	115798	227	119297	172
107889	112	113860	115	115799	151	119298	150
107889	126	113912	160	115799	163	119298	162
107889	137	113912	200	115799	172	119298	172
108204	132	113980	199	115799	183	119298	182
108123	159	113980	219	115799	206	119298	204
108123	170	113980	242	115799	227	119298	224
110035	150	113981	200	116272	49	120489	112
110310	196	113981	219	116272	107	120513	108
110310	216	113981	242	116272	121	120813	19
110415	130	113983	200	116313	124	120813	54
110425	132	113983	220	116315	124	120813	86
110426	132	113983	243	116316	124	120813	112

packardinfo.com

Piece No.	Page No.	Piece No.	Page No.	Piece No.	Page No.	Piece No.	Page No.
120909	109	126986	126	130760	70	132740	69
120997	79	127012	128	130799	54	132812	137
120999	80	127031	12	130855	185	132878	159
121084	97	127032	36	130869	152	132878	168
121283	196	127033	36	130869	163	132878	177
121500	133	127039	130	130869	173	132878	198
121501	133	127253	199	130869	185	132972	197
121540	126	127253	219	130869	186	132972	217
121671	4	127254	201	130869	207	132972	240
121710	45	127254	220	130869	228	133104	161
121711	87	127259	199	131046	126	133104	171
121791	124	127260	200	131046	149	133104	202
121794	95	127260	220	131046	161	133104	221
121854	55	127260	242	131046	171	133108	44
121867	139	127273	20	131046	179	133264	197
122146	152	127273	138	131046	202	133264	217
122146	164	127279	29	131046	221	133264	240
122146	173	127279	31	131630	70	133303	25
122146	186	127286	132	131809	149	133303	59
122146	207	127498	155	131809	161	133407	1
122146	228	127498	165	131809	171	133467	80
122213	190	127498	191	131809	179	133467	81
122213	211	127498	212	131809	202	133478	42
122213	232	127498	233	131809	221	134021	76
122611	228	127501	155	131881	69	134163	159
122830	42	127501	165	131886	70	134305	76
122908	3	127501	191	131887	70	134306	77
123094	183	127501	212	131888	70	134312	143
123507	159	127501	233	132011	115	134315	143
123507	170	127502	157	132011	119	134317	143
123507	200	127502	166	132012	51	134318	143
123507	220	127502	175	132012	52	134319	143
123507	243	127502	236	132012	115	134321	143
124354	138	127807	160	132012	119	134323	143
124616	20	127808	160	132063	64	134324	143
124617	20	127808	170	132103	51	134327	143
124618	20	127808	178	132108	51	134328	143
124631	112	127808	200	132108	52	134329	143
124635	112	127808	220	132109	52	134483	68
124715	112	127808	243	132121	128	135111	130
124779	123	128008	124	132122	128	135117	243
125011	132	128040	160	132131	126	135119	128
125433	49	128040	170	132142	49	135807	187
125485	87	128040	178	132142	128	135807	208
125809	88	128040	201	132143	126	135807	229
125821	107	128040	220	132144	126	135909	25
125863	86	128040	243	132148	128	135909	129
126145	47	128082	47	132162	126	135910	52
126148	47	128286	133	132163	47	135911	119
126149	47	128287	133	132167	127	135913	119
126151	49	128288	133	132173	95	135949	52
126255	49	128289	133	132177	88	135950	119
126429	49	128290	133	132178	88	136593	155
126433	49	128291	133	132179	88	136593	165
126436	49	128467	160	132268	3	136593	190
126495	49	128467	170	132294	3	136593	191
126506	12	128467	200	132402	86	136593	211
126578	30	128467	220	132408	59	136593	212
126578	63	128467	243	132449	32	136593	232
126587	8	128541	126	132449	68	136593	233
126625	30	128743	78	132472	68	136711	57
126626	30	128792	126	132482	67	136788	97
126677	1	128819	5	132526	49	136996	18
126769	2	128827	63	132585	36	137014	32
126770	2	128828	63	132671	158	137015	25
126770	81	129047	106	132671	168	137015	30
126772	2	129489	1	132671	196	137102	123
126774	2	129489	25	132671	216	137107	138
126775	2	129773	33	132685	78	137108	124
126777	2	129773	55	132706	15	137109	49
126803	19	129773	105	132735	69	137118	47
126806	2	129773	123	132736	69	137142	49
126828	8	130011	86	132737	69	137145	91
126831	2	130104	79	132738	69	137153	49
126985	128	130565	1	132739	69	137510	183

packardinfo.com

Piece No.	Page No.	Piece No.	Page No.	Piece No.	Page No.	Piece No.	Page No.
137510	206	138920	19	140075	14	142048	87
137537	158	139030	152	140076	29	142054	133
137537	168	139030	164	140076	31	142606	182
137537	176	139030	173	140079	20	142606	204
137537	196	139035	157	140079	138	142686	87
137537	215	139035	167	140080	1	142694	91
137537	237	139035	176	140083	10	142793	152
137638	182	139046	157	140110	126	142793	164
137651	25	139046	167	140173	127	142793	186
137651	59	139046	176	140173	128	142793	207
137659	195	139047	157	140237	182	142793	228
137659	214	139047	167	140237	205	142818	186
137960	6	139048	157	140252	55	142820	159
137964	8	139048	167	140392	8	142820	169
137972	10	139086	14	140421	20	142820	200
137974	10	139150	151	140422	20	142820	219
138083	25	139150	163	140431	19	142821	186
138083	30	139150	172	140431	112	142989	109
138086	137	139150	184	140433	112	142994	16
138089	10	139150	206	140530	189	142994	88
138089	16	139150	227	140900	159	143105	79
138089	18	139157	151	140900	170	143106	79
138092	16	139157	163	140900	178	143109	79
138093	12	139157	172	140900	200	143110	79
138118	88	139157	183	140935	159	143114	79
138119	18	139157	206	140935	170	143131	79
138120	18	139157	227	140935	178	143134	16
138121	18	139158	151	140935	200	143143	70
138128	18	139158	163	140935	243	143143	71
138129	18	139158	172	140935	220	143143	75
138147	19	139158	183	140939	195	143360	55
138152	19	139158	206	140941	196	143360	68
138153	19	139159	151	140942	179	143360	159
138154	20	139159	163	140942	196	143360	168
138155	20	139159	172	140942	215	143360	177
138163	112	139159	173	140942	222	143360	198
138231	15	139159	184	141305	159	143421	88
138261	158	139159	206	141305	168	143442	119
138261	168	139159	227	141305	177	143442	129
138261	177	139160	151	141305	240	143448	52
138261	196	139160	163	141344	112	143449	119
138261	216	139160	172	141345	19	143450	17
138261	237	139245	119	141345	112	143457	19
138524	112	139457	170	141358	19	143458	19
138546	9	139457	201	141409	86	143459	20
13855[illegible]	115	139457	220	141441	73	143460	20
13855[illegible]	19	139466	33	141459	19	143461	20
138594	18	139489	79	141460	19	143462	20
138595	18	139489	107	141461	19	143463	20
138600	112	139508	112	141462	19	143470	16
138602	112	139509	6	141485	14	143471	17
138624	112	139512	52	141532	35	143476	17
138629	112	139515	52	141533	35	143477	17
138634	19	139521	133	141535	36	143478	17
138672	112	139522	55	141645	181	143479	17
138693	112	139523	55	141645	203	143480	17
138694	6	139587	18	141645	223	143483	15
138705	10	139768	18	141649	174	143485	17
138706	10	139769	49	141649	208	143487	15
138707	10	139803	78	141649	209	143488	15
138708	10	139803	107	141649	229	143489	15
138753	10	139804	149	141702	126	143495	42
138754	10	139804	161	141902	19	143496	43
138886	20	139804	171	141903	19	143522	57
138890	10	139804	180	141960	10	143523	57
138891	10	139804	203	141987	78	143524	57
138896	10	139804	222	141987	87	143525	57
138897	10	139910	199	141994	16	143554	197
138898	10	139910	219	141998	16	143554	216
138908	19	139910	242	142000	18	143554	238
138910	80	139915	151	142005	18	143555	191
138911	130	140009	240	142008	16	143568	191
138913	57	140065	141	142010	18	143578	183
138913	130	140067	18	142012	16	143578	206
138917	6	140073	112	142020	88	143615	154

Piece No.	Page No.	Piece No.	Page No.	Piece No.	Page No.	Piece No.	Page No.
143615	164	145701	52	147282	5	148339	191
143615	187	145711	115	147283	5	148739	212
143615	208	145716	41	147287	5	148339	234
143615	229	145800	8	147289	88	148404	79
144168	2	145881	54	147294	88	148406	95
144170	1	145923	32	147295	88	148435	80
144202	2	145923	33	147298	52	148440	123
144217	112	146016	144	147381	68	148443	95
144220	88	146088	49	147381	141	148448	141
144229	1	146091	10	147392	97	148455	25
144514	91	146103	59	147393	97	148457	80
144564	147	146103	228	147397	97	148462	61
144567	14	146106	144	147406	123	148463	54
144576	147	146108	144	147406	130	148469	139
144731	17	146156	185	147406	234	148589	182
144738	139	146159	185	147463	76	148603	199
144762	16	146163	185	147476	80	148603	219
144763	15	146164	185	147479	80	148606	199
144765	15	146168	185	147649	181	148606	218
144767	140	146173	185	147649	203	148637	151
144770	140	146265	64	147649	222	148637	163
144770	141	146266	64	147869	16	148637	172
144782	141	146267	64	147869	88	148638	45
144783	140	146268	64	147892	147	148639	45
144785	31	146269	68	147910	197	148662	45
144789	141	146272	68	147949	186	148707	183
144799	140	146273	68	147949	207	148742	178
144800	140	146274	68	147963	152	148742	201
144800	141	146283	25	147963	164	148742	220
144802	141	146283	63	147963	173	148754	121
144858	3	146303	78	147963	186	148780	76
144875	139	146316	146	147963	207	148781	76
144891	18	146316	147	147963	228	148782	76
144911	64	146316	148	147986	183	148783	76
144911	68	146317	147	148004	97	148784	76
144926	32	146317	148	148007	15	148785	76
145184	195	146322	147	148010	15	148786	76
145184	214	146322	148	148017	17	148798	76
145255	55	146404	64	148019	16	148801	43
145258	15	146405	64	148021	17	148819	64
145264	54	146412	68	148022	17	148846	146
145278	53	146583	33	148024	17	148846	148
145300	127	146583	68	148025	17	148856	95
145305	97	146596	138	148026	17	148884	49
145324	43	146788	144	148029	54	148887	49
145383	158	146788	147	148073	14	148957	39
145383	168	146848	198	148074	14	148974	57
145383	177	146850	199	148075	14	148994	31
145383	196	146850	218	148076	10	156312	143
145383	216	146883	198	148079	10	156313	143
145383	237	146883	218	148081	13	156314	143
145384	158	146884	198	148085	14	156317	143
145384	168	146884	218	148097	10	156318	143
145384	177	146887	199	148098	10	156319	143
145384	196	146887	218	148195	181	156346	159
145384	216	146888	218	148196	181	156346	170
145384	237	146952	127	148197	181	156346	178
145404	186	146955	32	148198	181	156346	200
145407	186	146955	53	148199	181	156346	220
145407	207	146955	61	148228	197	156346	243
145532	189	146990	88	148304	157	156347	200
145559	200	147039	183	148304	167	156347	220
145559	219	147039	205	148304	176	156348	159
145606	186	147188	55	148304	207	156348	170
145607	186	147188	90	148321	152	156348	178
145620	193	147188	106	148321	164	156348	200
145621	194	147216	86	148321	186	156348	220
145661	126	147217	86	148321	207	156348	243
145662	126	147218	91	148338	155	156416	214
145663	126	147219	91	148338	165	156426	70
145668	10	147237	69	148338	191	156450	146
145697	51	147241	86	148338	212	156450	148
145698	51	147246	5	148338	233	156451	146
145699	51	147253	70	148339	155	156451	148
145700	52	147254	70	148339	165	156455	146

packardinfo.com

Piece No.	Page No.	Piece No.	Page No.	Piece No.	Page No.	Piece No.	Page No.
156455	148	156858	178	157625	212	158175	97
156461	17	156861	195	157625	233	158185	88
156472	25	156938	10	157633	219	158198	119
156473	25	156971	124	157675	61	158199	119
156478	24	156972	124	157688	177	158216	70
156494	76	156982	106	157691	71	158222	76
156540	195	156983	106	157691	97	158230	80
156540	214	157018	155	157692	33	158234	25
156541	200	157018	165	157693	126	158234	59
156541	219	157018	191	157696	32	158236	59
156541	242	157018	212	157711	68	158237	59
156542	191	157018	233	157718	2	158238	59
156546	215	157022	160	157724	79	158243	63
156581	236	157022	200	157746	32	158244	63
156584	195	157022	220	157763	112	158245	61
156584	215	157022	243	157767	112	158258	61
156596	199	157063	188	157804	67	158266	80
156596	219	157064	188	157926	53	158267	80
156598	186	157080	152	157927	53	158270	80
156598	207	157080	164	157928	53	158276	80
156609	97	157080	186	157929	53	158277	80
156616	127	157080	207	157945	6	158278	80
156625	25	157278	67	157946	13	158279	80
156625	29	157320	195	157947	13	158280	80
156625	31	157320	215	157948	12	158306	69
156626	25	157364	159	157951	9	158307	69
156626	29	157364	169	157952	9	158313	87
156626	31	157364	200	157953	13	158338	45
156648	76	157364	219	157956	10	158339	45
156656	25	157432	29	157959	9	158371	8
156660	147	157432	31	157961	8	158375	52
156681	160	157434	97	157963	8	158375	119
156681	170	157435	97	157965	13	158407	63
156681	178	157436	97	157968	8	158419	81
156681	200	157437	97	157982	49	158420	81
156681	220	157438	71	157983	120	158426	61
156681	243	157438	97	157985	115	158427	124
156689	159	157439	97	157986	115	158438	81
156689	169	157466	55	158002	120	158439	81
156689	178	157466	95	158003	120	158440	61
156689	199	157466	97	158013	120	158441	140
156689	219	157476	67	158021	120	158442	140
156689	242	157476	159	158023	137	158443	45
156690	159	157476	168	158026	18	158444	133
156690	169	157476	198	158029	12	158459	17
156690	199	157477	95	158029	16	158460	17
156690	219	157477	97	158033	33	158470	17
156691	159	157477	130	158042	76	158473	15
156691	169	157477	198	158050	70	158474	15
156691	199	157477	218	158057	120	158476	15
156691	219	157477	240	158059	120	158573	55
156691	242	157477	241	158072	80	158608	108
156692	159	157484	59	158078	80	158613	78
156692	169	157583	155	158099	12	158621	81
156692	178	157583	165	158099	16	158622	81
156692	200	157583	191	158123	70	158630	80
156692	220	157583	212	158125	80	158656	69
156692	242	157583	233	158126	80	158668	80
156693	159	157584	155	158127	137	158669	86
156693	199	157584	165	158130	12	158670	86
156696	159	157584	191	158132	10	158686	86
156696	199	157584	212	158137	69	158687	86
156696	219	157584	233	158140	69	158688	86
156696	242	157585	155	158145	124	158718	78
156699	160	157585	165	158146	124	158723	70
156699	170	157585	191	158147	124	158724	78
156706	197	157585	212	158151	127	158781	106
156857	159	157585	233	158154	69	158782	106
156857	169	157586	178	158156	69	158784	106
156857	178	157586	200	158157	69	158791	106
156857	200	157586	220	158159	69	158809	2
156857	220	157586	243	158163	133	158842	54
156857	242	157625	155	158164	133	158844	99
156858	159	157625	165	158166	133	158868	110
156858	169	157625	191	158167	133	158994	190

packardinfo.com

Piece No.	Page No.	Piece No.	Page No.	Piece No.	Page No.	Piece No.	Page No.
158994	211	162176	179	163236	67	163885	165
158994	232	162177	179	163248	35	163885	174
159060	172	162217	197	163267	35	163893	182
159060	227	162217	216	163276	97	164003	6
159085	149	162217	238	163286	25	164004	13
159085	161	162239	35	163286	30	164005	14
159085	171	162320	183	163374	17	164007	127
159100	182	162320	205	163380	169	164008	6
159101	182	162325	199	163380	220	164010	1
159146	183	162325	219	163385	190	164061	120
159147	183	162326	199	163418	6	164062	120
159187	159	162326	219	163419	6	164063	120
159187	178	162328	199	163420	25	164078	140
159187	199	162328	218	163423	5	164079	139
159187	219	162370	195	163424	6	164083	46
159187	242	162370	215	163425	6	164083	141
159231	110	162389	39	163427	6	164153	159
159243	109	162430	54	163429	6	164153	168
159244	109	162432	54	163434	13	164153	177
159245	110	162435	54	163435	6	164155	159
159405	195	162436	53	163436	13	164155	169
159407	195	162437	53	163453	14	164155	177
159408	195	162450	29	163454	14	164198	158
159423	195	162456	88	163455	6	164198	168
159689	110	162461	1	163456	13	164198	176
159696	87	162461	25	163461	6	164199	158
159698	87	162468	1	163463	13	164199	168
159712	87	162495	129	163464	13	164199	176
159714	133	162495	140	163465	13	164249	158
159756	57	162496	140	163466	14	164249	168
159757	57	162497	141	163468	13	164249	176
159857	110	162500	46	163469	6	164259	152
159858	110	162506	1	163477	49	164259	164
159859	110	162522	46	163480	49	164259	186
159864	126	162523	46	163484	32	164259	207
159866	128	162552	33	163484	119	164277	159
159878	129	162555	139	163609	145	164277	169
159879	129	162557	140	163611	129	164277	177
159950	160	162586	61	163613	46	164280	159
159950	170	162610	134	163613	141	164280	169
159950	178	162620	16	163619	2	164280	177
159950	201	162623	95	163620	3	164282	159
159950	220	162624	24	163621	3	164282	169
159951	200	162625	95	163632	144	164282	177
159984	159	162629	4	163639	140	164283	159
159984	169	162750	57	163743	152	164283	169
159984	178	162954	16	163743	164	164283	177
159984	200	162957	17	163743	173	164358	182
159984	220	162979	76	163745	152	164358	204
159984	242	162980	57	163745	164	164358	224
160126	196	163000	76	163745	173	164359	182
160126	216	163027	144	173765	158	164359	204
160324	196	163029	144	163765	168	164359	224
161778	243	163066	139	163765	176	154370	242
161787	159	163172	159	163766	154	164373	242
161787	169	163172	169	163766	164	164630	77
161787	178	163172	200	163766	187	164631	77
161787	200	163172	220	163766	208	164632	77
161787	219	163172	242	163766	229	164633	77
161787	242	163181	76	163767	154	164634	78
161792	151	163182	76	163767	164	164635	13
161792	162	163183	76	163767	187	164636	13
161792	183	163184	76	163767	208	164637	13
161792	206	163185	76	163767	229	164645	157
161792	226	163186	76	163798	195	164645	167
161793	150	163187	76	163798	214	164646	157
161793	162	163188	76	163811	4	164646	167
161793	183	163198	109	163855	145	164679	182
161793	206	163199	109	163859	145	164679	204
161794	151	163200	144	163860	146	164679	224
161794	162	163205	112	163879	76	164700	224
162059	120	163207	49	163880	77	164713	51
162080	57	163214	35	163881	77	164715	67
162085	57	163234	34	163882	77	164716	67
162087	67	163235	34	163885	154	164718	52

packardinfo.com

Piece No.	Page No.	Piece No.	Page No.	Piece No.	Page No.	Piece No.	Page No.
164719	52	166901	242	167945	227	169524	197
164720	145	167069	149	167968	106	169547	32
164722	147	167069	161	167970	59	169548	32
164724	147	167069	171	167971	129	169549	31
165014	150	167069	180	167977	35	169550	32
165014	162	167069	203	167978	35	169553	25
165014	172	167069	222	167979	35	169553	30
165015	150	167103	32	167984	105	169553	32
165015	162	167116	57	168020	150	169554	108
165015	172	167132	55	168020	162	169563	146
165021	150	167134	55	168020	172	169563	148
165021	162	167136	55	169001	53	169564	146
165021	172	167171	106	169026	97	169564	148
165541	150	167172	106	169041	54	169565	146
165541	162	167173	105	169042	53	169565	148
165541	172	167177	95	169042	67	169567	146
165542	150	167244	184	169043	53	169567	148
165542	162	167250	182	169045	87	169568	64
165542	172	167250	204	169046	69	169570	64
165759	150	167250	224	169047	97	169577	73
165759	162	167257	199	169050	59	169578	73
165759	172	167261	32	169051	59	169591	128
166322	146	167265	158	169052	59	169597	70
166322	148	167265	168	169053	61	169654	196
166324	144	167265	196	169102	163	169655	182
166328	144	167265	215	169102	173	169656	182
166329	144	167422	220	169102	207	169661	197
166330	32	167422	243	169102	227	169661	217
166400	31	167433	200	169154	33	169662	197
166404	25	167433	220	169155	141	169662	217
166404	29	167433	243	169156	75	169665	183
166404	30	167434	200	169157	75	169672	198
166404	149	167434	220	169167	128	169673	199
166404	161	167434	243	169171	14	169673	218
166404	171	167438	199	169181	12	169676	189
166404	180	167438	219	169182	12	169676	210
166404	203	167438	242	169182	16	169677	189
166404	222	167444	44	169185	80	169677	210
166405	180	167453	145	169192	14	169680	188
166405	203	167473	88	169194	6	169680	209
166405	222	167568	107	169195	6	169684	199
166406	149	167616	53	169196	25	169684	218
166406	161	167626	53	169196	61	169692	183
166406	171	167627	53	169197	10	169692	206
166406	180	167628	53	169198	6	169697	198
166406	203	167634	53	169199	6	169698	189
166406	222	167638	55	169249	200	169699	189
166426	189	167638	90	169249	219	169704	188
166426	210	167641	55	169250	34	169704	209
166426	231	167642	55	169250	35	169705	188
166451	199	167643	4	169251	35	169705	209
166451	219	167644	4	169252	34	169706	188
166462	149	167660	32	169283	184	169707	188
166462	161	167701	199	169284	182	169712	188
166462	179	167768	106	169310	52	169716	188
166462	202	167771	54	169311	14	169716	209
166529	199	167772	1	169321	16	169717	188
166550	200	167773	1	169322	6	169717	209
166550	220	167774	1	169323	6	169718	188
166550	243	167777	1	169325	63	169723	189
166698	76	167779	1	169355	198	169723	210
166818	57	167787	59	169355	217	169724	189
166822	57	167787	75	169356	198	169724	210
166824	57	167914	199	169356	217	169725	190
166832	14	167924	149	169357	198	169726	190
166865	33	167924	161	169357	217	169730	198
166870	10	167924	171	169358	198	169730	218
166872	31	167924	179	169358	217	169734	197
166886	67	167924	202	169359	197	169734	217
166896	108	167924	221	169359	217	169735	197
166897	134	167945	151	169360	197	169735	217
166901	159	167945	163	169360	217	169736	198
166901	169	167945	173	169365	197	169736	217
166901	199	167945	184	169366	197	169737	198
166901	219	167945	207	169503	197	169737	218

packardinfo.com

Piece No.	Page No.	Piece No.	Page No.	Piece No.	Page No.	Piece No.	Page No.
169738	198	170089	106	170270	1	170445	5
169738	218	170091	106	170271	95	170448	4
169746	197	170094	107	170272	49	170449	4
169746	216	170102	87	170274	49	170450	2
169747	196	170109	107	170277	49	170453	4
169747	216	170112	81	170278	49	170454	4
169759	197	170113	81	170279	49	170460	2
169763	182	170114	45	170280	112	170462	4
169765	182	170115	45	170281	112	170470	2
169765	204	170116	47	170283	112	170495	1
169766	182	170120	119	170286	112	170498	2
169766	204	170121	119	170287	112	170499	2
169767	182	170122	45	170289	112	170500	108
169767	204	170123	45	170290	112	170507	4
169768	182	170124	76	170291	112	170508	4
169768	204	170128	47	170296	197	170518	132
169769	182	170129	47	170296	216	170520	61
169769	204	170130	47	170297	197	170521	61
169770	182	170131	45	170297	216	170522	80
169770	204	170135	75	170298	154	170523	79
169771	182	170136	75	170298	190	170525	78
169771	205	170139	78	170299	190	170526	78
169772	182	170141	69	170299	211	170529	110
169772	205	170147	86	170300	190	170652	179
169778	152	170148	86	170300	211	170652	202
169778	163	170152	86	170301	190	170655	179
169778	173	170154	106	170301	211	170655	202
169778	184	170156	80	170302	190	170656	179
169779	152	170157	80	170302	211	170656	202
169779	163	170158	69	170309	196	170657	197
169779	173	170162	45	170309	215	170658	197
169779	184	170163	45	170310	169	170667	182
169788	151	170176	120	170310	178	170670	152
169788	163	170177	120	170310	242	170670	186
169788	173	170179	120	170317	190	170689	183
169788	184	170187	146	170317	211	170689	205
169932	151	170187	148	170318	190	170689	226
169932	184	170195	44	170318	211	170717	3
169951	183	170197	67	170319	190	170719	95
169951	206	170198	67	170320	190	170722	124
169952	183	170205	47	170320	211	170748	43
169952	206	170206	14	170321	190	170749	43
169956	151	170207	14	170321	211	170753	193
169956	184	170208	14	170335	183	170753	213
169956	206	170209	14	170335	205	170770	182
169957	151	170210	14	170335	226	170770	204
169957	184	170211	95	170336	183	170771	182
169963	190	170219	6	170336	205	170771	205
169995	198	170220	12	170336	226	170806	87
169995	218	170222	12	170340	194	170807	87
170001	126	170224	12	170341	152	170808	87
170003	129	170225	112	170341	163	170809	87
170004	63	170226	47	170341	184	170830	44
170006	126	170227	47	170341	207	170832	43
170007	124	170231	95	170372	183	170833	43
170008	124	170232	45	170390	49	170834	43
170009	128	170233	45	170398	99	170835	43
170018	128	170234	47	170400	61	170838	44
170021	69	170237	45	170401	61	170839	44
170028	78	170238	44	170401	68	170840	44
170041	53	170239	44	170407	4	170841	110
170042	53	170241	95	170409	4	170842	40
170049	53	170242	87	170411	5	170843	40
170058	87	170243	108	170412	110	170844	40
170062	87	170246	49	170416	110	170845	40
170064	88	170247	144	170425	107	170846	111
170066	88	170250	144	170428	108	170848	111
170068	88	170252	144	170430	109	170849	41
170069	88	170253	144	170431	109	170850	40
170072	87	170255	144	170432	109	170863	111
170074	107	170262	112	170433	109	170866	41
170081	80	170263	35	170439	111	170867	41
170082	97	170264	35	170442	111	170868	41
170087	108	170265	34	170443	4	170869	42
170088	88	170266	144	170444	5	170870	42

packardinfo.com

Piece No.	Page No.	Piece No.	Page No.	Piece No.	Page No.	Piece No.	Page No.
170871	42	171077	140	171734	189	172109	38
170878	111	171095	129	171735	189	172110	39
170879	57	171171	25	171737	189	172127	198
170880	37	171171	129	171738	189	172127	218
170882	37	171174	97	171748	194	172129	154
170884	37	171178	111	171749	194	172129	187
170891	37	171182	106	171751	5	172130	179
170892	37	171184	111	171755	5	172131	179
170901	111	171185	111	171756	128	172133	190
170902	111	171186	111	171760	59	172133	211
170905	111	171188	53	171761	59	172133	232
170906	110	171196	127	171764	59	172146	197
170907	111	171197	25	171766	59	172146	217
170913	57	171197	126	171768	15	172147	197
170925	107	171198	127	171769	61	172147	217
170926	107	171506	38	171770	61	172161	107
170928	107	171507	39	171771	61	172174	107
170929	107	171508	198	171772	61	172180	86
170930	107	171509	198	171778	127	172181	86
170940	37	171526	181	171779	127	172182	86
170941	37	171545	180	171780	61	172183	86
170942	111	171546	180	171781	61	172184	86
170942	202	171548	180	171792	109	172185	86
170945	57	171549	187	171793	109	172186	86
170956	195	171550	37	171811	124	172187	86
170958	193	171551	37	171812	124	172188	86
170958	213	171552	37	171813	47	172189	86
170966	196	171568	63	171814	110	172190	86
170966	216	171569	61	171815	14	172192	147
170966	238	171570	128	171829	193	172193	145
170975	179	171572	128	171836	193	172194	145
170976	179	171574	127	171837	193	172197	95
170978	180	171576	127	171839	193	172202	25
170979	180	171577	127	171840	194	172203	183
170980	187	171578	126	171842	194	172203	205
170990	181	171579	127	171843	194	172204	196
170991	197	171580	127	171859	194	172204	215
170992	197	171580	128	171861	198	172204	222
170993	197	171580	202	171861	217	172205	196
170994	183	171580	221	171863	222	172205	215
170995	190	171581	127	171899	180	172205	222
170996	187	171581	128	171899	202	172219	73
170997	181	171586	127	171899	222	172220	182
170997	191	171588	57	171900	87	172220	205
170997	203	171589	128	171901	87	172230	189
170998	181	171596	126	171902	87	172230	210
170998	203	171597	126	171903	87	172231	189
171004	183	171594	14	171943	14	172231	210
171004	206	171629	187	171944	14	172232	189
171005	183	171643	184	171947	14	172233	189
171005	206	171673	184	171948	14	172234	190
171006	183	171691	163	171950	34	172235	190
171006	206	171692	151	171952	86	172248	193
171007	183	171692	163	171960	86	172252	188
171007	206	171692	173	171961	87	172252	209
171009	186	171692	184	171974	144	172253	198
171009	152	171692	207	171977	41	172254	189
171011	198	171692	227	171978	41	172254	210
171011	218	171693	180	171979	41	172255	189
171011	238	171694	180	171983	42	172255	210
171020	189	171695	180	171984	42	172270	38
171020	210	171697	180	171985	42	172271	39
171021	189	171698	152	171989	144	172284	198
171021	210	171698	163	172019	187	172284	218
171022	189	171698	173	172054	141	172284	238
171022	210	171698	184	172055	144	172285	196
171023	189	171698	207	172056	144	172286	196
171023	210	171698	227	172076	145	172294	156
171026	183	171703	152	172094	144	172294	166
171047	180	171703	163	172103	195	172294	175
171061	57	171703	173	172103	215	172294	194
171066	25	171703	184	172107	195	172294	214
171066	55	171703	207	172107	215	172294	235
171069	25	171703	227	172108	195	172344	201
171069	55	171715	193	172108	215	172470	160

Piece No.	Page No.	Piece No.	Page No.	Piece No.	Page No.	Piece No.	Page No.
172470	170	173311	214	173471	199	173629	193
172470	178	173311	235	173471	218	173634	188
172470	201	173312	190	173472	189	173634	209
172470	220	173312	211	173474	189	173635	188
172470	243	173312	232	173475	189	173635	209
172663	199	173313	186	173478	188	173636	182
172695	180	173313	208	173479	188	173639	187
172696	180	173313	228	173482	188	173639	208
172754	180	173322	134	173483	188	173640	156
172965	133	173326	19	173485	179	173640	166
172978	2	173327	19	173486	161	173640	193
172985	55	173328	20	173486	202	173640	213
172987	55	173329	19	173487	149	173641	156
172990	75	173330	20	173487	161	173641	194
172993	147	173331	19	173487	179	173643	156
172997	86	173333	19	173487	202	173643	166
173011	198	173334	81	173488	149	173643	194
173012	198	173335	81	173488	161	173643	214
173016	154	173336	81	173488	179	173644	155
173016	186	173337	81	173488	202	173644	165
173032	189	173347	59	173490	180	173644	193
173032	210	173347	61	173490	202	173644	213
173033	189	173347	63	173490	222	173649	180
173033	210	173347	154	173499	197	173649	202
173035	189	173347	187	173499	217	173805	154
173035	210	173350	147	173503	158	173805	187
173036	189	173350	148	173503	168	173806	154
173036	210	173352	148	173513	186	173806	187
173129	155	173354	144	173513	208	173814	150
173129	165	173355	144	173513	228	173814	162
173129	191	173357	36	173514	196	173814	172
173129	212	173359	36	173514	216	173828	195
173130	155	173360	80	173514	238	173828	214
173130	165	173363	25	173515	179	173840	158
173130	191	173363	36	173515	202	173840	168
173130	212	173364	37	173518	194	173841	215
173138	155	173366	141	173519	194	173842	215
173138	165	173367	32	173520	194	173851	186
173138	191	173367	33	173525	182	173851	207
173138	212	173369	14	173525	204	173861	13
173148	186	173370	14	173526	182	173863	10
173148	208	173373	18	173526	204	173914	37
173148	228	173374	18	173529	180	173915	37
173150	186	173375	18	173532	199	173930	37
173150	208	173376	18	173532	219	173949	126
173150	228	173398	8	173533	199	173952	150
173172	144	173411	155	173533	219	173952	162
173173	144	173411	165	173534	199	173952	172
173176	55	173411	191	173534	218	173953	150
173178	97	173411	212	173535	196	173958	188
173179	97	173415	197	173535	216	173958	210
173181	146	173415	217	173537	197	173963	181
173181	148	173415	239	173537	217	173965	182
173182	146	173419	189	173538	182	173965	205
173182	148	173420	191	173538	204	173966	188
173187	144	173428	193	173539	182	173966	209
173190	29	173429	194	173539	204	173967	188
173191	29	173430	194	173540	18	173967	209
173192	29	173431	194	173541	17	173968	188
173237	194	173439	191	173542	107	173969	188
173237	213	173440	195	173543	106	173970	188
173237	235	173440	214	173544	106	173971	188
173238	193	173440	215	173545	107	173972	188
173238	213	173441	199	173546	147	173973	188
173243	199	173441	218	173547	147	173976	188
173243	219	173456	190	173550	147	173977	195
173243	242	173456	210	173551	147	173977	214
173259	154	173457	190	173552	107	173977	215
173298	193	173457	211	173557	145	173978	188
173299	194	173458	190	173596	36	173979	188
173300	194	173458	210	173600	214	173982	189
173305	194	173459	190	173603	215	173983	189
173306	194	173459	211	173610	184	173984	190
173307	194	173470	198	173624	180	173985	190
173311	194	173470	218	173628	179	173988	189

packardinfo.com

Piece No.	Page No.	Piece No.	Page No.	Piece No.	Page No.	Piece No.	Page No.
173988	210	174188	150	174723	208	175164	54
173989	189	174189	150	174724	154	175166	9
173989	210	174196	200	174724	164	175167	9
173994	189	174196	219	174725	154	175168	9
173995	189	174196	242	174725	164	175171	9
173996	189	174201	159	174726	154	175172	9
173998	196	174201	169	174726	164	175177	44
173998	216	174201	200	174727	154	175178	47
173999	196	174201	220	174727	164	175179	47
173999	216	174212	189	174735	156	175183	99
174056	37	174213	189	174736	156	175184	45
174064	126	174214	189	174743	200	175187	81
174065	45	174215	189	174743	220	175188	81
174066	45	174216	187	174743	243	175223	191
174071	29	174216	208	175043	118	175225	154
174072	29	174223	150	175044	119	175225	165
174076	29	174223	162	175045	118	175227	154
174076	31	174223	172	175046	119	175227	165
174093	8	174225	188	175056	115	175228	180
174095	25	174225	209	175058	115	175230	149
174095	36	174226	38	175060	115	175230	161
174096	8	174227	39	175062	115	175230	179
174098	8	174231	189	175064	115	175230	202
174108	43	174288	159	175066	115	175231	149
174109	44	174288	198	175068	118	175231	161
174113	150	174398	25	175070	118	175231	179
174113	162	174398	30	175072	115	175231	202
174113	172	174406	107	175074	115	175234	169
174114	150	174407	86	175078	118	175234	178
174114	162	174412	107	175080	118	175234	200
174114	172	174421	41	175084	189	175234	220
174115	150	174422	40	175084	210	175234	242
174115	162	174424	41	175085	189	175244	40
174115	172	174425	42	175085	210	175247	158
174116	150	174428	133	175086	189	175247	168
174116	162	174501	155	175086	210	175247	196
174116	172	174501	165	175087	189	175247	216
174127	183	174501	174	175087	210	175257	193
174130	197	174509	197	175110	180	175258	193
174131	197	174510	198	175110	203	175259	193
174138	188	174511	198	175113	181	175260	193
174138	209	174512	197	175113	203	175268	183
174139	188	174513	159	175114	156	175269	183
174139	209	174513	169	175126	152	175270	183
174140	198	174513	178	175126	186	175271	183
174140	217	174513	200	175128	152	175272	152
174141	197	174513	219	175128	186	175272	186
174142	197	174513	242	175129	152	175276	190
174145	188	174518	195	175129	186	175277	190
174145	210	174519	198	175131	152	175278	197
174146	182	174519	217	175131	186	175280	29
174146	205	174520	198	175132	152	175281	29
174147	182	174520	217	175132	186	175285	81
174147	205	174524	149	175133	154	175286	81
174148	205	174533	38	175133	186	175287	108
174149	205	174534	39	175134	154	175288	109
174150	191	174636	8	175134	186	175289	4
174151	186	174637	126	175143	154	175293	147
174151	207	174638	2	175143	165	175295	78
174152	158	174642	109	175144	155	175301	78
174155	150	174643	1	175144	165	175305	5
174155	162	174645	120	175144	193	175308	4
174156	150	174646	120	175144	212	175312	5
174156	162	174662	47	175144	234	175316	124
174157	150	174667	6	175145	155	175328	79
174157	162	174673	8	175145	165	175329	4
174158	150	174701	149	175145	193	175334	108
174158	162	174703	149	175145	212	175351	68
174164	150	174709	151	175148	144	175353	128
174165	150	174710	149	175152	37	175355	128
174166	150	174719	191	175153	37	175358	128
174167	150	174722	191	175157	41	175359	2
174168	38	174723	154	175158	42	175360	144
174169	38	174723	164	175159	54	175361	126
174180	154	174723	187	175161	54	175362	145

packardinfo.com

Piece No.	Page No.	Piece No.	Page No.	Piece No.	Page No.	Piece No.	Page No.
175363	145	175659	168	175984	156	176150	155
175364	127	175659	176	175985	156	176151	155
175365	145	175660	158	175986	156	176181	201
175379	147	175660	168	175987	156	176181	220
175380	147	175660	176	175989	154	176182	158
175384	154	175671	156	175989	164	176205	158
175384	187	175672	157	175992	193	176206	190
175406	39	175676	149	175993	193	176207	190
175407	38	175676	179	175994	189	176207	211
175408	39	175685	184	175995	180	176207	233
175409	38	175685	206	175996	180	176235	157
175410	39	175714	32	176036	193	176235	167
175411	38	175715	32	176037	156	176236	157
175412	39	175716	108	176045	156	176236	167
175413	38	175718	29	176047	194	176237	157
175414	39	175722	129	176048	194	176256	157
175415	38	175722	140	176049	194	176256	167
175416	39	175727	41	176051	194	176258	13
175417	38	175728	40	176052	156	176259	14
175418	39	175748	18	176069	149	176260	14
175419	38	175751	140	176082	196	176261	14
175420	39	175757	183	176095	198	176262	14
175421	38	175757	206	176096	198	176263	81
175423	189	175757	227	176097	158	176264	81
175423	210	175763	149	176097	167	176265	81
175424	189	175763	179	176098	158	176266	81
175426	182	175764	189	176099	158	176267	81
175426	204	175764	210	176099	167	176268	86
175427	182	175766	180	176100	157	176269	157
175427	204	175774	194	176100	176	176270	157
175428	182	175776	194	176102	157	176273	157
175428	204	175782	158	176102	176	176273	167
175438	189	175782	167	176103	157	176274	157
175439	189	175784	158	176103	176	176274	167
175441	124	175784	167	176104	157	176276	188
175442	123	175786	157	176104	167	176281	195
175442	124	175788	158	176104	176	176281	214
175444	145	175790	158	176105	157	176282	190
175445	145	175792	158	176105	176	176282	211
175446	75	175800	195	176106	157	176282	232
175447	74	175800	214	176106	176	176283	157
175449	75	175826	181	176107	157	176288	156
175460	69	175826	203	176107	167	176288	166
175469	75	175846	18	176108	157	176288	175
175470	69	175847	18	176108	167	176289	156
175479	133	175849	13	176124	150	176289	166
175484	33	175851	13	176124	172	176289	175
175485	33	175902	151	176125	150	176291	199
175501	120	175911	34	176125	172	176291	218
175502	45	175911	36	176126	150	176294	158
175503	45	175911	106	176126	162	176294	169
175536	44	175912	34	176127	150	176296	157
175537	47	175913	34	176127	162	176296	167
175538	47	175916	34	176129	158	176296	175
175578	149	175919	107	176129	168	176300	157
175578	179	175923	146	176130	158	176300	167
175580	151	175925	145	176130	168	176300	175
175582	156	175929	54	176131	158	176301	157
175589	189	175930	145	176133	157	176301	167
175590	190	175938	46	176133	167	176301	175
175591	189	175940	46	176133	176	176304	157
175596	190	175941	146	176134	157	176304	167
175597	189	175942	46	176134	167	176304	175
175598	189	175943	46	176135	157	176307	190
175609	189	175944	46	176135	167	176307	211
175609	210	175948	115	176136	157	176307	233
175651	195	175950	118	176136	167	176308	197
175651	215	175952	115	176141	158	176308	216
175652	195	175959	123	176141	168	176308	238
175652	215	175970	187	176142	158	176312	156
175653	195	175972	180	176143	158	176312	166
175653	215	175973	180	176143	168	176312	175
175654	195	175976	196	176144	158	176313	156
175654	215	175979	156	176145	158	176313	166
175659	158	175982	156	176146	158	176313	175

packardinfo.com

Piece No.	Page No.
176314	156
176314	166
176314	175
176315	156
176315	166
176315	175
176318	156
176318	166
176318	175
176498	176
176545	178
176578	159
176578	169
176578	178
176578	219
176578	242
176579	159
176579	169
176579	242
176585	86
176586	86
176587	86
176588	86
176589	86
176592	112
176593	49
176594	127
176595	129
176596	130
176597	130
176599	130
176600	130
176601	130
176602	130
176603	129
176604	129
176605	130
176606	95
176607	63
176608	63
176609	63
176637	195
176637	214
176638	156
176638	166
176638	175
176650	157
176650	167
176650	175
176657	156
176657	166
176657	175
176658	156
176658	166
176658	175
176659	156
176659	166
176659	175
176664	155
176664	193
176666	155
176666	193
176673	199
176673	218
176674	155
176674	165
176674	193
176674	212
176688	157
176688	167
176688	176
176692	158
176692	168
176710	51
176716	115
176717	46
176720	87
176722	51
176724	51
176726	118
176728	118
176730	118
176732	118
176734	118
176736	118
176738	118
176740	118
176742	118
176744	145
176745	145
176747	37
176748	37
176756	147
176757	147
176759	146
176760	39
176760	149
176760	179
176762	130
176767	132
176768	141
176769	141
176773	195
176773	215
176777	195
176777	215
176784	158
176784	177
176785	158
176785	169
176786	156
176786	166
176786	175
176787	197
176787	216
176788	162
176788	172
176795	157
176795	167
176796	157
176796	167
176797	157
176797	167
176798	157
176798	167
176806	200
176816	154
176816	165
176816	174
176816	191
176816	212
176817	221
176822	75
176824	70
176825	70
176826	70
176829	70
176831	53
176833	53
176842	120
176843	137
176844	137
176847	137
176848	137
176849	137
176850	137
176851	137
176852	138
176854	139
176855	137
176857	137
176858	138
176859	138
176860	139
176861	138
176863	138
176864	34
176864	139
176868	139
176870	139
176871	139
176872	139
176873	139
176874	139
176875	139
176876	139
176877	139
176878	139
176879	139
176880	138
176881	138
176883	139
176884	139
176885	17
176886	17
176887	139
176889	139
176890	17
176891	17
176892	17
176893	17
176894	18
176897	17
176898	141
176900	132
176901	2
176908	141
176909	141
176912	25
176917	18
176918	18
176925	124
176926	68
176927	37
176931	128
176942	57
176943	41
176944	41
176947	42
176948	42
176957	45
176958	134
176960	57
176961	57
176962	57
176963	57
176965	57
176968	57
176969	57
176970	57
176972	57
176974	57
176975	57
176976	57
176978	57
176979	57
176980	57
176981	57
176982	57
176983	141
176984	150
176985	150
176986	181
176987	181
176988	181
176989	181
177006	156
177006	166
177006	175
177015	150
177015	162
177016	150
177016	162
177021	172
177040	181
177041	181
177042	181
177043	181
177044	181
177045	181
177046	150
177047	150
177048	181
177049	181
177050	181
177051	181
177052	181
177053	181
177054	181
177055	181
177056	181
177057	181
177058	181
177059	150
177060	150
177061	182
177062	182
177063	182
177064	181
177065	181
177066	181
177067	182
177068	182
177069	150
177070	150
177071	182
177072	182
177073	182
177074	182
177075	182
177076	182
177077	182
177078	34
177162	160
177179	74
177180	74
177181	74
177182	74
177186	73
177191	74
177192	74
177193	73
177194	73
177195	73
177196	73
177197	74
177198	73
177199	73
177200	73
177201	73
177203	73
177204	70
177205	74
177206	74
177207	73
177208	75
177209	75
177210	71
177211	71
177212	74

packardinfo.com

Piece No.	Page No.
177213	74
177214	74
177215	74
177216	74
177217	74
177218	71
177220	73
177221	73
177222	74
177223	74
177224	74
177225	74
177226	71
177227	70
177228	70
177230	73
177231	71
177234	73
177235	71
177236	71
177237	71
177240	71
177241	74
177242	74
177243	74
177244	74
177245	74
177246	74
177247	71
177248	71
177249	71
177250	71
177251	74
177252	74
177253	71
177254	71
177255	71
177255	73
177256	73
177258	73
177259	73
177260	75
177261	75
177262	75
177263	75
177264	73
177265	73
177266	73
177267	73
177268	71
177269	71
177270	75
177273	71
177274	74
177277	71
177282	70
177283	70
177285	16
177286	12
177295	164
177295	209
177297	73
177298	138
177303	137
177307	138
177309	54
177310	54
177312	55
177314	63
177315	53
177326	134
177327	145
177328	146
177329	145
177332	130
177334	137
177608	151
177608	162
177608	183
177608	206
177609	151
177609	162
177609	183
177609	206
177609	226
177645	149
177661	195
177661	214
177669	110
177676	127
177677	69
177680	57
177682	17
177684	147
177684	148
177685	146
177685	148
177687	146
177687	148
177690	146
177690	148
177691	17
177692	138
177693	139
177694	139
177695	139
177696	138
177697	138
177697	139
177698	138
177699	138
177700	138
177701	139
177704	146
177704	148
177835	198
177840	198
177840	218
177840	240
177840	241
177844	214
177848	198
177848	218
177850	198
177850	218
177851	240
177851	241
177858	155
177858	165
177858	193
177867	137
177874	55
177877	146
177877	148
177922	146
177923	78
177924	132
177926	144
177927	144
177928	144
177929	144
177932	44
178009	25
178009	30
178009	126
178020	80
178021	105
178047	143
178048	143
178049	143
178050	143
178051	143
178052	143
178053	109
178054	109
178055	109
178098	159
178282	203
178291	210
178292	210
178300	211
178301	211
178302	211
178303	211
178431	106
178434	105
178435	105
178440	59
178440	61
178440	63
178440	154
178440	164
178440	187
178440	208
178442	127
178442	128
178451	126
178455	105
178459	63
178473	163
178473	206
178475	152
178475	185
178476	152
178476	185
178477	151
178477	184
178478	151
178478	184
178479	152
178479	185
178480	152
178480	185
178483	187
178484	187
178488	154
178489	154
178491	183
178491	205
178492	197
178493	197
178494	197
178495	197
178496	183
178497	187
178497	208
178498	197
178499	190
178500	181
178500	203
178501	191
178501	212
178503	159
178503	169
178504	158
178504	168
178504	177
178507	151
178507	184
178508	151
178508	184
178509	156
178509	194
178510	156
178510	194
178513	181
178513	203
178514	191
178517	206
178597	105
178614	73
178615	73
178616	73
178623	61
178642	10
178657	37
178658	36
178659	37
178660	37
178661	37
178662	37
178667	63
178673	105
178674	105
178675	199
178676	199
178676	218
178679	5
178680	5
178705	166
178705	175
178734	147
178735	148
178737	147
178742	111
178743	111
178744	111
178763	45
178766	109
178767	15
178768	120
178789	216
178790	216
178796	216
178797	217
178807	15
178808	15
178809	141
178815	5
178824	55
178826	111
178827	15
178828	15
178829	111
178830	111
178832	123
178833	133
178845	34
178846	36
178847	34
178848	36
178853	105
178862	218
178867	218
178872	209
178912	209
178913	209
178914	209
178915	209
178927	238
178928	238
178931	209
178932	209
178933	209
178949	196
178949	216
178949	238
178961	220
178961	243
178962	201

packardinfo.com

Piece No.	Page No.	Piece No.	Page No.	Piece No.	Page No.	Piece No.	Page No.
178962	220	179325	194	179599	180	179885	105
179024	105	179326	194	179599	203	179886	69
179026	105	179327	194	179602	155	179887	69
179037	109	179328	194	179602	193	179888	70
179060	5	179329	194	179604	155	179951	95
179061	6	179330	194	179604	193	179954	13
179077	196	179331	194	179606	197	179955	106
179077	216	179332	194	179606	216	179958	25
179077	237	179334	194	179607	156	179959	138
179081	196	179335	156	179611	156	179962	138
179081	216	179336	13	179612	156	179963	138
179081	237	179337	13	179613	155	179964	138
179082	196	179401	219	179616	156	179965	138
179082	216	179402	152	179617	155	179966	138
179082	237	179414	159	179619	197	179967	139
179123	155	179414	169	179619	217	179968	139
179123	165	179414	199	179619	239	179969	138
179123	193	179414	219	179620	152	179971	139
179123	213	179416	156	179620	185	179972	139
179123	234	179417	156	179622	180	179973	17
179136	49	179418	156	179623	185	179975	138
179138	49	179419	156	179624	185	179976	138
179138	51	179420	156	179625	185	179979	79
179140	51	179421	156	179626	180	179982	79
179151	52	179422	156	179628	180	179983	124
179152	52	179423	156	179629	185	179984	124
179153	13	179424	156	179631	194	179985	126
179157	115	179507	183	179632	194	179987	126
179158	13	179508	151	179633	193	179989	25
179161	10	179508	184	179635	193	179989	30
179167	13	179509	151	179670	200	179989	126
179168	16	179509	184	179674	193	179990	127
179169	86	179514	185	179675	193	179991	127
179181	10	179515	152	179676	193	179993	127
179185	9	179515	185	179677	194	179993	128
179193	10	179519	185	179678	194	179994	127
179194	6	179520	185	179679	194	179995	127
179195	6	179521	185	179680	182	179996	128
179197	6	179524	152	179680	204	180001	34
179198	6	179524	185	179680	224	180002	33
179199	13	179525	152	179708	218	180003	33
179200	5	179525	185	179708	241	180004	36
179201	6	179526	191	179717	164	180005	36
179203	123	179526	212	179717	173	180027	137
179208	137	179526	233	179717	208	180051	219
179212	140	179527	191	179717	228	180051	242
179213	140	179527	212	179721	206	180060	218
179214	8	179528	184	179722	206	180061	218
179215	9	179530	9	179723	206	180062	213
179229	35	179531	120	179724	206	180079	161
179230	35	179534	12	179759	193	180079	202
179236	77	179538	8	179760	194	180082	202
179247	52	179539	8	179761	194	180082	222
179276	5	179541	8	179762	194	180086	203
179277	5	179542	8	179817	143	180087	203
179278	73	179548	8	179826	17	180088	203
179279	71	179549	8	179832	137	180089	203
179280	159	179553	35	179835	137	180090	203
179280	168	179562	34	179837	16	180091	203
179281	185	179563	34	179838	16	180092	203
179282	185	179564	33	179843	17	180093	203
179283	185	179567	87	179845	120	180094	203
179287	47	179570	36	179846	120	180095	209
179294	109	179575	17	179847	120	180096	209
179295	109	179583	185	179851	32	180097	209
179296	108	179584	149	179851	105	180099	205
179310	120	179584	161	179859	112	180100	205
179311	120	179586	180	179860	112	180132	168
179312	106	179586	203	179864	77	180133	167
179315	36	179586	222	179866	77	180134	152
179316	107	179594	184	179868	77	180134	164
179320	37	179595	151	179870	77	180134	173
179324	156	179596	151	179872	77	180134	186
179324	194	179597	184	179874	77	180134	207
179325	156	179598	184	179876	77	180134	228

packardinfo.com

Piece No.	Page No.
180142	167
180143	167
180144	167
180150	217
180151	217
180152	217
180153	217
180153	240
180154	208
180155	205
180156	205
180157	212
180158	211
180159	203
180160	205
180196	195
180207	47
180209	52
180211	36
180212	51
180214	47
180216	112
180217	112
180221	69
180224	4
180225	4
180226	4
180227	4
180244	47
180246	51
180283	203
180283	211
180284	203
180293	217
180294	217
180295	217
180295	240
180299	167
180300	217
180301	164
180301	174
180301	209
180301	229
190305	217
180306	217
180307	164
180307	174
180307	208
180307	229
180326	167
180326	176
180327	217
180339	51
180340	115
180341	51
180344	1
180346	47
180347	49
180348	49
180356	52
180357	52
180358	119
180360	51
180362	51
180364	51
180366	49
180368	49
180368	51
180370	51
180372	118
180374	118
180376	118
180378	118
180380	118
180382	118
180384	118
180386	118
180388	118
180390	118
180392	118
180394	118
180396	118
180398	118
180400	109
180500	47
180501	47
180502	47
180503	47
180511	107
180512	107
180515	109
180517	111
180518	110
180520	110
180521	110
180523	110
180525	110
180526	110
180531	110
180533	110
180535	110
180536	110
180537	110
180538	110
180539	110
180540	110
180541	110
180542	110
180543	110
180545	110
180546	110
180547	110
180550	51
180550	52
180550	115
180550	119
180562	78
180563	78
180564	78
180565	78
180567	51
180568	45
180569	45
180570	45
180571	45
180572	45
180573	45
180574	45
180575	81
180576	81
180577	81
180578	81
180581	52
180584	45
180585	119
180590	144
180591	144
180592	144
180593	144
180596	37
180597	37
180600	137
180602	37
180603	37
180606	37
180607	37
180610	37
180611	37
180624	167
180625	167
180627	167
180630	163
180631	163
180632	163
180632	207
180633	163
180633	207
180634	205
180635	59
180635	61
180635	63
180635	164
180635	208
180636	203
180636	223
180637	203
180638	211
180638	233
180639	211
180640	208
180645	156
180645	166
180645	175
180645	236
180646	157
180646	166
180646	175
180646	236
180647	157
180647	166
180647	175
180647	236
180648	164
180653	212
180666	164
180666	174
180666	228
180674	217
180675	217
180676	217
180677	217
180680	163
180687	218
180688	218
180693	238
180703	162
180703	172
180704	162
180704	172
180712	207
180713	163
180716	163
180717	207
180718	217
180719	217
180720	39
180721	38
180722	39
180723	38
180724	39
180725	38
180726	39
180727	38
180728	39
180729	38
180730	39
180731	38
180732	39
180733	38
180734	39
180735	38
180750	18
180751	19
180753	133
180756	159
180758	52
180763	52
180764	51
180765	44
180766	44
180767	44
180768	44
180770	51
180770	52
180770	115
180770	119
180775	115
180779	51
180784	25
180784	63
180791	47
180792	47
180793	47
180794	47
180798	119
180799	119
180800	51
180800	52
180801	115
180801	119
180802	51
180802	52
180802	115
180802	119
180803	49
180809	53
180810	53
180826	110
180827	146
180828	95
180829	95
180842	164
180842	174
180842	208
180842	228
180844	174
180844	228
180845	174
180845	208
180845	228
180849	38
180850	39
180851	38
180852	39
180853	38
180854	39
180855	38
180856	39
180857	38
180858	39
180861	206
180884	205
180885	205
180899	111
180900	111
180909	95
180911	146
180912	52
180913	119
180914	146
180918	15
180920	40
180921	40
180922	40
180923	40
180924	145
180927	144
180928	144
180929	144
180934	144

packardinfo.com

Piece No.	Page No.	Piece No.	Page No.	Piece No.	Page No.	Piece No.	Page No.
180935	144	181120	210	181448	144	181806	42
180936	144	181121	210	181450	210	181808	43
180937	144	181122	210	181451	210	181809	43
180938	95	181123	210	181452	210	181810	43
180942	37	181124	210	181453	210	181811	43
180943	144	181125	210	181456	214	181812	43
180944	144	181126	210	181457	213	181828	144
180945	144	181127	210	181458	213	181835	145
180948	146	181128	210	181460	213	181836	145
180949	146	181129	210	181495	211	181841	145
180953	207	181167	217	181496	205	181850	41
180954	207	181170	218	181497	205	181851	41
180955	210	181207	41	181498	206	181854	42
180960	218	181208	40	181499	206	181855	42
180961	218	181209	41	181500	206	181859	5
180961	213	181210	40	181501	206	181868	5
180963	212	181219	129	181502	205	181871	127
181002	167	181220	25	181503	205	181873	146
181003	167	181220	30	181528	202	181874	5
181004	167	181220	119	181537	218	181875	5
181005	167	181221	119	181537	238	181884	194
181006	168	181223	43	181582	214	181885	194
181007	167	181224	43	181583	214	181886	194
181008	168	181225	43	181584	214	181910	194
181011	168	181226	43	181695	207	181911	202
181012	168	181227	43	181695	228	181915	213
181013	168	181228	43	181697	207	181927	163
181014	168	181229	43	181697	228	181927	206
181018	206	181230	43	181702	207	181930	202
181019	169	181231	43	181702	228	181965	213
181019	177	181232	43	181703	207	181965	235
181020	204	181233	43	181703	228	181966	213
181021	204	181234	43	181710	165	181966	234
181022	210	181235	43	181710	212	181968	218
181023	218	181236	44	181711	202	181982	210
181023	238	181237	44	181717	213	181983	210
181024	218	181238	44	181718	213	181984	210
181024	238	181239	44	181719	205	181985	210
181042	205	181240	44	181720	205	181989	207
181043	213	181241	44	181722	205	181989	228
181043	235	181242	44	181723	205	181995	202
181044	214	181243	44	181728	165	181998	202
181044	235	181303	213	181728	212	181999	202
181045	163	181312	209	181733	218	182010	127
181046	163	181313	209	181734	218	182029	25
181046	207	181314	209	181735	218	182029	30
181049	205	181315	209	181736	218	182032	8
181054	146	181316	213	181751	213	182034	8
181054	148	181320	213	181752	213	182045	8
181055	146	181355	43	181753	213	182103	108
181055	148	181356	43	181754	213	182108	68
181058	46	181357	43	181755	213	182109	68
181065	45	181358	43	181756	213	182110	31
181067	45	181362	132	181757	213	182111	2
181076	140	181364	133	181758	213	182112	2
181077	140	181369	128	181759	217	182123	67
181080	14	181386	1	181759	239	182125	87
181081	15	181398	16	181761	159	182129	35
181082	5	181401	16	181762	159	182130	62
181086	14	181402	12	181763	51	182135	53
181087	14	181403	133	181764	51	182141	53
181090	129	181404	144	181772	145	182143	145
181093	14	181405	144	181773	145	182144	53
181098	59	181406	144	181774	145	182146	87
181146	207	181407	10	181776	41	182147	25
181110	210	181422	9	181778	41	182147	30
181111	209	181425	44	181781	145	182147	61
181112	209	181426	9	181782	145	182157	164
181113	209	181427	2	181785	42	182158	210
181114	210	181430	41	181787	42	182159	164
181115	209	181432	42	181795	45	182159	210
181116	209	181434	41	181798	1	182186	213
181117	209	181436	42	181800	41	182187	213
181118	209	181438	144	181802	42	182188	213
181119	210	181439	144	181804	41	182189	213

packardinfo.com

Piece No.	Page No.	Piece No.	Page No.	Piece No.	Page No.	Piece No.	Page No.
182194	213	182439	161	183111	34	183519	161
182195	213	182439	171	183136	25	183519	202
182196	213	182439	202	183136	59	183520	161
182197	213	182439	221	183153	67	183520	202
182201	44	182448	64	183170	205	183528	161
182202	44	182449	64	183170	224	183528	174
182204	127	182450	64	183170	225	183528	208
182204	128	182454	81	183171	205	183528	225
182211	39	182455	81	183171	225	183576	159
182212	40	182456	81	183172	217	183577	159
182215	3	182457	81	183172	239	183578	159
182229	3	182459	25	183173	217	183579	158
182242	124	182459	63	183173	239	183735	166
182248	41	182479	146	183174	220	183738	213
182249	41	182479	148	183197	161	183741	220
182250	41	182480	2	183199	161	183741	243
182251	41	182495	13	183257	217	183744	3
182252	44	182498	218	183257	239	183745	3
182278	124	182499	218	183258	217	183746	4
182282	4	182627	178	183258	239	183747	3
182283	49	182627	219	183259	166	183748	4
182285	126	182627	242	183259	175	183749	3
182287	127	182628	219	183266	166	183750	182
182287	128	182628	242	183267	166	183751	35
182290	29	182629	219	183270	166	183752	35
182291	29	182687	178	183271	166	183754	31
182292	29	182687	220	183276	216	183757	97
182293	29	182687	243	183277	216	183758	106
182294	29	182894	169	183280	166	183761	106
182296	29	182894	178	183280	175	183768	106
182307	2	182894	219	183281	166	183769	106
182308	140	182894	242	183283	166	183770	106
182310	97	182959	219	183284	166	183771	86
182311	97	183000	68	183286	166	183773	25
182323	164	183001	68	183290	166	183773	30
182323	209	183002	68	183290	213	183774	106
182324	5	183007	15	183292	166	183775	106
182332	53	183011	17	183293	166	183776	97
182332	54	183012	17	183294	166	183778	97
182333	97	183013	109	183295	166	183779	80
182340	73	183015	68	183297	163	183793	25
182341	73	183016	68	183297	173	183793	88
182349	70	183039	137	183299	161	183795	107
182350	70	183040	137	183362	161	183850	239
182366	2	183041	137	183363	161	183851	239
182367	2	183044	134	183369	161	183866	166
182368	3	183053	34	183369	202	183876	239
182369	3	183054	45	183388	205	183877	239
182377	59	183055	45	183389	166	183880	240
182377	202	183056	45	183390	166	183881	240
182377	222	183058	34	183391	166	183882	240
182377	236	183059	34	183392	166	183925	107
182382	217	183061	34	183393	214	183927	106
182383	217	183064	74	183394	172	183928	106
182386	205	183065	34	183413	213	183951	38
182386	226	183066	35	183414	213	183956	107
182387	205	183067	25	183445	78	183957	107
182387	226	183067	129	183446	78	183959	107
182396	203	183068	129	183447	33	183960	106
182398	203	183070	35	183448	33	183961	106
182406	217	183071	34	183449	144	183962	38
182407	217	183072	119	183453	144	183963	115
182423	168	183073	12	183465	67	183964	106
182424	218	183073	16	183466	44	183967	47
182428	213	183075	34	183467	44	183970	115
182429	214	183076	54	183470	34	184024	163
182430	213	183077	34	183476	38	184024	173
182431	214	183078	35	183477	170	184024	207
182433	214	183082	205	183482	71	184028	239
182434	216	183100	34	183513	202	184029	239
182434	238	183101	34	183514	202	184034	239
182435	213	183102	34	183517	161	184035	239
182436	213	183103	34	183517	202	184036	240
182437	213	183105	35	183518	161	184048	240
182438	213	183107	35	183518	202	184049	240

Piece No.	Page No.	Piece No.	Page No.	Piece No.	Page No.	Piece No.	Page No.
184052	239	184584	88	184961	123	185101	204
184053	239	184585	107	184962	71	185102	162
184057	240	184586	107	184963	75	185103	162
184236	170	184592	128	184964	75	185104	204
184236	178	184593	25	184965	71	185105	204
184249	211	184593	126	184966	74	185106	204
184249	233	184594	126	184967	74	185107	204
184300	16	184595	134	184968	74	185108	204
184300	88	184596	107	184969	74	185109	204
184306	120	184597	20	184970	74	185110	143
184307	107	184598	19	184985	73	185122	38
184308	121	184599	67	184988	29	185123	39
184308	122	184600	67	184988	31	185141	218
184309	121	184609	67	184989	17	185141	240
184309	122	184610	64	184990	17	185142	162
184310	79	184610	67	184991	107	185142	172
184323	120	184611	67	184994	46	185143	162
184324	120	184659	204	184995	45	185143	172
184325	37	184659	224	184998	141	185160	143
184326	37	184698	208	185000	43	185161	143
184331	67	184699	208	185001	43	185165	123
184332	67	184707	52	185002	43	185166	123
184333	67	184708	119	185003	43	185167	123
184335	68	184709	110	185004	40	185168	123
184338	67	184710	110	185005	40	185169	123
184339	67	184711	110	185006	40	185170	123
184343	145	184712	111	185007	40	185171	123
184346	17	184713	106	185011	120	185172	123
184348	71	184714	106	185012	120	185173	120
184406	37	184715	106	185017	219	185174	121
184409	159	184717	67	185031	119	185174	123
184410	19	184718	106	185031	157	185175	121
184412	87	184720	90	185031	166	185175	123
184413	87	184721	90	185031	175	185176	121
184414	87	184722	106	185031	223	185176	123
184415	87	184725	90	185031	236	185177	121
184416	87	184726	90	185033	205	185177	123
184417	87	184734	36	185063	119	185178	121
184445	207	184736	33	185064	119	185178	123
184446	207	184740	36	185065	119	185179	121
184447	207	184741	33	185066	73	185179	123
184451	207	184742	75	185067	73	185180	121
184451	227	184743	75	185068	73	185180	123
184454	207	184744	36	185069	71	185181	121
184454	227	184748	67	185070	162	185181	123
184455	207	184749	36	185071	162	185182	121
184455	227	184750	36	185072	204	185183	121
184456	207	184753	208	185073	204	185184	121
184458	227	184753	229	185074	204	185185	121
184461	214	184754	208	185075	204	185185	123
184467	8	184754	229	185076	204	185186	121
184471	90	184757	164	185077	162	185186	123
184473	80	184758	164	185078	162	185187	121
184474	90	184761	164	185079	203	185188	121
184476	36	184761	174	185080	204	185188	123
184477	53	184762	164	185081	203	185189	121
184478	32	184762	174	185082	204	185189	123
184478	33	184805	75	185083	204	185190	121
184478	68	184807	75	185084	204	185192	121
184478	130	184810	52	185085	204	185236	205
184480	54	184810	119	185086	204	185236	225
184481	54	184811	67	185087	204	185256	214
184482	54	184813	71	185088	204	185270	171
184483	54	184815	71	185089	204	185270	221
184488	54	184818	88	185090	204	185271	171
184497	124	184819	90	185091	204	185271	221
184504	18	184828	74	185092	204	185272	171
184505	236	184834	54	185093	162	185272	221
184566	121	184835	32	185094	162	185273	171
184571	124	184835	68	185095	204	185273	221
184577	139	184837	108	185096	204	185274	171
184578	76	184838	108	185097	204	185274	221
184579	90	184950	219	185098	204	185276	216
184580	90	184959	87	185099	204	185276	238
184583	88	184960	87	185100	204	185277	216

packardinfo.com

Piece No.	Page No.	Piece No.	Page No.	Piece No.	Page No.	Piece No.	Page No.
185277	238	185438	32	185701	225	185862	132
185278	216	185439	123	185702	173	185873	225
185278	238	185440	123	185702	227	185876	226
185279	216	185441	123	185703	173	185877	226
185279	238	185467	219	185703	227	185878	226
185193	121	185467	242	185704	173	185879	226
185211	219	185488	220	185704	227	185850	239
185211	242	185488	243	185705	173	185851	239
185233	172	185512	159	185705	227	185857	239
185235	172	185549	230	185709	173	185858	239
185280	216	185550	230	185709	227	185859	236
185280	238	185552	231	185710	225	185860	236
185281	216	185553	224	185711	225	185861	223
185281	238	185554	224	185712	225	185878	229
185301	166	185555	224	185713	225	185879	231
185301	175	185556	224	185714	240	185888	223
185303	238	185557	224	185715	226	185893	174
185304	238	185558	224	185716	226	185893	177
185305	238	185559	224	185719	227	185893	229
185306	238	185560	224	185732	225	185893	237
185307	238	185561	224	185733	225	185896	228
185308	238	185562	224	185734	225	185897	237
185309	238	185563	231	185735	225	185898	223
185310	238	185564	231	185736	225	185899	226
185328	218	185565	224	185737	225	185900	226
185331	213	185566	224	185755	230	185911	231
185336	238	185567	224	185756	230	185912	231
185346	238	185568	224	185757	230	185916	241
185347	238	185569	218	185758	231	185918	235
185363	67	185570	238	185760	239	185919	234
185364	214	185576	238	185765	240	185924	241
185365	77	185577	238	185767	231	185925	241
185366	121	185578	238	185768	231	185926	232
185367	121	185579	231	185770	241	185927	232
185368	88	185580	231	185771	229	185928	231
185373	127	185582	238	185772	229	185934	241
185376	139	185585	226	185776	176	185935	241
185387	211	185586	226	185776	237	185936	241
185388	211	185587	238	185778	226	185938	177
185389	211	185588	238	185779	226	185938	237
185390	211	185589	239	185782	229	185947	240
185391	211	185590	239	185785	175	185948	232
185392	211	185592	239	185785	235	185949	232
185393	211	185593	239	185788	236	185950	232
185394	211	185594	239	185793	177	185951	232
185395	211	185595	238	185793	237	185956	232
185396	211	188596	229	185794	177	185957	232
185397	211	185597	230	185794	237	185958	232
185398	211	185600	224	185797	177	185959	232
185399	211	185601	224	185797	237	185960	232
185400	211	185602	224	185798	177	185961	232
185401	202	185610	174	185798	237	185962	232
185402	204	185610	232	185799	177	185963	232
185403	204	185613	222	185799	237	185972	231
185404	204	185614	222	185800	177	185973	232
185405	204	185616	223	185800	237	185998	230
185407	208	185622	236	185801	177	185999	230
185408	206	185646	226	185801	237	186000	169
185409	206	185647	226	185807	177	186001	169
185411	206	185650	225	185807	237	186002	169
185412	227	185661	231	185808	177	186003	169
185414	203	185662	231	185808	237	186004	169
185415	203	185663	232	185809	177	186005	169
185416	106	185664	232	185809	237	186006	169
185421	32	185669	230	185811	177	186007	169
185422	32	185670	230	185811	237	186008	169
185426	70	185671	230	185812	230	186009	169
185427	70	185672	230	185813	230	186010	168
185428	69	185674	232	185814	177	186011	168
185431	218	185675	232	185814	237	186012	168
185433	67	185690	174	185822	225	186013	168
185435	115	185690	232	185826	221	186014	169
185436	112	185697	225	185827	225	186015	169
185437	159	185698	236	185828	225	186016	169
185437	169	185700	225	185831	241	186017	169

packardinfo.com

Piece No.	Page No.	Piece No.	Page No.	Piece No.	Page No.	Piece No.	Page No.
186018	169	186855	15	187057	215	187357	232
186019	169	186856	127	187058	215	187358	232
186020	169	186871	156	187059	215	187359	232
186022	107	186871	166	187060	215	187391	237
186029	118	186872	30	187061	215	187393	237
186030	118	186872	88	187062	215	187394	237
186031	51	186873	88	187063	214	187408	173
186032	51	186874	63	187064	214	187409	173
186033	51	186875	63	187065	214	187410	173
186053	77	186876	30	187066	215	187410	228
186055	77	186876	59	187076	39	187411	173
186112	52	186877	61	187077	39	187411	228
186113	52	186879	59	187098	237	187414	228
186114	119	186888	45	187102	39	187415	228
186115	119	186892	45	187103	39	187416	174
186140	34	186893	45	187104	239	187416	229
186140	35	186912	37	187105	239	187417	173
186164	99	186913	37	187113	228	187417	227
186165	134	186944	17	187124	230	187421	173
186166	133	186945	17	187125	230	187421	228
186192	141	186953	107	187126	177	187444	243
186210	169	186954	52	187126	237	187450	235
186211	169	186963	41	187137	177	187451	235
186212	169	186981	1	187137	237	187452	235
186213	169	186981	134	187144	221	187453	235
186214	169	186982	1	187145	231	187454	235
186242	119	186982	134	187146	230	187473	235
186243	119	186986	1	187147	230	187482	234
186286	123	186989	15	187148	230	187495	174
186317	37	187000	241	187159	39	187495	229
186320	30	187001	232	187160	39	187497	173
186320	129	187007	230	187191	221	187498	173
186321	30	187010	241	187192	177	187498	227
186321	129	187011	241	187192	237	187505	224
186327	129	187012	230	187221	221	187506	224
186328	129	187013	230	187224	224	187522	175
186329	129	187016	231	187225	239	187522	235
186330	129	187017	230	187226	239	187527	227
186419	15	187020	216	187227	239	187544	221
186420	15	187021	217	187228	239	187549	230
186423	4	187022	216	187229	239	187550	230
186436	69	187023	216	187258	235	187551	231
186436	122	187024	216	187259	235	187552	231
186436	127	187025	214	187260	107	187554	30
186501	20	187026	214	187260	171	187554	59
186595	9	187027	214	187260	222	187562	231
186629	144	187028	214	187275	227	187563	231
186630	144	187029	214	187276	222	187564	231
186645	76	187030	214	187277	222	187577	235
186647	75	187031	214	187278	222	187580	39
186648	76	187032	214	187279	227	187581	39
186651	76	187033	214	187280	227	187582	39
186659	74	187034	214	187281	239	187583	40
186661	77	187035	214	187282	239	187589	39
186662	77	187036	214	187283	240	187590	39
186678	36	187037	214	187284	240	187592	241
186679	36	187038	215	187285	221	187593	236
186683	36	187039	215	187286	223	187594	222
186684	36	187040	215	187287	233	187595	222
186696	115	187041	215	187288	233	187596	222
186697	115	187042	215	187291	233	187598	235
186703	47	187043	215	187292	223	187599	236
186704	45	187044	215	187293	233	187609	222
186737	44	187045	215	187297	238	187610	222
186739	45	187046	215	187300	223	187612	222
186744	123	187047	215	187301	233	187627	171
186769	17	187048	215	187302	223	187627	221
186778	134	187049	214	187325	223	187631	173
186779	137	187050	214	187326	223	187631	227
186780	137	187051	214	187327	233	187632	173
186781	134	187052	214	187335	235	187632	227
186782	137	187053	214	187336	235	187633	173
186783	137	187054	214	187337	235	187633	227
186797	134	187055	215	187338	235	187634	173
186807	137	187056	215	187357	174	187634	227

packardpro.com

Piece No.	Page No.	Piece No.	Page No.	Piece No.	Page No.	Piece No.	Page No.
187635	241	187989	230	190300	40	190566	79
187642	38	187990	231	190300	41	190572	79
187643	39	187991	231	190301	40	190592	132
187644	38	187992	230	190305	1	190596	88
187645	39	187993	229	190305	134	190606	59
187647	226	190000	61	190311	43	190607	70
187648	226	190001	61	190312	43	190608	70
187653	231	190021	77	190313	43	190616	59
187654	231	190030	63	190314	43	190617	133
187655	231	190039	63	190317	41	190624	88
187656	231	190042	63	190318	41	190627	134
187657	231	190045	61	190319	41	190628	134
187658	231	190046	61	190320	41	190650	59
187659	231	190047	59	190332	130	190655	137
187660	231	190047	61	190341	45	190673	127
187668	224	190047	63	190342	45	190674	174
187674	240	190048	59	190345	45	190674	229
187675	240	190048	133	190346	45	190676	88
198781	240	190049	63	190349	45	190680	54
187685	225	190050	63	190359	37	190681	133
187689	240	190052	61	190360	37	190682	127
187729	233	190053	61	190383	68	190682	198
187730	233	190076	59	190391	61	190684	81
187736	228	190084	59	190406	17	190686	127
187738	228	190088	63	190431	18	190687	127
187739	228	190091	130	190442	137	190690	34
187740	228	190092	129	190472	106	190692	30
187753	177	190093	44	190475	80	190692	36
187753	237	190094	44	190477	88	190693	109
187763	224	190097	146	190478	88	190694	109
187773	233	190110	30	190479	88	190704	1
187774	227	190110	63	190480	88	190705	17
187787	174	190111	145	190481	74	190706	1
187787	232	190119	2	190490	70	190706	134
187803	171	190120	2	190491	70	190710	1
187803	222	190121	2	190495	75	190710	134
187826	222	190122	2	190496	75	190712	5
187828	233	190124	2	190499	75	190715	63
187829	233	190128	35	190503	86	190716	1
187833	240	190129	133	190504	86	190716	134
187834	240	190134	53	190507	19	190718	35
187835	240	190135	53	190516	19	190719	1
187836	240	190145	35	190517	19	190719	134
187837	233	190148	1	190518	19	190720	1
187840	238	190171	34	190520	20	190720	134
187844	240	190174	53	190521	112	190721	134
187847	231	190175	53	190522	112	190722	129
187848	231	190191	16	190523	112	190723	30
187878	239	190192	59	190524	112	190723	129
187879	239	190192	61	190525	18	190729	35
187889	234	190192	70	190527	18	190735	1
187897	231	190192	71	190528	18	190736	134
187898	231	190192	121	190529	18	190738	30
187899	232	190192	122	190530	18	190738	36
187900	232	190192	127	190536	19	190739	5
187910	175	190192	177	190537	19	190751	134
187911	235	190192	237	190538	19	190756	134
187912	234	190193	130	190539	19	190757	6
187913	233	190196	1	190541	34	190758	5
187916	231	190224	133	190542	33	190759	6
187917	232	190231	133	190543	33	190760	5
187921	234	190233	53	190544	33	190773	134
187933	232	190246	42	190544	36	190774	47
187935	229	190246	46	190545	84	190775	47
187936	229	190291	6	190546	112	190776	47
187943	227	190291	8	190547	47	190777	47
187946	227	190291	9	190548	47	190778	47
187949	227	190291	12	190549	10	190779	47
187965	238	190291	71	190550	24	190780	47
187977	239	190294	40	190551	24	190781	47
187978	239	190295	40	190552	24	190783	1
187982	238	190296	40	190553	24	190787	51
187984	225	190297	40	190554	24	190789	44
187985	225	190298	41	190556	112	190790	44
187988	230	190299	40	190564	79	190795	80

packardinfo.com

Piece No.	Page No.	Piece No.	Page No.	Piece No.	Page No.	Piece No.	Page No.
190796	81	190963	133	191158	133	191437	14
190797	126	190964	109	191159	5	191438	14
190798	124	190965	4	191161	5	191439	14
190799	124	190966	109	191167	2	191466	109
190801	44	190967	109	191168	1	191470	109
190803	44	190968	109	191169	16	191474	147
190804	45	190972	4	191170	16	191475	2
190805	2	190973	4	191172	30	191476	2
190805	134	190984	137	191172	63	191477	5
190806	123	191005	79	191173	205	191483	147
190822	124	191006	6	191174	14	191487	147
190824	124	191007	6	191176	18	191488	147
190827	44	191014	13	191182	75	191490	122
190828	44	191015	13	191183	75	191521	30
190829	44	191022	8	191184	69	191526	88
190830	44	191028	8	191197	44	191529	74
190831	3	191029	8	191203	54	191530	74
190832	3	191030	8	191204	54	191535	74
190833	3	191035	10	191207	70	191538	74
190834	3	191038	10	191209	45	191539	86
190845	54	191039	12	191213	45	191540	87
190846	121	191043	9	191215	46	191541	87
190847	54	191044	9	191221	44	191542	87
190850	81	191045	9	191222	54	191543	87
190852	81	191046	9	191226	64	191544	87
190854	6	191047	12	191228	64	191549	79
190855	6	191047	16	191233	69	191551	18
190862	53	191048	12	191237	1	191552	18
190866	121	191048	16	191243	122	191553	18
190879	108	191050	9	191246	1	191554	19
190880	108	191052	9	191246	30	191555	19
190881	108	191053	9	191247	133	191604	41
190882	108	191056	9	191248	71	191606	42
109885	30	191058	12	191250	71	191608	41
190885	129	191061	6	191255	128	191610	42
190886	81	191062	6	191256	121	191616	55
190887	16	191063	6	191257	121	191619	4
190903	3	191064	6	191258	121	191624	41
190904	12	191065	107	191259	121	191626	42
190904	16	191066	107	191264	4	191628	41
190909	12	191068	74	191266	111	191630	42
190909	16	191069	74	191267	111	191632	46
190911	12	191070	24	191268	46	191634	45
190911	16	191071	30	191269	46	191635	46
190912	12	191073	24	191273	37	191636	46
190912	16	191090	17	191274	37	191638	111
190916	67	191103	12	191275	37	191641	18
190917	68	191103	16	191276	37	191642	18
190919	67	191104	3	191283	122	191643	140
190920	67	191105	4	191287	122	191644	140
190922	97	191108	4	191299	109	191646	133
190923	97	191109	4	191299	140	191649	95
190925	68	191112	75	191324	115	191652	147
190926	68	191113	75	191325	115	191653	147
190927	12	191118	132	191327	46	191654	107
190927	16	191120	132	191332	15	191656	5
190928	12	191121	132	191333	15	191656	79
190928	16	191124	38	191334	15	191658	46
190930	14	191125	41	191335	15	191663	97
190932	42	191127	42	191367	191	191664	141
190934	41	191129	41	191367	212	191673	12
190936	42	191131	42	191367	233	191674	12
190938	108	191133	133	191368	165	191692	12
190939	108	191134	133	191368	174	191693	128
190941	69	191135	37	191368	191	191695	45
190942	3	191136	37	191368	212	191697	13
190943	3	191139	71	191368	233	191700	67
190944	69	191142	71	191393	14	191704	67
190952	69	191144	3	191403	141	191706	109
190954	3	191149	67	191404	141	191707	109
190955	3	191150	67	191410	140	191708	13
190960	108	191151	4	191416	134	191715	78
190961	12	191153	70	191429	5	191716	78
190961	16	191155	70	191431	15	191717	78
190962	3	191157	5	191432	9	191718	78

packardinfo.com

Piece No.	Page No.	Piece No.	Page No.	Piece No.	Page No.	Piece No.	Page No.
191719	78	191820	77	192208	178	193185	231
191720	78	191821	77	192208	243	193199	172
191721	78	191822	77	192209	178	193199	227
191722	78	191823	77	192209	243	193200	172
191723	78	191824	77	192210	243	193200	227
191724	78	191825	77	192218	242	193201	172
191725	111	191825	78	192294	242	193201	227
191726	111	191829	122	192295	242	193209	241
191727	13	191832	121	192303	178	193218	236
191732	74	191833	121	192303	243	193221	234
191733	73	191834	121	192345	243	193228	234
191734	71	191835	121	192346	243	193229	226
191735	75	191843	78	193017	224	193230	226
191736	75	191845	78	193018	224	193231	226
191737	73	191846	78	193019	224	193232	226
191738	73	191847	14	193020	224	193233	226
191739	73	191848	30	193021	225	193234	226
191740	73	191849	108	193022	238	193235	226
191741	73	191850	108	193024	234	193249	236
191742	73	191858	35	193025	234	193263	222
191743	73	191859	35	193026	235	193264	222
191744	74	191863	34	193027	235	193265	222
191746	74	191868	35	193044	238	193269	241
191747	75	191869	34	193045	238	193271	234
191748	75	191888	111	193046	238	193278	234
191749	73	191894	1	193047	236	193280	235
191750	73	191895	134	193054	225	193281	235
191751	74	191903	3	193056	236	193292	235
191754	73	191904	3	193060	236	193293	235
191755	71	191905	108	193061	236	193294	235
191756	71	191906	108	193062	233	193295	235
191757	75	101907	108	193063	234	193296	235
191758	73	191909	108	193065	229	193297	235
191759	73	191910	111	193066	229	193298	235
191760	73	191911	67	193068	235	193299	235
191761	75	191912	67	193069	235	193301	241
191762	74	191914	108	193070	234	193310	229
191763	74	191917	4	193071	234	193312	231
191764	73	191922	14	193075	225	193313	231
191765	74	191924	90	193076	225	193314	231
191766	75	191926	3	193077	226	193315	231
191768	73	191927	3	193078	226	193317	231
191769	73	191928	54	193079	229	193342	177
191771	109	191929	54	193080	229	193352	243
191772	109	191935	90	193082	236	193357	227
191773	9	191937	4	193087	236	193358	236
191775	10	191938	14	193089	229	193359	236
191776	12	191939	4	193090	229	193360	226
191777	12	191950	54	193092	236	193374	235
191778	12	191951	54	193102	226	193375	234
191779	30	191952	35	193103	226	193379	241
191781	13	191955	35	193104	224	193380	240
191782	108	191956	35	193105	224	193381	240
191783	12	191960	35	193106	240	193382	240
191784	123	191961	79	193107	240	193388	241
191785	108	191962	90	193108	231	193389	241
191786	108	191971	79	193120	231	193390	241
191787	108	191972	79	193122	231	193391	241
191791	14	191985	147	193123	226	193400	174
191794	14	191986	147	193124	226	193401	174
191797	14	191988	121	193133	221	193402	174
191798	14	191990	122	193147	236	193403	174
191803	9	191991	122	193148	236	193406	241
191804	9	191992	122	193151	234	193407	241
191805	13	191994	122	193154	236	193410	174
191810	14	191995	122	193162	236	193412	235
191811	77	191996	122	193165	226	193418	236
191812	77	191999	122	193167	225	193419	234
191813	77	192035	242	193172	225	193421	234
191814	77	192037	242	193174	225	193436	236
191815	77	192038	242	193175	225	193437	236
191816	77	192043	242	193177	225	193438	236
191817	77	192088	178	193180	236	193443	235
191818	78	192088	242	193181	236	193450	176
191819	77	192090	243	193184	231	193455	235

packardinfo.com

Piece No.	Page No.	Piece No.	Page No.	Piece No.	Page No.	Piece No.	Page No.
193461	6	193922	39	194201	143	194375	76
193462	233	193923	39	194202	141	194376	76
193465	177	193930	171	194202	143	194377	76
193496	176	193930	221	194203	141	194378	76
193497	176	193931	171	194204	141	194379	76
193500	174	193931	221	194212	5	194380	76
193505	176	193960	173	194215	138	194381	76
193506	176	193961	173	194218	222	194382	76
193507	174	193979	236	194219	222	194383	76
193512	176	194001	64	194220	43	194384	76
193513	176	194004	55	194221	43	194385	76
193523	177	194007	64	194223	43	194391	77
193526	177	194008	64	194224	43	194400	77
193535	226	194011	148	194225	43	194401	77
193581	174	194012	147	194226	43	194402	77
193602	174	194019	147	194227	43	194403	77
193603	174	194021	147	194228	43	194404	77
193610	176	194024	147	194229	43	194405	77
193611	176	194029	4	194230	43	194406	78
193612	176	194030	4	194231	43	194407	77
193629	236	194033	130	194232	43	194408	77
193630	236	194034	69	194237	121	194409	77
193642	172	194036	121	194238	121	194410	77
193643	172	194037	121	194244	31	194411	77
193653	177	194045	122	194245	78	194412	77
193655	172	194046	122	194246	78	194413	78
193656	172	194050	121	194248	140	194430	52
193664	175	194053	122	194250	141	194431	52
193665	175	194054	122	194251	140	194432	119
193666	175	194060	122	194261	32	194433	119
193667	175	194061	122	194265	44	194434	119
193675	241	194071	14	194266	44	194435	119
193689	241	194074	81	194267	44	194436	119
193692	225	194075	81	194268	44	194437	119
193694	225	194076	80	194271	33	194438	107
193695	225	194077	80	194271	54	194439	107
193696	225	194087	145	194272	33	194440	123
193697	225	194088	145	194278	110	194441	59
193698	225	194091	145	194279	110	194442	61
193726	242	194092	145	194280	68	194443	59
193764	241	194093	147	194283	140	194444	130
193791	175	194094	147	194284	140	194445	130
193792	174	194098	30	194285	32	194446	130
193797	176	194098	55	194286	32	194447	130
193798	176	194099	30	194290	107	194448	130
193799	176	194099	55	194291	108	194449	130
193800	176	194100	31	194295	108	194450	130
193801	176	194101	31	194298	133	194451	130
193802	176	194108	31	194299	133	194452	130
193803	176	194109	31	194300	34	194453	130
193804	176	194110	31	194309	148	194454	130
193805	176	194111	31	194311	31	194459	18
193806	176	194142	46	194314	130	194460	141
193807	176	194143	46	194337	79	194461	141
193808	176	194147	88	194350	75	194462	141
193809	176	194148	88	194351	76	194463	141
193810	176	194155	32	194352	76	194509	109
193814	176	194162	46	194353	87	194510	109
193826	171	194163	46	194354	87	194511	109
193845	171	194167	46	194355	87	194512	109
193846	171	194168	46	194356	87	194525	63
193847	171	194182	19	194357	87	194526	63
193848	171	194183	112	194358	87	194537	64
193860	175	194184	18	194359	87	194538	2
193861	175	194185	112	194360	87	194539	130
193862	175	194186	31	194367	33	194541	2
193863	175	194189	141	194367	36	194545	143
193866	174	194190	143	194368	33	194546	143
193867	174	194191	143	194368	36	194547	69
193874	175	194193	143	194369	18	194548	15
193875	175	194194	143	194370	76	194549	15
193876	175	194195	141	194371	76	194551	15
193877	175	194196	143	194372	76	194552	15
193883	171	194197	143	194373	76	194554	15
193883	221	194198	31	194374	76	194560	57

packardinfo.com

Piece No.	Page No.	Piece No.	Page No.	Piece No.	Page No.	Piece No.	Page No.
194561	57	194720	46	194981	241	195475	223
194562	57	194732	64	194982	241	195476	223
194563	57	194732	122	194983	241	195477	223
194564	57	194738	70	194984	241	195478	224
194565	57	194739	70	194985	241	195479	224
194568	5	194740	18	194986	241	195480	224
194569	5	194741	18	194987	241	195481	224
194570	5	194742	18	194988	241	195482	171
194578	51	194745	16	195226	178	195483	171
194578	52	194746	17	195226	242	195484	171
194578	115	194751	69	195227	242	195485	171
194578	119	194752	69	195236	234	195486	171
194579	51	194755	17	195238	234	195487	172
194579	52	194761	4	195240	235	195488	172
194579	115	194774	42	195241	234	195489	172
194579	119	194777	6	195242	227	195490	221
194585	15	194778	6	195242	173	195491	221
194586	33	194780	133	195243	235	195712	237
194594	32	194784	143	195244	235	195717	238
194597	64	194785	143	195245	235	195718	237
194598	32	194786	143	195246	235	195719	237
194600	97	194794	143	195247	235	195750	224
194601	3	194795	141	195248	234	195751	224
194602	3	194811	51	195249	234	195752	224
194603	31	194818	36	195250	235	195753	224
194603	127	194826	78	195251	235	195754	224
194606	5	194827	99	195252	235	195755	224
194610	90	194842	123	195253	235	195758	237
194639	34	194843	123	195254	235	195760	229
194640	35	194859	241	195255	235	195761	230
194641	34	194860	241	195256	235	195762	229
194642	35	194861	241	195270	236	195763	230
194643	32	194864	241	195341	227	195764	230
194644	81	194865	241	195348	226	195765	230
194645	81	194866	241	195349	226	195766	230
194646	81	194867	241	195450	223	195767	230
194647	81	194868	241	195451	223	195768	229
194654	31	194869	241	195452	223	195769	229
194658	3	194870	241	195453	223	195770	229
194659	3	194871	240	195454	223	195771	230
194660	3	194872	240	195455	223	195776	226
194661	3	194873	240	195456	223	195777	226
194666	68	194874	240	195457	223	195778	226
194667	133	194875	240	195458	223	195779	226
194668	119	194876	240	195459	223	195780	226
194669	119	194877	240	195460	223	195781	226
194684	71	194878	241	195461	223	195782	226
194699	111	194879	241	195462	223	195783	226
194700	71	194920	178	195463	223	195784	226
194701	71	194921	178	195464	223	195785	226
194702	74	194922	178	195465	223	195786	226
194703	71	194923	178	195466	223	195787	226
194704	71	194924	178	195467	223	195788	239
194707	71	194925	178	195468	223	195789	239
194708	74	194926	177	195469	223	195790	239
194709	71	194927	177	195470	223	195791	239
194710	71	194928	177	195471	223	195797	237
194711	71	194929	177	195472	223	195804	224
194715	74	194930	178	195473	223	195805	224
194716	73	194939	241	195474	223	197401	242
194719	46	194980	241				

packardinfo.com

BATTERY

Piece No.	Name	No. Required 726 733	740 745	826 833	840 845	901 902	903 904
162461	Battery assembly--Willard No. 72705 type SJR R15 spec. No. 1205 (Bone Dry)	1	-	-	-	-	-
129489	Battery assembly--Willard No. 72800 type SJR R16 spec. No. 1205 (Bone Dry)	-	1	1	1	-	-
167777	Battery assembly--Prest-O-Lite type A-615 spec. No. 1205 (Bone Dry)	1	-	-	-	-	-
167779	Battery assembly--Prest-O-Lite type A-617 spec. No. 1205 (Bone Dry)	-	1	1	1	-	-
191246	Battery assembly--Prest-O-Lite type AH-6175-G spec. No. 1205 (Bone Dry)	-	-	-	-	1	1
144229	Battery anchor bolt	-	2	2	2	-	-
167772	Battery anchor bolt	2	-	-	-	-	-
5502	Lockwasher 1/4"	4	6	6	6	-	-
3868	Washer 1/4" plain	-	2	2	2	-	-
62065	Washer 17/64 x 3/4" plain	2	2	2	2	-	-
7004	Nut 1/4-28 plain	6	6	6	6	-	-
167774	Battery anchor bolt clamp	2	-	-	-	-	-
144170	Battery anchor bolt clamp	-	2	2	2	-	-
162506	Battery anchor bolt clamp guide	2	-	-	-	-	-
140080	Battery to frame junction cable assembly	1	1	1	1	-	-
191168	Battery to frame junction cable assembly	-	-	-	-	1	1
170270	Battery box assembly	1	-	-	-	-	-
181386	Battery box assembly	-	-	1	-	-	-
170495	Battery box assembly (used on 740)	-	1	-	-	-	-
174643	Battery box assembly (used on 745)(specify color)	-	1	-	-	-	-
181798	Battery box assembly	-	-	-	1	-	-
190783	Battery box assembly	-	-	-	-	1	1
186986	Battery box battery clamp assembly	-	-	-	-	2	2
7800	Screw 1/4-28 x 1" hex. hd.	-	-	-	-	2	2
7004	Nut 1/4-28	-	-	-	-	2	2
5502	Lockwasher 1/4"	-	-	-	-	2	2
190196	Battery box battery clamp anchor bolt	-	-	-	-	2	2
191237	Battery box battery clamp anchor bolt spacer	-	-	-	-	2	2
7004	Nut 1/4-28	-	-	-	-	6	6
5502	Lockwasher	-	-	-	-	4	4
62065	Washer 17/64 x 3/4"	-	-	-	-	4	4
162468	Battery box cover assembly	1	-	-	-	-	-
133407	Battery box cover assembly (used on 740)	-	1	-	-	-	-
180344	Battery box cover assembly	-	-	1	1	-	-
190735	Battery box cover assembly	-	-	-	-	1	1
164010	Battery box cover (used on 745)	-	1	-	-	-	-
130565	Battery box cover bolt	-	4	4	4	-	-
4690	Cotter pin 1/16 x 3/8"	-	4	4	4	-	-
3868	Washer 1/4" plain	-	4	4	4	-	-
126677	Battery box cover screw	-	4	4	4	-	-
167773	Battery box cover screw	2	-	2	-	-	-
190148	Battery box cover cushion	-	-	-	-	1	1
191894	Battery box cover finishing plate	-	-	-	-	1	1
7003	Battery box cover cushion retainer and finishing plate screw nut No. 10-32	-	-	-	-	14	14
5500	Lockwasher No. 10	-	-	-	-	14	14
194883	Battery box cover lock bolt	-	-	-	-	1	1
190704	Battery box cover lock bolt bracket	-	-	-	-	1	1
190719	Battery box cover lock bolt bracket screw	-	-	-	-	1	1
7004	Nut 1/4-28	-	-	-	-	1	1
5502	Lockwasher 1/4"	-	-	-	-	1	1
194884	Battery box cover lock bolt spacer	-	-	-	-	1	1
194885	Battery box cover lock bolt spacer screw	-	-	-	-	1	1
7003	Nut No. 10-32	-	-	-	-	1	1
5500	Lockwasher No. 10	-	-	-	-	1	1
190706	Battery box cover lock bolt spring	-	-	-	-	1	1
186982	Battery box cover lock cylinder assembly	-	-	-	-	1	1
186981	Battery box cover lock cylinder plate	-	-	-	-	1	1
190305	Battery box cover lock cylinder plate to cylinder screw No. 4-40 x 3/16" F. H.	-	-	-	-	1	1
5485	Battery box to fender bolt 1/4-28 x 5/8" carriage	2	-	-	-	-	-
169049	Battery box to fender bolt	-	-	-	-	3	3

Back

Piece No.	Name	No. Required 726 733	740 745	826 833	840 845	901 902	903 904
7827	Battery box to fender bolt 1/4-28 x 3/4" hex. hd. mach.	10	12	12	10	6	6
5770	Battery box to fender bolt 1/4-28 x 3/4" oval hd. (used on 745)	-	2	-	-	-	-
5241	Battery box to fender screw 1/4-28 x 3/4" O. H. mach. (side wheel carrier)	-	-	-	-	1	1
		-	-	-	-	1	1
195901	Battery box to fender screw (side wheel carrier)	-	-	-	-	1	1
195902	Battery box to fender screw nut (side wheel carrier)	12	12	12	10	6	6
5502	Lockwasher 1/4"	12	12	12	10	9	9
7004	Nut 1/4-28 plain	22	24	24	20	15	15
62065	Washer 17/64 x 3/4" plain	2	2	2	2	4	4
5753	Battery box to frame bolt 5/16-24 x 1-7/8" hex. hd.	2	2	2	2	-	-
7811	Battery box to frame bolt 5/16-24 x 1-3/8" hex. hd.	4	4	4	4	4	4
3909	Washer 5/16" plain	4	4	4	4	4	4
5504	Lockwasher 5/16"	2	4	2	4	4	4
7005	Nut 5/16-24	1	-	-	-	-	-
170498	Battery box liner	-	-	1	-	-	-
181427	Battery box liner	-	1	-	-	-	-
170499	Battery box liner (used on 740)	-	1	-	1	-	-
174638	Battery box liner (used on 745)	-	-	-	-	1	1
190805	Battery box liner (used on 745)	2	2	2	2	-	-
126772	Battery cable screw	-	-	-	-	2	2
7406	Battery cable nut 3/8-24 plain	-	-	-	-	1	1
5506	Lockwasher 3/8"	1	1	1	1	-	-
157718	Battery to ground cable assembly	-	-	-	-	1	1
191167	Battery to ground cable assembly	1	1	1	1	1	1
3877	Washer 3/8" plain	-	-	-	-	1	1
7406	Nut 3/8-24 plain	1	1	1	1	-	-
126775	Battery frame junction cable terminal stud (negative)	-	-	-	-	1	1
190124	Battery frame junction cable terminal stud (negative)	1	1	1	1	-	-
126777	Battery frame junction cable terminal stud (positive)	-	-	-	-	1	1
190121	Battery frame junction cable terminal stud (positive)	1	1	1	1	-	-
126769	Insulator--inner	-	-	-	-	1	1
190120	Insulator--inner	1	1	1	1	-	-
126774	Insulator--outer	-	-	-	-	1	1
190119	Insulator--outer	1	1	1	1	1	2
126770	Insulator--retaining washer	1	1	1	1	-	-
126806	Insulator--tube	-	-	-	-	1	1
190122	Insulator--tube	2	2	2	2	3	3
5506	Lockwasher 3/8"	3	3	3	3	3	3
7406	Nut 3/8-24 plain	2	-	-	-	-	-
158809	Battery support	-	2	2	2	-	-
144168	Battery support						

BONNET

Specify color of paint and striping on all orders for Bonnet Assemblies.

170450	Bonnet assembly	1	-	-	-	-	-
176901	Bonnet assembly (with doors)	1	-	-	-	-	-
191476	Bonnet assembly (with chromium doors)	-	-	-	-	1	-
182480	Bonnet assembly (with doors)	-	-	1	-	-	-
191475	Bonnet assembly (with chromium doors)	-	-	-	-	-	1
170460	Bonnet assembly (used on 740)	-	1	-	-	-	-
170470	Bonnet assembly (used on 745 custom)	-	1	-	-	-	-
194538	Bonnet assembly	-	-	-	-	1	-
182112	Bonnet assembly	-	-	1	-	-	-
194541	Bonnet assembly	-	-	-	-	-	1
182111	Bonnet assembly	-	-	-	1	-	-
175359	Bonnet assembly (used on 745)	-	1	-	-	-	-
172978	Bonnet clamp assembly	4	-	-	-	-	-
163619	Bonnet clamp assembly	-	4	-	-	-	-
182307	Bonnet clamp assembly	-	-	4	4	-	-
144202	Bonnet clamp bracket	4	-	-	-	-	-
126831	Bonnet clamp bracket	-	4	-	-	-	-
182367	Bonnet clamp bracket--front right	-	-	1	1	-	-
182366	Bonnet clamp bracket--front left	-	-	1	1	-	-

packardinfo.com

Piece No.	Name	No. Required 726 733	740 745	826 833	840 845	901 902	903 904
182369	Bonnet clamp bracket—rear right			1	1		
182368	Bonnet clamp bracket—rear left			1	1		
8201	Bonnet clamp bracket screw (¼"—28 x ⅝" flat head mach.)			4	4		
5502	Lockwasher (¼")			4	4		
7004	Nut (¼"—28)			4	4		
3870	Washer (¼" plain)			4	4		
194659	Bonnet clamp bracket—front right					1	1
194658	Bonnet clamp bracket—front left					1	1
8214	Screw (¼—28 x ¾" flat head)					4	4
5502	Lockwasher (¼")					4	4
3868	Washer (¼")					4	4
7004	Nut (¼"—28)					4	4
194661	Bonnet clamp bracket—rear right					1	
191926	Bonnet clamp bracket—rear right						1
194660	Bonnet clamp bracket—rear left					1	
191927	Bonnet clamp bracket—rear left						1
5909	Screw (5/16—24 x 1½" hex. hd.)					4	4
5504	Lockwasher (5/16")					4	4
7005	Nut (5/16"—24)					4	4
122908	Bonnet clamp bracket reinforcement (polished)	4	4				
132294	Bonnet clamp bracket reinforcement (dull)	2					
7006	Nut (⅜"—24 plain)	4	4				
5006	Lockwasher (⅜")	4	4				
5710	Bonnet clamp to bonnet frame ledge screw (No. 10—32 x ¾" R. H. mach.)	2					
5500	Lockwasher (No. 10)	2					
8002	Bonnet clamp to bonnet frame ledge screw (¼—28 x ¾" O. H. mach.)		4				
5433	Bonnet clamp to bonnet frame ledge rivet (3/16 x ½" rnd. hd.)	6					
7917	Bonnet clamp to bonnet frame ledge rivet (¼ x ⅜" oval hd.)		4				
170717	Bonnet clamp to bonnet frame ledge screw plate	1					
144858	Bonnet clamp to bonnet frame ledge screw plate		2				
182215	Bonnet clamp to bonnet screw			16	16		
5500	Lockwasher (No. 10)			16	16		
7003	Nut (No. 10—32)			16	16		
132268	Bonnet clamp bumper (dull)	4					
163621	Bonnet clamp bumper (polished)	4					
163620	Bonnet clamp bumper		4				
183744	Bonnet clamp guide			4	4		
183745	Bonnet clamp guide back plate			4	4		
182229	Bonnet clamp handle			4	4		
190831	Bonnet clamp handle—left					1	
190832	Bonnet clamp handle—right					1	
190833	Bonnet clamp handle—left						1
190834	Bonnet clamp handle—right						1
194601	Bonnet clamp handle nut					2	2
194602	Bonnet clamp handle lockwasher					2	2
4156	Bonnet clamp handle rivet			4	4		
183747	Bonnet clamp hook			4	4		
183749	Bonnet clamp hook spring			4	4		
190903	Bonnet clamp rod—right					1	
191904	Bonnet clamp rod—left					1	
191144	Bonnet clamp rod—right						1
191903	Bonnet clamp rod—left						1
190962	Bonnet clamp rod bearing					8	8
182215	Bonnet clamp rod bearing screw					16	16
5500	Lockwasher (No. 10)					16	16
7003	Nut (No. 10—32)					16	16
190942	Bonnet clamp operating lever—left					1	1
190943	Bonnet clamp operating lever—right					1	1
190954	Bonnet clamp operating lever bearing plate—left assembly					1	1
190955	Bonnet clamp operating lever bearing plate—right assembly					1	1
191104	Bonnet clamp operating rod—right					1	1

packardinfo.com

Piece No.	Name	No. Required 726 733	740 745	826 833	840 845	901 902	903 904
191105	Bonnet clamp operating rod left					1	1
4690	Cotter pin ($\frac{1}{16}$ x $\frac{3}{8}$")					2	2
183746	Bonnet clamp slide			4	4		
183748	Bonnet clamp slide return spring			4	4		
191917	Bonnet corner guide left					1	
191937	Bonnet corner guide right					1	
191939	Bonnet corner guide						2
121671	Bonnet corner guide (used on 726-733-745)	2	2				
182282	Bonnet corner guide			2	2		
167643	Bonnet corner guide left (used on 740)		1				
167644	Bonnet corner guide right (used on 740)		1				
170448	Bonnet frame ledge left assembly	1					
170449	Bonnet frame ledge left assembly (used on 740)		1				
175329	Bonnet frame ledge left assembly (used on 745) (specify color)		1				
180224	Bonnet frame ledge left assembly			1			
190972	Bonnet frame ledge left assembly					1	
191108	Bonnet frame ledge left assembly						1
170508	Bonnet frame ledge left assembly (used on 745 custom) (specify color)		1				
180225	Bonnet frame ledge left assembly				1		
170453	Bonnet frame ledge right assembly	1					
170454	Bonnet frame ledge right assembly (used on 740)		1				
190973	Bonnet frame ledge right assembly					1	
175289	Bonnet frame ledge right assembly (used on 745) (specify color)		1				
191109	Bonnet frame ledge right assembly						1
180226	Bonnet frame ledge right assembly			1			
170507	Bonnet frame ledge right assembly (used on 745 custom) (specify color)		1				
180227	Bonnet frame ledge right assembly				1		
7827	Bonnet frame ledge to battery box screw ($\frac{1}{4}$—28 x $\frac{3}{4}$" hex. hd.)					1	1
5502	Lockwasher ($\frac{1}{4}$")					2	2
194029	Bonnet frame ledge to frame stud front					2	2
194824	Bonnet frame ledge to frame stud rear						2
5502	Lockwasher ($\frac{1}{4}$")					2	2
194030	Nut					2	2
5781	Bonnet frame ledge to frame bolt ($\frac{1}{4}$—28 x $\frac{3}{4}$" O. H. head)	8	10	8	10		
5502	Lockwasher ($\frac{1}{4}$")	8	10	7	9		
7004	Nut ($\frac{1}{4}$"—28)	8	10	8	10		
191619	Bonnet frame ledge liner retainer					2	2
191151	Bonnet frame ledge screw boss liner					2	2
7801	Bonnet frame ledge bracket screw ($\frac{1}{4}$—28 x $\frac{1}{2}$" hex. hd.)					1	1
7827	Bonnet frame ledge bracket screw ($\frac{1}{4}$—28 x $\frac{3}{4}$" hex. hd.)					2	2
7004	Nut ($\frac{1}{4}$"—28)					3	5
5502	Lockwasher ($\frac{1}{4}$")					5	5
62065	Washer ($\frac{17}{64}$ x $\frac{3}{4}$")					4	4
5701	Bonnet frame ledge screw ($\frac{1}{4}$—28 x $\frac{9}{16}$" flat hd.)						4
191264	Bonnet frame ledge spacer						2
5781	Bonnet frame ledge to front spring bracket screw ($\frac{1}{4}$—28 x $\frac{3}{4}$" oval hd. mach.)	2	2	2	2		
5781	Bonnet to frame ledge to radiator splasher screw ($\frac{1}{4}$—28 x $\frac{3}{4}$" oval hd. mach.)	2	2	2	2		
8212	Bonnet frame ledge to running board spacer screw (No. 10—32 x $\frac{7}{16}$" flat hd.)	1	2				
170462	Bonnet frame ledge to running board splasher spacer	1					
194761	Bonnet frame ledge to tool box stud					1	1
7004	Nut ($\frac{1}{4}$"—28)					1	1
62065	Washer ($\frac{17}{64}$ x $\frac{3}{4}$")					2	2
61041	Bonnet handle (black enamel)	2	4	2	4		
163811	Bonnet handle (polished)	2	4	2	4		
162629	Bonnet handle reinforcement	2	2	2	4		
5585	Bonnet handle rivet (2126—$\frac{3}{16}$ x $\frac{9}{32}$" rnd. hd. tubg.)	4	8	4	8		
58267	Bonnet handle rivet (No. 1682—$\frac{3}{16}$ x $\frac{9}{32}$" rnd. hd. tubg.)	4	8	4	8		
170409	Bonnet hinge side pin	2		2			
186423	Bonnet hinge side pin					2	
175308	Bonnet hinge side pin (used on 745)		2				
170407	Bonnet hinge side pin (used on 740 and 745 custom)		2		2		
190965	Bonnet hinge side pin						2
170443	Bonnet hinge top	1		1			

packardinfo.com

Printed in U. S. A.

Piece No.	Name	No. Required 726 733	740 745	826 833	840 845	901 902	903 904
190712	Bonnet hinge top					1	
170411	Bonnet hinge top (used on 740 and 745 custom)		1		1		
191429	Bonnet hinge top						1
175305	Bonnet hinge top (used on 745)		1				
22274	Rivet (No. 1528 $\frac{9}{64}$ x $\frac{3}{16}$" oval hd. tub.)	38	48				
128819	Rivet (No. 1528 $\frac{9}{64}$ x $\frac{7}{32}$" oval hd. tub.)			38	42		
46527	Rivet (No. 632 $\frac{9}{64}$ x $\frac{1}{4}$" oval hd. tub.)					36	40
21964	Rivet (No. 632 $\frac{9}{64}$ x $\frac{5}{16}$" flat hd. tub.)					4	4
170444	Bonnet hinge top pin	1		1			
170445	Bonnet hinge top pin (used on 740 and 745 custom)		1		1		
175312	Bonnet hinge top pin (used on 745)		1				
101273	Bonnet hinge top pin end	1	1	1	1		
190739	Bonnet hinge top rear bracket					1	1
5565	Screw ($\frac{1}{4}$ 28 x $\frac{1}{2}$" oval hd.)					2	2
5396	Lockwasher ($\frac{1}{4}$" countersunk shakeproof)					2	2
101275	Bonnet lock plunger	1		1			
163423	Bonnet lock plunger		1		1		
101276	Bonnet lock plunger spring	1	1	1	1		
101510	Bonnet lock plunger thumb piece	1	1	1	1		
147246	Bonnet side door assembly	6	8	6	8		
194767	Bonnet side bumper right					1	
194766	Bonnet side bumper left					1	
194793	Bonnet side bumper right						1
194792	Bonnet side bumper left						1
194796	Bonnet side bumper rivet (No. 24 $\frac{9}{64}$ x $\frac{5}{16}$" O. H. tubing)					10	12
191477	Bonnet side door left assembly (chromium)					4	4
194568	Bonnet side door left assembly					4	4
194569	Bonnet side door right assembly					4	4
194570	Bonnet side door right assembly (chromium)					4	4
191161	Bonnet side door hinge washer					8	8
191157	Bonnet side door hinge rivet					16	16
3905	Bonnet side door hinge rivet washer					16	16
191656	Bonnet side door knob					8	8
5694	Screw					8	8
5695	Lockwasher (No. 8)					8	8
3866	Washer					8	8
147282	Bonnet side door hinge pin	6	8	6	8		
147283	Bonnet side door hinge spring	6	8	6	8		
171755	Bonnet side door lock plunger	6	8	6	8		
5773	Nut (No. 6 40 plain)	6	8	6	8		
5435	Plain washer (No. 8)	6	8	6	8		
171751	Bonnet side door lock plunger handle	6	8	6	8		
5225	Lockwasher ($\frac{11}{64}$" special)	6	8	6	8		
147287	Bonnet side door lock plunger spring	6	8	6	8		
191159	Bonnet side door spring					8	8
181082	Bonnet top check assembly	3	3				
178815	Bonnet top moulding bumper (used on 745)		2				
182324	Bonnet top moulding bumper				2	2	2
181859	Bonnet top rest right			1			
181874	Bonnet top rest right				1		
181875	Bonnet top rest left				1		
181868	Bonnet top rest left			1			

BRAKES

178679	Brake linkage changeover equipment (726)	1					
179276	Brake linkage changeover equipment (733-740)	1	1				
179277	Brake linkage changeover equipment (745)		1				
178680	Brake linkage changeover equipment (745 custom)		1				
179200	Brake assembly front right (complete)	1		1			
190758	Brake assembly front right (complete)					1	
179060	Brake assembly front right (complete)		1		1		
190760	Brake assembly front right (complete)						1

packardinfo.com

Piece No.	Name	No. Required 726 733	740 745	826 833	840 845	901 902	903 904
179201	Brake assembly—front—left (complete)	1	..	1	..	..	..
190757	Brake assembly—front—left (complete)	..	..	..	..	1	..
179061	Brake assembly—front—left (complete)	..	1	..	1	..	..
190759	Brake assembly—front—left (complete)	..	..	..	..	..	1
179194	Brake assembly—rear—right (complete)	1	..	1	..	..	..
191061	Brake assembly—rear—right (complete)	..	..	..	..	1	..
179198	Brake assembly—rear—right (complete)	..	1	..	1	..	..
191063	Brake assembly—rear—right (complete)	..	..	..	..	..	1
179195	Brake assembly—rear—left (complete)	1	..	1	..	..	..
191062	Brake assembly—rear—left (complete)	..	..	..	..	1	..
179197	Brake assembly—rear—left (complete)	..	1	..	1	..	..
191064	Brake assembly—rear—left (complete)	..	..	..	..	..	1
138917	Brake assembly—front—retaining bolt	16	16	16	16	16	16
7809	Brake assembly—front—retaining screw ($\frac{5}{16}$—24 x $\frac{7}{8}$" hex. hd.)	8	8	8	8	8	8
7005	Nut ($\frac{5}{16}$"—24 plain)	16	16	16	16	16	16
5504	Lockwasher ($\frac{5}{16}$")	24	24	24	24	24	24
137960	Brake adjusting nut	4	4	4	4	4	4
7405	Lock nut ($\frac{5}{16}$"—24 plain)	4	4	4	4	4	4
5504	Lockwasher ($\frac{5}{16}$")	4	4	4	4	4	4
138694	Brake adjusting nut spring	4	4	4	4	4	4
7005	Brake adjusting spring stop nut ($\frac{5}{16}$"—24 plain)	4	4	4	4	4	4
163418	Brake camshaft rear bracket support	..	2	..	2	..	..
191006	Brake camshaft rear bracket support	..	..	..	..	2	..
163419	Brake camshaft rear bracket support	2	..	2	..	..	..
191007	Brake camshaft rear bracket support	..	..	..	..	..	2
139509	Brake camshaft rear bracket support spacer	4	4	4	4	..	..
169198	Brake (front) camshaft—right	1	1	1	1	1	1
169199	Brake (front) camshaft—left	1	1	1	1	1	1
169323	Brake (front) camshaft bracket—left	1	1	1	1	1	1
169322	Brake (front) camshaft bracket—right	1	1	1	1	1	1
163461	Bolt	4	4	4	4	4	4
163435	Nut (special)	4	4	4	4	4	4
4291	Cotter pin ($\frac{3}{32}$ x $\frac{3}{4}$")	4	4	4	4	4	4
163455	Brake (front) camshaft bracket bolt nut tension spring	4	4	4	4	4	4
169195	Brake (front) camshaft retaining key	2	2	2	2	2	2
169194	Brake (front) camshaft retaining key dust washer	2	2	2	2	2	2
164003	Brake (rear) camshaft	2	2	2	2	2	2
163425	Brake (rear) camshaft bearing felt washer	2	2	2	2	2	2
163429	Brake (rear) camshaft bearing washer—outer	2	2	2	2	2	2
5421	Brake (rear) camshaft bearing lubricator plug ($\frac{1}{8}$" pipe hex. hd.)	2	2	2	2	2	2
163427	Brake (rear) camshaft bracket	2	2	2	2	2	2
163461	Bolt	4	4	4	4	4	4
163435	Nut	4	4	4	4	4	4
4291	Cotter pin ($\frac{3}{32}$ x $\frac{3}{4}$")	4	4	4	4	4	4
163455	Brake (rear) camshaft bracket bolt nut tension spring	4	4	4	4	4	4
163424	Brake (rear) camshaft bushing	4	4	4	4	4	4
164008	Brake (rear) camshaft lever	2	2	2	2	..	..
194777	Brake (rear) camshaft lever—left	..	..	..	..	1	1
194778	Brake (rear) camshaft lever—right	..	..	..	..	1	1
7812	Brake (rear) camshaft lever clamp bolt ($\frac{5}{16}$—24 x $1\frac{3}{4}$" hex. hd.)	2	2	2	2	2	2
7005	Nut ($\frac{5}{16}$"—24)	2	2	2	2	2	2
5504	Lockwasher ($\frac{5}{16}$")	2	2	2	2	2	2
163469	Brake (rear) camshaft retaining washer	2	2	2	2	2	2
170219	Brake (front) connecting cable assembly	2	..	2	..	..	..
190854	Brake (front) connecting cable assembly	..	..	..	..	2	..
174667	Brake (front) connecting cable assembly (used on 745)	..	2	..	..	..	..
157945	Brake (front) connecting cable assembly (used on 740 and 745 custom)	..	2	..	2	..	..
190855	Brake (front) connecting cable assembly	..	..	..	..	..	2
7515	Yoke end adj. ($\frac{5}{16}$")	2	2	2	2	2	2
7525	Yoke end pin ($\frac{5}{16}$")	2	2	2	2	2	2
7005	Nut ($\frac{5}{16}$"—24)	2	2	2	2	2	2
4290	Cotter ($\frac{3}{32}$ x $\frac{5}{8}$")	2	2	2	2	2	2
190291	Washer—spring ($\frac{5}{16}$")	2	2	2	2	2	2

packardinfo.com

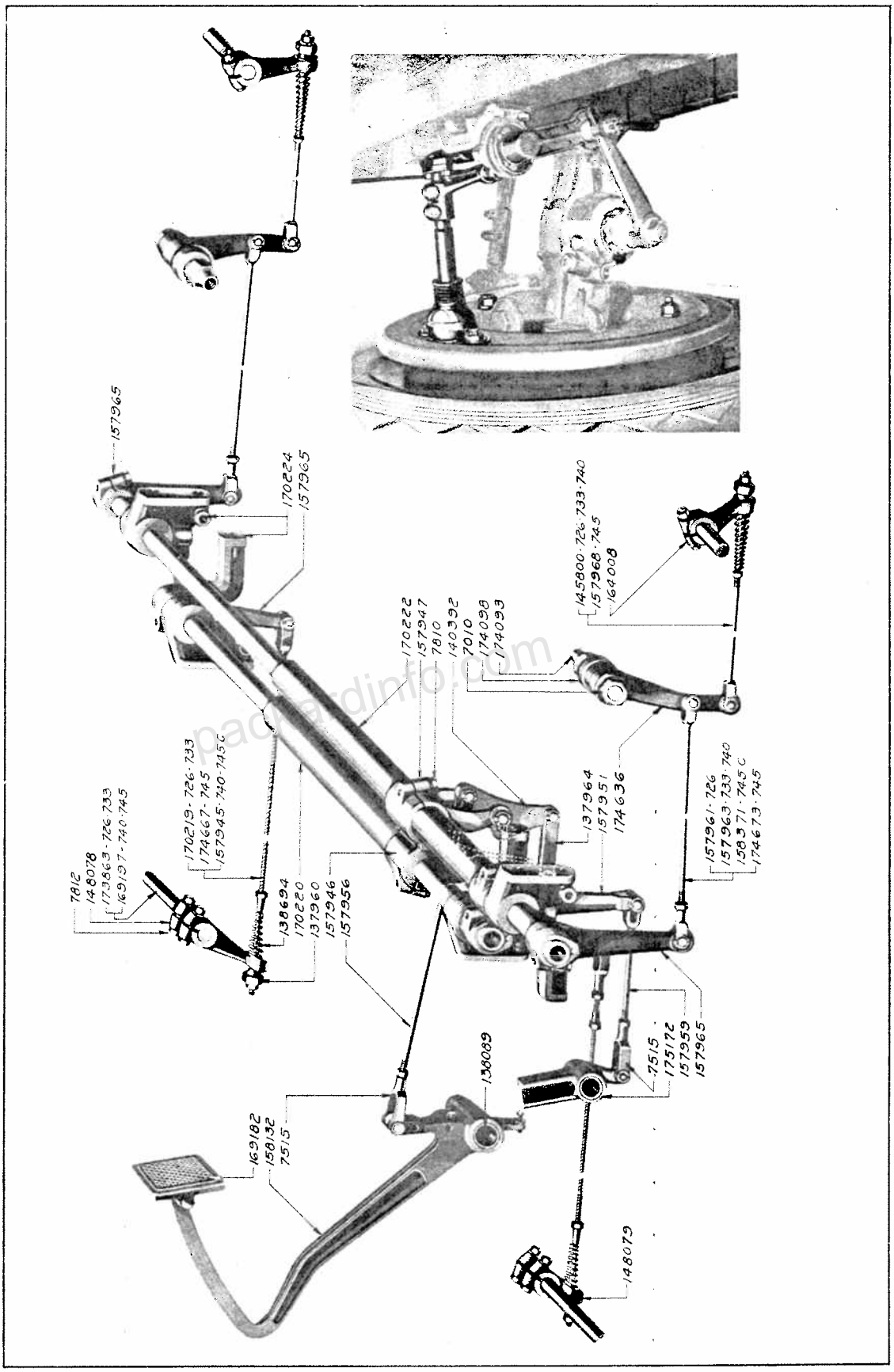

Prior to Frame No. 289100 for 726-733, 182055 for 740 and 181421 for 745
726-733-740-745

Piece No.	Name	No. Required 726 733	740 745	826 833	840 845	901 902	903 904
126828	Brake (front) connecting cable frame ferrule—inner	2	2	2	2	2	2
126587	Brake (front) connecting cable frame ferrule—outer	2	2	2	2	2	2
7827	Screw ($\frac{1}{4}$—28 x $\frac{3}{4}$" hex. hd.)	8	8	8	8	8	8
7004	Nut ($\frac{1}{4}$"—28 plain)	8	8	8	8	8	8
5502	Lockwasher ($\frac{1}{4}$")	8	8	8	8	8	8
157961	Brake (rear) connecting rod—long assembly (used on 726) (prior to frame No. 289100)	2					
179538	Brake (rear) connecting rod—long assembly (used on 726) (after frame No. 289099)	2					
182033	Brake (rear) connecting rod—long assembly (used on 826)			2			
191028	Brake (rear) connecting rod—long assembly (used on 901)					2	
157963	Brake (rear) connecting rod—long assembly (used on 733-740) (prior to frame No. 289100 for 733 and 182054 for 740)	2	2				
179539	Brake (rear) connecting rod—long assembly (used on 733-740) (after frame No. 289099 for 733 and 182055 for 740)	2	2				
182034	Brake (rear) connecting rod—long assembly (used on 833-840)			2	2		
191029	Brake (rear) connecting rod—long assembly (used on 902-903)					2	2
174673	Brake (rear) connecting rod—long assembly (used on 745) (prior to frame No. 181421)		2				
179541	Brake (rear) connecting rod—long assembly (used on 745) (after frame No. 181420)		2				
182045	Brake (rear) connecting rod—long assembly (used on 845)				2		
191030	Brake (rear) connecting rod—long assembly (used on 904)						2
158371	Brake (rear) connecting rod—long assembly (used on 745 custom) (prior to frame No. 181421)		2				
179542	Brake (rear) connecting rod—long assembly (used on 745 custom) (after frame No. 181420)		2				
7525	Yoke end pin ($\frac{5}{16}$")	4	4	4	4	3	3
114335	Yoke end pin (spec.)					1	1
4290	Cotter ($\frac{1}{32}$ x $\frac{5}{8}$")	4	4	4	4	4	4
190291	Spring washer ($\frac{5}{16}$")	4	4	4	4	4	4
157968	Brake (rear) connecting rod—short assembly (used on 745) (prior to frame No. 183050)		2				
179549	Brake (rear) connecting rod—short assembly (used on 745) (after frame No. 183049)		2	2	2		
191022	Brake (rear) connecting rod—short assembly					2	2
145800	Brake (rear) connecting rod—short assembly (used on 726-733-740) (prior to frame No. 291546 for 726-733 and 182927 for 740)	2	2				
179548	Brake (rear) connecting rod—short assembly (used on 726-733-740) (after frame No. 291545 for 726-733 and 182926 for 740)	2	2				
7525	Yoke end pin ($\frac{5}{16}$")	2	2	2	2	2	2
4290	Cotter ($\frac{1}{32}$ x $\frac{5}{8}$")	2	2	2	2	2	2
190291	Spring washer ($\frac{5}{16}$")	2	2	2	2	2	2
174636	Brake (rear) connecting rod lever and bushing assembly (prior to frame No. 289100 for 726-733, 182055 for 740 and 181421 for 745)	2	2				
179214	Brake (rear) connecting rod lever and bushing assembly (after frame No. 289099 for 726-733, 182054 for 740 and 181420 for 745)	2	2				
184467	Brake (rear) connecting rod lever and bushing assembly			2	2	2	2
174096	Bushing	2	2	2	2	2	2
174098	Brake (rear) connecting rod lever shaft	2	2	2	2	2	2
174093	Screw	2	2	2	2	2	2
173398	Washer ($\frac{5}{8}$" plain)	2	2	2	2	2	2
7010	Nut ($\frac{5}{8}$"—18)	2	2	2	2	2	2
5514	Lockwasher ($\frac{5}{8}$")	2	2	2	2	2	2
140392	Brake equalizer (prior to frame No. 289100 for 726-733, 182055 for 740 and 181421 for 745)	1	1				
137964	Brake equalizer link (prior to frame No. 289100 for 726-733, 182055 for 740 and 181421 for 745)	2	2				
7525	Yoke end pin ($\frac{5}{16}$") (prior to frame No. 289100 for 726-733, 182055 for 740 and 181421 for 745)	2	2				

packardinfo.com

Piece No.	Name	No. Required 726 733	740 745	826 833	840 845	901 902	903 904
4290	Cotter ($\frac{3}{32}$ x $\frac{3}{4}$") (prior to frame No. 289100 for 726-733, 182055 for 740 and 181421 for 745)	2	2				
3908	Washer ($\frac{5}{16}$" plain) (prior to frame No. 289100 for 726-733, 182055 for 740 and 181421 for 745)	4	4				
175172	Brake lever assembly (hand) (prior to frame No. 289100 for 726-733, 182055 for 740 and 181421 for 745)	1	1				
179215	Brake lever assembly (hand) (after frame No. 289099 for 726-733, 182054 for 740 and 181420 for 745)	1	1	1	1		
191432	Brake lever assembly (hand)					1	1
175171	Brake lever bushing	1	1	1	1		
191043	Brake lever bushing					1	1
157959	Brake lever connecting rod assembly (prior to frame No. 289100 for 726-733, 182055 for 740 and 181421 for 745)	1	1				
179185	Brake lever connecting rod assembly (after frame No. 289099 for 726-733, 182054 for 740 and 181420 for 745)	1	1	1	1		
191056	Brake lever connecting rod assembly					1	1
114335	Yoke end pin (spring head special)	1	1	1	1		
7525	Yoke end pin ($\frac{5}{16}$")	1	1	1	1	2	2
4291	Cotter ($\frac{3}{32}$ x $\frac{3}{4}$")	2	2	2	2	2	2
7515	Yoke end adj. ($\frac{5}{16}$")	1	1	1	1		
7005	Nut ($\frac{5}{16}$"—24 plain)	1	1	1	1	1	1
190291	Spring washer ($\frac{5}{16}$")	1	1	1	1	1	1
157951	Brake lever connecting rod lever	1	1	1	1		
191773	Brake lever connecting rod lever					1	1
7810	Clamp screw ($\frac{5}{16}$—24 x 1 $\frac{1}{4}$" hex. hd.)	1	1	1	1	1	1
5504	Lockwasher ($\frac{5}{16}$")	1	1	1	1	1	1
5550	Key rectangular ($\frac{1}{4}$ x $\frac{5}{16}$ x 1 $\frac{1}{4}$")	1	1	1	1	1	1
190291	Spring washer	1	1	1	1	1	1
175166	Brake lever latch rod assembly	1	1	1	1		
191050	Brake lever latch rod assembly					1	1
101808	Brake lever latch rod knob	1	1	1	1	1	1
116504	Brake lever latch rod knob stop rivet	1	1	1	1	1	1
101810	Brake lever latch spring	1	1	1	1	1	1
157952	Brake lever retracting spring	1	1	1	1		
191804	Brake lever retracting spring					1	1
191803	Brake lever retracting spring pin					1	1
179530	Brake lever retracting spring bracket	1	1	1	1		
114286	Brake lever sector	1	1	1	1		
191045	Brake lever sector					1	1
7815	Screw ($\frac{5}{16}$—24 x 1 $\frac{1}{2}$" hex. hd.)	2	2	2	2		
191046	Stud					2	2
5504	Lockwasher ($\frac{5}{16}$")	2	2	2	2	4	4
5506	Lockwasher ($\frac{3}{8}$")					2	2
7005	Nut ($\frac{5}{16}$"—24)	2	2	2	2	4	4
7006	Nut ($\frac{3}{8}$"—24)					2	2
191052	Brake lever sector cover gasket					1	1
191053	Brake lever sector cover and gasket assembly					1	1
186595	Brake lever sector cover grommet assembly					1	1
191044	Brake lever sector cover stud					2	2
5506	Lockwasher ($\frac{3}{8}$")					2	2
7006	Nut ($\frac{3}{8}$"—24)					2	2
5504	Lockwasher ($\frac{5}{16}$")					2	2
7005	Nut ($\frac{5}{16}$"—24)					2	2
118104	Brake lever sector spacer	2	2	2	2		
175167	Brake lever shaft	1	1	1	1		
175168	Brake lever shaft washer ($\frac{5}{8}$" spec.)	1	1				
181426	Brake lever shaft washer ($\frac{5}{8}$" spec.)			1	1		
7010	Nut ($\frac{5}{8}$"—18)	1	1	1	1		
5514	Lockwasher ($\frac{5}{16}$")	1	1	1	1		
138546	Brake lever splasher	1	1				
181422	Brake lever splasher			1	1		

packardinfo.com

Piece No.	Name	No. Required 726 733	740 745	826 833	840 845	901 902	903 904
7801	Bolt (1/4" - 28 x 1/2" hex. hd.)	3	3	3	3	..	..
7004	Nut (1/4" - 28 plain)	2	2	2	2	..	..
5502	Lockwasher (1/4")	3	3	3	3	..	..
169197	Brake (front) operating shaft	..	2	..	2	..	..
190549	Brake (front) operating shaft	..	..	..	..	2	..
173863	Brake (front) operating shaft	2	..	2	..	..	2
148078	Brake (front) operating shaft lever—right	1	1	1	1	1	1
148079	Brake (front) operating shaft lever—left	1	1	1	1	1	1
7812	Clamp bolt (5/16"—24 x 1 3/4" hex. hd.)	4	4	4	4	4	4
7005	Nut (5/16"—24)	4	4	4	4	4	4
5504	Lockwasher (5/16")	4	4	4	4	4	4
146091	Brake (front) operating shaft oil restriction	2	2	2	2	2	2
138753	Brake (front) operating shaft support arm right assembly	1	1	1	1	1	1
138754	Brake (front) operating shaft support arm left assembly	1	1	1	1	1	1
138891	Plug expansion (5/16")	2	2	2	2	2	2
138898	Oil restriction (short)	2	2	2	2	2	2
138897	Oil restriction (long)	2	2	2	2	2	2
194992	Brake (front) operating shaft support arm ball	2	2	2	2	2	2
194960	Brake (front) operating shaft support arm ball cap	..	..	..	..	2	2
195900	Brake (front) operating shaft support arm ball cap spring	..	..	..	..	2	2
148098	Brake (front) operating shaft support arm ball oil retainer	2	2	2	2	2	2
141960	Brake (front) operating shaft support arm ball oil restriction	2	2	2	2	2	2
145668	Brake (front) operating shaft support arm bracket assembly	2	2	2	2	2	2
166870	Screw (3/8—24 x 15/16")	2	2	2	2	4	4
156938	Screw (3/8—24 x 1 1/8" hex. hd.)	2	2	2	2	..	..
7823	Screw (3/8—24 x 15/16") hex. hd.)	2	..	..	..	..	..
5506	Lockwasher (3/8")	4	4	4	4	4	4
7106	Nut (3/8"—24 castle)	4	4	4	4	4	4
4290	Cotter pin (3/32 x 5/8")	4	4	4	4	4	4
138705	Brake (front) operating shaft support arm bracket bushing	4	4	4	4	4	4
138896	Brake (front) operating shaft support arm bracket oil restriction	2	2	2	2	2	2
137974	Brake (front) operating shaft support arm cap	2	2	2	2	2	2
7827	Screw (1/4—28 x 3/4" hex. hd.)	4	4	4	4	4	4
5502	Lockwasher (1/4")	4	4	4	4	4	4
138706	Shim (.002")	x	x	x	x	x	x
138707	Shim (.005")	x	x	x	x	x	x
138708	Shim (.015")	x	x	x	x	x	x
7826	Brake (front) operating shaft support arm retaining screw (5/16"—24 x 5/8" hex. hd.)	2	2	2	2	2	2
137972	Washer	2	2	2	2	2	2
5504	Lockwasher (5/16")	2	2	2	2	2	2
138890	Oil retainer	2	2	2	2	2	2
140083	Brake (front) operating shaft support arm spring washer	2	2	2	2	2	2
158132	Brake pedal (prior to frame 289100 for 726-33, 182055 for 740, 181421 for 745)	1	1	..	..	..	..
179181	Brake pedal (after frame 289099 for 726-33, 182054 for 740, 181420 for 745)	1	1	..	..	..	..
181407	Brake pedal	..	..	1	1	..	..
191775	Brake pedal	..	..	..	..	1	1
138089	Brake pedal bushing	1	1	1	1	..	..
157956	Brake pedal connecting rod assembly (prior to frame No. 289100 for 726-733, 182055 for 740 and 181421 for 745)	1	1	..	..	..	..
179161	Brake pedal connecting rod assembly—upper (after frame No. 289099 for 726-733, 182054 for 740 and 181420 for 745)	1	1	1	1	..	..
191035	Brake pedal connecting rod assembly—upper	..	..	..	..	1	1
179193	Brake pedal connecting rod assembly—lower (after frame No. 289099 for 726-733, 182054 for 740 and 181420 for 745)	1	1	1	1	..	..
191038	Brake pedal connecting rod assembly—lower	..	..	..	..	1	1
178642	Yoke end adjusting—lower (after frame No. 289099 for 726-733, 182054 for 740 and 181420 for 745)	1	1	1	1	1	1
7006	Nut (3/8"—24 plain)—lower (after frame No. 289099 for 726-733, 182054 for 740 and 181420 for 745)	1	1	1	1	1	1
7515	Brake pedal connecting rod adj. yoke end (5/16")—upper	1	1	1	1	1	1
7005	Nut (5/16"—24 plain)—upper	1	1	1	1	1	1

Printed in U. S. A.

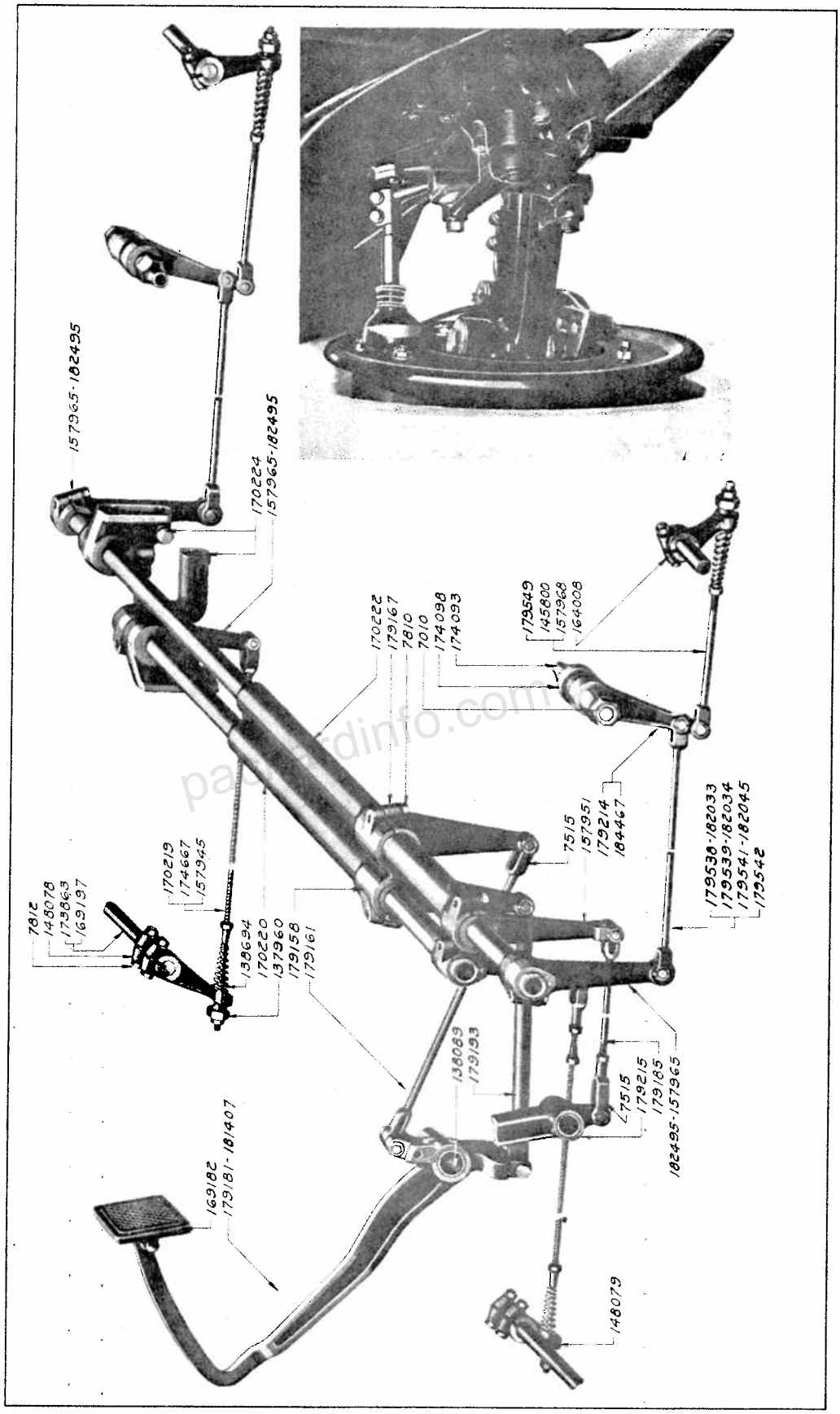

After Frame No. 289099 for 726-733, 182054 for 740 and 181420 for 745

726-733-740-745
826-833-840-845

Piece No.	Name	No. Required 726 733	740 745	826 833	840 845	901 902	903 904
7525	Yoke end pin ($\frac{5}{16}$")	4	4	4	4	4	4
4290	Cotter ($\frac{3}{32}$ x $\frac{5}{8}$")	4	4	4	4	4	4
190291	Spring washer ($\frac{5}{16}$")	4	4	4	4	4	4
169181	Brake pedal pad	1	1	..	..	..	..
181402	Brake pedal pad assembly	..	..	1	1	1	1
5394	Screw ($\frac{3}{8}$"—24 x 1$\frac{1}{2}$" hex. hd.)	1	1	..	..	..	..
8043	Screw ($\frac{5}{16}$"—24 x 1$\frac{1}{4}$" hex. hd.)	..	..	1	1	1	1
7006	Nut ($\frac{3}{8}$"—24 plain)	1	1	..	..	..	..
7005	Nut ($\frac{5}{16}$"—24 plain)	..	..	1	1	1	1
5506	Lockwasher ($\frac{3}{8}$")	1	1	..	..	..	..
5504	Lockwasher ($\frac{5}{16}$")	..	..	1	1	1	1
177286	Brake pedal pad assembly (extension type)	1	1	1	1	1	1
169182	Brake pedal pad tread	1	1	1	1	1	1
126506	Brake pedal retracting spring	1	1	1	1	..	..
191103	Brake pedal retracting spring	..	..	..	..	1	1
5538	Pin-dowel ($\frac{1}{4}$ x $\frac{25}{32}$")	1	1	1	1	..	..
191039	Pin	..	..	..	..	1	1
127031	Brake pedal retracting spring seat	1	1	1	1	..	..
158130	Brake pedal retracting spring stud	1	1	1	1	..	..
158099	Brake pedal shaft	1	1	1	1	..	..
190911	Brake pedal shaft	..	..	..	..	1	1
7006	Brake pedal shaft nut ($\frac{3}{8}$"—24)	..	..	..	..	1	1
5506	Lockwasher ($\frac{3}{8}$")	..	..	..	..	1	1
5914	Washer—plain	..	..	..	..	1	1
190961	Brake pedal shaft oil restriction	..	..	..	..	1	1
190912	Brake pedal shaft spring washer	..	..	..	..	1	1
191048	Spring washer ($\frac{15}{16}$")	..	..	..	..	1	1
191047	Brake pedal shaft sleeve	..	..	..	..	1	1
190927	Brake pedal shaft spacer (used on 901-902-903)	..	..	..	..	3	3
190928	Brake pedal shaft spacer (used on 904)	..	..	..	..	..	2
190904	Brake pedal shaft stop light switch housing	..	..	..	..	1	1
7812	Clamp screw ($\frac{5}{16}$"—24 x 1$\frac{3}{4}$" hex. hd.)	..	..	..	..	1	1
5504	Lockwasher ($\frac{5}{16}$")	..	..	..	..	1	1
7005	Nut ($\frac{5}{16}$"—24 plain)	..	..	..	..	1	1
158029	Brake pedal shaft support	1	1	..	..	..	..
183073	Brake pedal shaft support	..	..	1	1	..	..
190909	Brake pedal shaft support	..	..	..	..	1	1
7815	Screw ($\frac{5}{16}$"—24 x 1$\frac{1}{2}$" hex. hd.)	4	4	4	4	..	..
5504	Lockwasher ($\frac{5}{16}$")	4	4	4	4	..	..
138093	Brake pedal spacer	1	1	1	1	..	..
170220	Brake shaft (front) assembly	1	1	1	1	..	..
191778	Brake shaft (front) assembly	..	..	..	..	1	1
170222	Brake shaft (rear) assembly	1	1	1	1	..	..
191783	Brake shaft (rear) assembly	..	..	..	..	1	1
179534	Brake shaft (front) bracket	2	2	2	2	..	..
170224	Brake shaft (rear) bracket—left	1	1	1	1	..	..
179534	Brake shaft (rear) bracket—right	1	1	1	1	..	..
7818	Bolt ($\frac{3}{8}$"—24 x $\frac{7}{8}$" hex. hd.)	12	12	12	12	..	..
5506	Lockwasher ($\frac{3}{8}$")	12	12	12	12	..	..
191777	Brake shaft bracket—right	..	..	..	..	1	1
191776	Brake shaft bracket—left	..	..	..	..	1	1
5919	Screw ($\frac{3}{8}$"—24 x 1$\frac{3}{4}$" hex. hd.)	..	..	..	..	7	7
5506	Lockwasher ($\frac{3}{8}$")	..	..	..	..	8	8
7006	Nut ($\frac{3}{8}$"—24)	..	..	..	..	8	8
7824	Screw ($\frac{1}{4}$"—28 x $\frac{5}{8}$" hex. hd.)	..	..	..	..	3	3
5502	Lockwasher ($\frac{1}{4}$")	..	..	..	..	3	3
191058	Brake shaft bracket screw—long	..	..	..	..	1	1
191673	Brake shaft bracket cap—left	..	..	..	..	1	1
191674	Brake shaft bracket cap—right	..	..	..	..	1	1
191692	Brake shaft bracket gasket	..	..	..	..	2	2
157948	Brake shaft (rear) bracket—left stop pin	1	1	1	1	..	..

packardinfo.com

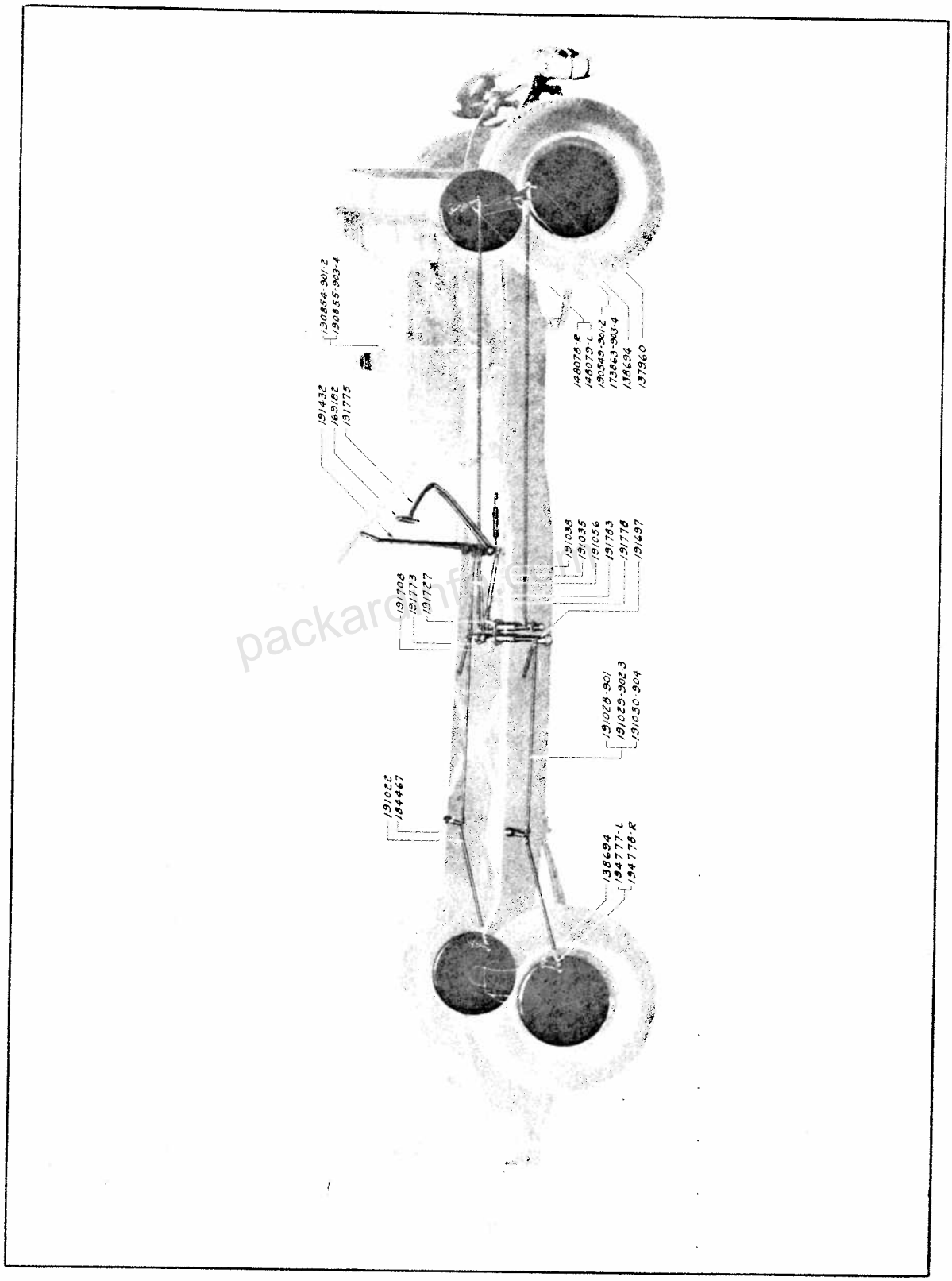

901-902-903-904

packardinfo.com

Piece No.	Name	No. Required 726 733	740 745	826 833	840 845	901 902	903 904
191781	Brake shaft (front) bushing	..	..	..	..	2	2
191015	Brake shaft (rear) bushing—large	..	..	..	..	1	1
191014	Brake shaft (rear) bushing—small	..	..	..	..	1	1
157946	Brake shaft (front) lever center (prior to frame No. 289100 for 726-733, 182055 for 740 and 181421 for 745)	1	1	..	..	..	..
191727	Brake shaft (front) lever center	..	..	..	..	1	1
179158	Brake shaft (front) lever center (after frame No. 289099 for 726-733, 182054 for 740 and 181420 for 745)	1	1	1	1	..	..
7810	Clamp screw ($\frac{5}{16}$—24 x $1\frac{1}{4}$" hex. hd.)	1	1	1	1	1	1
5504	Lockwasher ($\frac{5}{16}$")	1	1	1	1	1	1
5550	Key rectangular ($\frac{1}{4}$ x $\frac{5}{16}$ x $1\frac{1}{4}$")	1	1	1	1	1	1
157965	Brake shaft (front) lever outboard	2	2	2	2	..	..
191697	Brake shaft lever	..	..	..	..	4	4
7810	Clamp screw ($\frac{5}{16}$—24 x $1\frac{1}{4}$" hex. hd.)	2	2	2	2	4	4
5504	Lockwasher ($\frac{5}{16}$")	2	2	2	2	4	4
5548	Key ($\frac{5}{16}$ x $1\frac{1}{8}$")	2	2	2	2	4	4
157947	Brake shaft (rear) lever—center (prior to frame No. 289100 for 726-733, 182055 for 740 and 181421 for 745)	1	1	..	..	..	..
191708	Brake shaft (rear) lever center	..	..	..	..	1	1
179167	Brake shaft (rear) lever—center (after frame No. 289099 for 726-733, 182054 for 740 and 181420 for 745)	1	1	1	1	..	..
7528	Yoke end pin ($\frac{1}{2}$")	1	1	..	..	..	..
4305	Cotter ($\frac{1}{8}$ x $\frac{7}{8}$")	1	1	..	..	..	..
7810	Clamp screw ($\frac{5}{16}$—24 x $1\frac{1}{4}$")	1	1	1	1	1	1
5504	Lockwasher ($\frac{5}{16}$")	1	1	1	1	1	1
5550	Key - rectangular ($\frac{1}{4}$ x $\frac{5}{16}$ x $1\frac{1}{4}$")	1	1	1	1	1	1
157965	Brake shaft (rear) lever outboard	2	2	..	..	..	..
182495	Brake shaft (rear) lever outboard	..	..	2	2	..	..
7810	Clamp screw ($\frac{5}{16}$—24 x $1\frac{1}{4}$" hex. hd.)	2	2	2	2	..	..
5504	Lockwasher ($\frac{5}{16}$")	2	2	2	2	..	..
5548	Key ($\frac{5}{16}$ x $1\frac{1}{8}$")	2	2	2	2	..	..
157953	Brake shaft (rear) retracting spring	1	1	1	1	..	..
191805	Brake shaft (rear) retracting spring	..	..	..	..	1	1
176258	Brake shoe (auxiliary) assembly	4	..	4	..	4	..
164635	Brake shoe (auxiliary) assembly	..	4	..	4	..	4
164636	Brake shoe (primary) assembly	..	4	..	4	..	4
175851	Brake shoe (primary) assembly	4	..	4	..	4	..
163436	Brake shoe anchor pin	8	8	8	8	8	8
4334	Cotter pin ($\frac{3}{16}$ x $1\frac{3}{4}$")	8	8	8	8	8	8
5629	Lockwasher ($\frac{3}{4}$")	8	8	8	8	8	8
163464	Nut	8	8	8	8	8	8
163463	Brake shoe anchor pin washer	8	8	8	8	8	8
163468	Brake shoe anchor plate	4	4	4	4	4	4
163456	Brake shoe articulating pin	4	4	4	4	4	4
163465	Brake shoe adjusting cam	4	4	4	4	4	4
7008	Nut ($\frac{1}{2}$"—20 plain)	4	4	4	4	4	4
5510	Lockwasher ($\frac{1}{2}$")	4	4	4	4	4	4
163434	Brake shoe (primary and auxiliary) lining	..	8	..	8	..	8
173861	Brake shoe (primary and auxiliary) lining	8	..	8	..	8	..
164004	Brake shoe (primary and auxiliary) spring	4	4	4	4	4	4
175849	Brake shoe (secondary) assembly	4	..	4	..	4	..
164637	Brake shoe (secondary) assembly	..	4	..	4	..	4
179336	Brake shoe (secondary)—filler block (prior to frame No. 289100)	1	..	..	..	..	..
179337	Brake shoe (secondary)—filler block (prior to frame No. 182055 for 740 and 181421 for 745)	..	1	..	..	..	..
179199	Brake shoe (secondary) lining	4	..	4	..	4	..
179153	Brake shoe (secondary) lining	..	4	..	4	..	4
148081	Brake shoe lining rivet (.143 diameter x $\frac{5}{16}$")	128	128	..	..	..	..
179954	Brake shoe lining rivet (.143 diameter x $\frac{1}{4}$")	128	128	128	128	128	128

packardinfo.com

Piece No.	Name	No. Required 726 733	740 745	826 833	840 845	901 902	903 904
164005	Brake shoe (secondary) spring	4	4	4	4	4	4
163454	Brake shoe (secondary) spring anchor	4	4	4	4	4	4
166832	Brake shoe (secondary) spacer spring	4	4	4	4	4	4
163453	Brake shoe steady pin	4	4	4	4	4	4
4289	Cotter pin ($\frac{3}{32}$ x $\frac{1}{2}$")	4	4	4	4	4	4
144567	Washer—large	8	8	8	8	8	8
148085	Washer—small	4	4	4	4	4	4
148074	Brake shoe steady pin spring	4	4	4	4	4	4
171944	Brake (front) support plate left assembly	..	1	..	1	..	1
176261	Brake (front) support plate right assembly	1	..	1	..	1	..
171943	Brake (front) support plate right assembly	..	1	..	1	..	1
176262	Brake (front) support plate left assembly	1	..	1	..	1	..
171948	Brake (rear) support plate left assembly	..	1	..	1	..	1
176259	Brake (rear) support plate left assembly	1	..	1	..	1	..
176260	Brake (rear) support plate right assembly	1	..	1	..	1	..
171947	Brake (rear) support plate right assembly	..	1	..	1	..	1
169171	Brake (front) universal joint cover	2	2	2	2	2	2
169192	Brake (front) universal joint cover cap	2	2	2	2	2	2
148073	Brake (front) universal joint cover cap spring	2	2	2	2	2	2
148075	Brake (front) universal joint cover cap spring retainer	2	2	2	2	2	2
163466	Lock	2	2	2	2	2	2
169311	Brake (front) universal joint pivot	2	2	2	2	2	2
139086	Brake (front) universal joint pivot pin	2	2	2	2	2	2
140075	Brake (front) universal joint pivot pin lock pin	2	2	2	2	2	2

BUMPER

packardinfo.com

170206	Bumper assembly—front	1	..	..	..	..	..
171594	Bumper assembly—front (used on 740)	..	1	..	..	..	..
181087	Bumper assembly—front	..	..	..	1	..	..
170207	Bumper assembly—front (used on 745) (specify color)	..	1	..	..	..	..
181086	Bumper assembly—front	..	..	1	..	..	..
191798	Bumper assembly—front	..	..	..	..	1	..
170208	Bumper assembly—rear	1	..	1	..	..	..
191797	Bumper assembly—rear	..	..	..	..	1	..
173370	Bumper assembly—rear (use with side wheel carrier)	1	..	1	..	..	..
191847	Bumper assembly—rear (use with side wheel carrier)	..	..	..	..	1	..
170209	Bumper assembly—rear (used on 740)	..	1	..	..	..	..
181093	Bumper assembly—rear (used with side wheel carrier)	..	..	..	1	..	..
191938	Bumper assembly—rear (used with side wheel carrier)	..	..	..	..	..	1
173369	Bumper assembly—rear (use with side wheel carrier) (used on 740)	..	1	..	..	..	..
181080	Bumper assembly—rear	..	..	..	1	..	..
191393	Bumper assembly—rear	..	..	..	..	..	1
170210	Bumper assembly—rear (used on 745) (specify color)	..	1	..	..	..	..
171815	Bumper assembly—rear (use with double or single wheel carrier) (used on 745) (specify color)	..	1	..	..	..	..
194071	Bumper and stabilizer assembly—front	..	..	..	..	..	1
141485	Bumper clamp plate—front	2	2	2	2	..	..
191794	Bumper clamp plate—front	..	..	..	..	2	..
191922	Bumper clamp plate—front	..	..	..	..	..	2
191791	Bumper clamp plate—front cover	..	..	..	..	2	2
191810	Bolt	..	..	..	..	4	4
5508	Lockwasher ($\frac{7}{16}$")	..	..	..	..	4	4
191437	Bumper clamp plate—rear	..	..	..	..	2	2
191438	Bumper clamp plate—rear cover	..	..	..	..	2	..
191439	Bumper clamp plate—rear cover	..	..	..	..	..	2
191174	Bolt	..	..	..	..	4	4

Printed in U. S. A.

Piece No.	Name	No. Required 726 733	740 745	826 833	840 845	901 902	903 904
5508	Lockwasher ($\frac{7}{16}$")	..	..	..	..	4	4
132706	Bumper clamp plate—rear (used on 726-733-740)	2	2	2	2	..	..
171768	Bumper clamp plate—rear (use with double or single wheel carrier) (used on 745) (specify color)	..	2	..	2	..	..
178767	Bumper clamp plate—rear (use with side wheel carrier) (used on 726-733-740)	2	2	2	..	..	..
7941	Screw($\frac{3}{8}$—24x1$\frac{1}{4}$"hex.hd.)(use with side wheel carrier)(used on 726-33-40)	4	4	4	..	..	..
7869	Screw ($\frac{3}{8}$—24 x 1$\frac{7}{8}$" hex. hd.) (use with side wheel carrier)	..	..	..	4	..	..
7819	Bumper clamp plate screw ($\frac{3}{8}$—24 x 1" hex. hd.)	..	..	8	4	..	..
7891	Bumper clamp plate screw ($\frac{3}{8}$—24 x 2$\frac{3}{8}$" hex. hd.)	..	..	..	4	..	..
5506	Lockwasher ($\frac{3}{8}$" std.)	..	..	8	8	..	..
158473	Bumper clamp plate and trunk rack support—left (used on 745) (specify color)	..	1	..	..	..	..
158474	Bumper clamp plate and trunk rack support—right (used on 745) (specify color)	..	1	..	..	..	..
7819	Screw ($\frac{3}{8}$—24 x 1" hex. hd.)	8	8	..	..	..	..
7835	Screw ($\frac{3}{8}$—24 x 1$\frac{9}{16}$" hex. hd.) (used on 745)	..	4	..	..	..	..
5506	Washer lock ($\frac{3}{8}$")	8	8	..	..	..	..
194549	Bumper front end stabilizer spring—inner	..	..	..	..	..	4
194548	Bumper front end stabilizer spring—outer	..	..	..	..	..	4
194585	Bumper front end stabilizer cover—lower assembly	..	..	..	..	..	2
194552	Bumper front end stabilizer cover—upper	..	..	..	..	..	2
194551	Bumper front end stabilizer bolt	..	..	..	..	..	2
5961	Lockwasher	..	..	..	..	..	2
178807	Bumper license plate support (used on 726-733-740)	2	2	2	2	2	2
178827	Bumper license plate support (used on 745) (specify color)	..	2	..	..	..	..
7824	Screw ($\frac{1}{4}$—28 x $\frac{5}{8}$" hex. hd.)	4	4	4	4	4	4
5502	Lockwasher ($\frac{1}{4}$")	4	4	4	4	4	4
7004	Nut ($\frac{1}{4}$—28 plain)	4	4	4	4	4	4
178808	Bumper license plate support bracket (used on 726-733-740)	2	2	2	2	2	2
178828	Bumper license plate support bracket (used on 745) (specify color)	..	2	..	..	..	..
7852	Screw ($\frac{1}{4}$—28 x $\frac{7}{8}$" hex. hd. mach.)	4	4	4	4	4	4
5502	Lockwasher ($\frac{1}{4}$")	4	4	4	4	4	4
7004	Nut ($\frac{1}{4}$"—28 plain)	4	4	4	4	4	4
195996	Bumper pebble deflector equipment (rear wheel carrier)	..	..	..	..	1	..
195997	Bumper pebble deflector equipment (side wheel carrier)	..	..	..	..	1	..
195998	Bumper pebble deflector equipment (rear wheel carrier)	..	..	..	..	..	1
195999	Bumper pebble deflector equipment (side wheel carrier)	..	..	..	..	..	1
186420	Bumper rear shield—right (use with fender guard)	1	..	1	..	..	..
186419	Bumper rear shield—left (use with fender guard)	1	..	1	..	..	..
191332	Bumper rear shield—left	..	..	1	..	..	..
191334	Bumper rear shield—left	..	..	..	1	..	..
191333	Bumper rear shield—right	..	..	1	..	..	..
191335	Bumper rear shield—right	..	..	..	1	..	..
138231	Bumper rear support plate (used on 745) (specify color)	..	2	..	..	..	..
180918	Bumper rear support plate	..	..	..	2	..	..
191431	Bumper rear support plate	..	..	..	..	2	2
158476	Bumper rear support plate to frame screw (used on 745)	..	2	..	..	..	..
181081	Bumper rear support plate liner	..	..	..	2	..	..

CLUTCH

143487	Clutch adjusting screw	..	3	..	3	..	3
143489	Clutch adjusting screw lockplate	..	3	..	3	..	3
143488	Clutch adjusting screw spring	..	3	..	3	..	3
186989	Clutch cover plate assembly	1	..	1	..	1	..
183007	Clutch cover plate assembly	..	1	..	1	..	1
148007	Clutch cover plate	1	..	1	..	1	..
143483	Clutch cover plate	..	1	..	1	..	1
145258	Screw	3	3	3	3	3	3
186855	Dowel screw	3	3	3	3	3	3
5506	Lockwasher ($\frac{3}{8}$")	6	6	6	6	6	6
194851	Clutch driven plate facing	2	..	2	..	2	..
194850	Clutch driven plate facing	..	4	..	4	..	4
144765	Rivet	18	24	18	24	18	24

Piece No.	Name	No. Required 726 733	740 745	826 833	840 845	901 902	903 904
147869	Clutch driving stud	6	..	6	..	..	..
142994	Clutch driving stud	..	6	..	..	..	..
184300	Clutch driving stud	..	..	..	6	..	..
194745	Clutch driving plate	..	1	..	1	..	1
179838	Clutch driven plate and hub assembly	1	..	1	..	..	..
194854	Clutch driven plate and hub assembly	..	..	..	..	1	..
179837	Clutch driven plate and hub assembly	..	1	..	1	..	..
194853	Clutch driven plate and hub assembly	..	..	..	..	..	1
144762	Clutch insulator mat	..	1	..	..	..	..
148019	Clutch insulator mat	1	..	..	..	..	..
143470	Clutch insulator mat to pressure plate drive screw	6	6	..	..	..	..
179168	Clutch pedal	1	1	..	..	..	..
181398	Clutch pedal	..	..	1	1	..	..
190887	Clutch pedal	..	..	..	..	1	1
138089	Clutch pedal bushing	1	1	1	1	..	..
169321	Clutch pedal pad	1	1	..	..	..	..
181401	Clutch pedal pad assembly	..	..	1	1	1	1
5394	Screw (3/8—24 x 1½" hex. hd.)	1	1	..	..	..	..
8043	Screw (5/16—24 x 1¼" hex. hd.)	..	..	1	1	1	1
5506	Lockwasher (3/8")	1	1	..	..	..	..
5504	Lockwasher (5/16")	..	..	1	1	1	1
7006	Nut (3/8"—24 plain)	1	1	..	..	..	..
7005	Nut (5/16"—24 plain)	..	..	1	1	1	1
177285	Clutch pedal pad assembly (extension type)	1	1	1	1	1	1
169182	Clutch pedal pad tread	1	1	1	1	1	1
138092	Clutch pedal retainer	1	1	1	1	..	..
7872	Screw (3/8—24 x 3/4" hex. hd.)	1	1	1	1	..	..
5506	Lockwasher (3/8")	1	1	1	1	..	..
111490	Clutch pedal retracting spring	1	1	1	1	..	..
191103	Clutch pedal retracting spring	..	..	..	..	1	1
158099	Clutch pedal shaft	1	1	1	1	..	..
190911	Clutch pedal shaft	..	..	..	..	1	1
7006	Clutch pedal shaft nut (3/8"—24)	..	..	..	..	1	1
5506	Lockwasher (3/8")	..	..	..	..	1	1
5914	Washer—plain	..	..	..	..	1	1
190912	Clutch pedal shaft spring washer	..	..	..	..	1	1
191048	Spring washer (15/16")	..	..	..	..	1	1
191047	Clutch pedal shaft sleeve	..	..	..	..	1	1
190927	Clutch pedal shaft spacer	..	..	..	..	3	3
190928	Clutch pedal shaft spacer (used on 904)	..	..	..	..	..	2
190961	Clutch pedal shaft oil restriction	..	..	..	..	1	1
190904	Clutch pedal shaft stop light switch housing	..	..	..	..	1	1
7812	Clamp screw (5/16—24 x 1 3/4" hex. hd.)	..	..	..	..	1	1
5504	Lockwasher (5/16")	..	..	..	..	1	1
7005	Nut (5/16"—24 plain)	..	..	..	..	1	1
158029	Clutch pedal shaft support	1	1	..	..	..	..
183073	Clutch pedal shaft support	..	..	1	1	..	..
190909	Clutch pedal shaft support	..	..	..	..	1	1
7815	Clutch pedal shaft support screw (5/16—24 x 1¼" hex. hd.)	4	4	4	4	..	..
5504	Lockwasher (5/16")	4	4	4	4	..	..
142008	Clutch pedal turnbuckle	1	1	1	1	..	..
141998	Clutch pedal turnbuckle bolt—left hand	1	1	1	1	..	..
141994	Clutch pedal turnbuckle bolt—right hand	1	1	1	1	..	..
142012	Clutch pedal turnbuckle bolt nut—left hand	1	1	1	1	..	..
7007	Clutch pedal turnbuckle bolt nut—right hand	1	1	1	1	..	..
162620	Clutch pedal turnbuckle bolt yoke end pin special	1	..	1	..	..	..
7526	Yoke end pin (3/8")	1	1	1	1	..	..
143134	Yoke end pin (special)	..	1	..	1	..	..
4290	Cotter pin (3/32 x 5/8")	2	2	2	2	..	..
190191	Washer—spring (3/8")	2	2	2	2	..	..
162954	Clutch plate hub bolt	3	..	3	..	3	..

packardinfo.com

Printed in U. S. A.

Piece No.	Name	No. Required 726 733	740 745	826 833	840 845	901 902	903 904
158459	Clutch plate hub bolt	..	3	..	3	..	3
179826	Clutch plate hub bolt spring	3	..	3	..	3	..
158460	Clutch plate hub bolt spring	..	3	..	3	..	3
162957	Clutch plate hub bolt nut	3	..	3	..	3	..
163374	Clutch plate hub bolt nut	..	3	..	3	..	3
4280	Cotter pin ($\frac{3}{16}$ x $\frac{1}{2}$")	..	..	..	..	3	3
158470	Clutch plate hub bolt washer	..	3	..	3	..	3
179843	Clutch plate hub friction plate	..	2	..	2	..	2
148017	Clutch pressure plate assembly (used prior to motor No. 303082)	1	..	..	..	..	..
143471	Clutch pressure plate assembly (used prior to motor No. 187041)	..	1	..	..	..	..
194746	Clutch pressure plate (after motor No. 303082 and 187041)	..	1	..	1	..	1
194755	Clutch pressure plate (after motor No. 303082 and 187041)	1	..	1	..	1	..
184346	Clutch pressure spring	12	12	12	12	12	12
148021	Cup (prior to motor No. 303082 for 726-733 and 187041 for 745)	12	12	..	..	..	..
183012	Clutch pressure spring insulator button (after motor No. 303082 and 187041)	12	12	12	12	12	12
183011	Clutch pressure spring locator (after motor No. 303082 and 187041)	12	12	12	12	12	12
148022	Clutch release lever (prior to motor No. 328505)	6	..	6	..	..	..
186944	Clutch release lever (after motor No. 328504)	..	..	6	..	6	..
179575	Clutch release lever	..	6	..	6	..	6
143476	Bolt	6	6	6	6	6	6
143478	Locknut	6	6	6	6	6	6
148024	Locking washer	6	6	6	6	6	6
143477	Washer	..	6	..	..	..	..
148026	Clutch release lever reaction spring (prior to motor No. 328505)	6	6	6	6	..	..
186945	Clutch release lever reaction spring (after motor No. 328504)	..	..	6	..	6	6
148025	Clutch release lever spring	6	6	6	6	6	6
143479	Clutch release lever spring	..	6	..	..	..	..
144731	Washer	6	6	6	6	6	6
143480	Clutch separator spring	..	6	..	6	..	6
173541	Clutch separator spring rivet	..	3	..	3	..	3
176890	Clutch shaft (prior to trans. No. 283200 for 726-733 and 180700 for 740-745)	1	1	..	..	..	..
177691	Clutch shaft (after trans. No. 283199 for 726-733 and 180699 for 740-745)	1	1	..	..	..	..
179973	Clutch shaft	..	..	1	1	..	..
195883	Clutch shaft assembly	..	..	..	..	1	1
107389	Clutch shaft bearing—front	1	1	1	1	1	1
156461	Clutch shaft bearing—front—retainer	1	1	1	1	1	1
143450	Gasket	1	1	1	1	1	1
8212	Screw (No. 10—32 x $\frac{7}{16}$")	6	6	6	6	6	6
5491	Lockwasher ($\frac{3}{16}$")	6	6	6	6	6	6
111104	Clutch shaft bearing rear assembly	1	1	1	1	..	..
191090	Clutch shaft bearing rear assembly	..	..	..	..	1	1
176891	Clutch shaft bearing rear housing	1	1	1	1	1	1
176892	Clutch shaft bearing rear housing cover	1	1	1	1	..	..
194288	Clutch shaft bearing rear housing cover and oil extension assembly	..	..	..	..	1	1
7861	Screw ($\frac{5}{16}$"—24 x 1" hex. hd.)	4	4	4	4	..	..
5504	Lockwasher ($\frac{5}{16}$")	4	4	4	4	..	..
6115	Stud ($\frac{5}{16}$") (use with aluminum trans. case)	..	..	..	..	4	4
7861	Screw ($\frac{5}{16}$"—24 x 1" hex. hd.) (use with iron trans. case)	..	..	..	..	4	4
5504	Lockwasher ($\frac{5}{16}$")	..	..	..	..	4	4
7005	Nut ($\frac{5}{16}$"—24) (use with aluminum trans. case)	..	..	..	..	4	4
176893	Clutch shaft bearing rear housing gasket	1	1	1	1	..	..
190705	Clutch shaft bearing rear housing cover gasket	..	..	..	..	1	1
176885	Clutch shaft bearing rear lock ring	1	1	1	1	..	..
176897	Clutch shaft bearing rear oil thrower (prior to trans. No. 283200 for 726-733 and 180700 for 740-745)	1	1	..	..	..	..
177682	Clutch shaft bearing rear oil thrower (after trans. No. 283199 for 726-733 and 180699 for 740-745)	1	1	1	1	..	..
191094	Clutch shaft bearing rear oil thrower (.2285" thick)	..	..	..	..	x	x
191095	Clutch shaft bearing rear oil thrower (.2305" thick)	..	..	..	..	x	x
191096	Clutch shaft bearing rear oil thrower (.2325" thick)	..	..	..	..	x	x
191097	Clutch shaft bearing rear oil thrower (.2345" thick)	..	..	..	..	x	x
191098	Clutch shaft bearing rear oil thrower (.2365" thick)	..	..	..	..	x	x
191099	Clutch shaft bearing rear oil thrower (.2385" thick)	..	..	..	..	x	x

packardinfo.com

Piece No.	Name	No. Required 726 733	740 745	826 833	840 845	901 902	903 904
191091	Clutch shaft bearing retainer nut (right hand thread)	-	-	-	-	1	1
195879	Clutch shaft bearing retaining nut (left hand thread)	-	-	-	-	1	1
191092	Clutch shaft bearing retaining nut lockwasher	-	-	-	-	1	1
184990	Clutch shifter lever	1	-	1	-	-	-
184989	Clutch shifter lever	-	1	-	1	-	-
186769	Clutch shifter lever	-	-	-	-	1	1
7821	Screw 3/8-24 x 2-1/8" hex. hd.	1	1	1	1	-	-
5506	Lockwasher 3/8"	1	1	1	1	-	-
7006	Nut 3/8-24 plain	1	1	1	1	-	-
4454	Key-Woodruff "A"	1	1	1	1	-	-
190737	Clutch shifter lever socket	-	-	-	-	1	1
8116	Stud 3/8" (use with aluminum trans. case)	-	-	-	-	2	2
6106	Stud 3/8" (use with iron trans. case)	-	-	-	-	2	2
7006	Nut 3/8-24	-	-	-	-	2	2
5506	Lockwasher 3/8"	-	-	-	-	2	2
3877	Washer 3/8"	-	-	-	-	2	2
190244	Clutch shifter lever spring	-	-	-	-	1	1
190245	Clutch shifter lever spring retainer	-	-	-	-	1	1
4310	Cotter pin 1/8 x 1-1/2"	-	-	-	-	1	1
142000	Clutch shifter shaft	1	1	1	1	-	-
138089	Clutch shifter shaft bearing bushing-long	1	1	1	1	-	-
136996	Clutch shifter shaft bearing bushing-short	1	1	1	1	-	-
158026	Clutch shifter shaft bearing dowel	1	1	1	1	-	-
5504	Lockwasher 5/16"	1	1	1	1	-	-
142010	Clutch shifter shaft bearing sleeve assembly	1	1	1	1	-	-
215038	Clutch shifter thrust bearing	1	1	1	1	1	1
176917	Clutch shifter thrust bearing sleeve assembly	1	-	1	-	-	-
190431	Clutch shifter thrust bearing sleeve assembly	-	-	-	-	1	-
176918	Clutch shifter thrust bearing sleeve assembly	-	1	-	1	-	-
191176	Clutch shifter thrust bearing sleeve assembly	-	-	-	-	-	1
142005	Clutch shifter thrust bearing sleeve collar filler	1	1	1	1	1	1
176894	Clutch shifter thrust bearing sleeve collar oil extension	1	1	1	1	1	1
144891	Clutch shifter thrust bearing sleeve collar spring	2	2	2	2	2	2
5397	Rivet 1/8 x 5/8" c'sunk hd.	2	2	2	2	2	2

CLUTCH VACUUM CONTROL

207235	Clutch control valve assembly (repair parts not furnished return defective assembly to factory)	-	-	-	-	1	1
7810	Bolt short 5/16-24 x 1-1/4" hex. hd.	-	-	-	-	1	1
5753	Bolt long 5/16-24 x 1-7/8" hex. hd.	-	-	-	-	1	1
5504	Lockwasher 5/16"	-	-	-	-	2	2
7005	Nut 5/16-24	-	-	-	-	2	2
202430	Clutch control valve bracket	-	-	-	-	1	1
133151	Clutch control valve bracket cap	-	-	-	-	2	2
7724	Screw 1/4-20 x 1" fill. hd.	-	-	-	-	4	4
3907	Washer 1/4"	-	-	-	-	4	4
5502	Lockwasher 1/4" (160-L steel)	-	-	-	-	4	4
202516	Clutch control valve to clutch vacuum cylinder tube front assembly	-	-	-	-	1	1
6259	Clutch control valve to clutch vacuum cylinder tube union	-	-	-	-	1	1
202901	Clutch control valve to clutch vacuum cylinder tube adapter screw.	-	-	-	-	1	1
202310	Clutch control valve to clutch vacuum cylinder tube adapter screw gasket	-	-	-	-	2	2
202510	Clutch control valve to clutch vacuum cylinder tube rear assembly (used on 901 only)	-	-	-	-	1	-
202536	Clutch control valve to clutch vacuum cylinder tube rear assembly (used on 902-903 only)	-	-	-	-	1	1
202537	Clutch control valve to clutch vacuum cylinder tube rear assembly (used on 904 only)	-	-	-	-	-	1
35579	Clutch control valve to clutch vacuum cylinder tube clip (used only on 904)	-	-	-	-	-	1
7710	Screw No. 10-32 x 5/8" fill. hd. (used on 904 only)	-	-	-	-	-	1
3866	Washer 3/16" (used on 904 only)	-	-	-	-	-	1
5500	Lockwasher No. 10 (used on 904 only)	-	-	-	-	-	1
7003	Nut No. 10-32 (used on 904 only)	-	-	-	-	-	1
8263	Clutch control valve to clutch vacuum cylinder tube rear nut	-	-	-	-	1	1
202201	Clutch control valve to clutch vacuum cylinder tube hose	-	-	-	-	1	1
202202	Clutch control valve to clutch vacuum cylinder tube hose clamp	-	-	-	-	2	2

Piece No.	Name	No. Required 726 733	740 745	826 833	840 845	901 902	903 904
202532	Clutch control valve to clutch vacuum cylinder tube hose clip	-	-	-	-	1	1
7710	Screw No. 10-32 x 5/8" fill. hd.)	-	-	-	-	1	1
3866	Washer 3/16"	-	-	-	-	1	1
5500	Lockwasher No. 10	-	-	-	-	1	1
7003	Nut No. 10-32	-	-	-	-	1	1
202520	Clutch control valve to clutch vacuum cylinder vacuum release tube assembly (used on 901 only)	-	-	-	-	1	-
202523	Clutch control valve to clutch vacuum cylinder vacuum release tube assembly (used on 902-903 only)	-	-	-	-	1	1
202524	Clutch control valve to clutch vacuum cylinder vacuum release tube assembly (used on 904 only)	-	-	-	-	-	1
5866	Union nut 5/16" flared tube	-	-	-	-	2	2
5444	Union connection 5/16" flared tube (not used with bleeder valve)	-	-	-	-	1	1
202356	Clutch control valve to clutch vacuum release tube clip	-	-	-	-	1	1
7824	Screw 1/4-28 x 5/8" hex. hd.	-	-	-	-	1	1
5502	Lockwasher 1/4"	-	-	-	-	1	1
7004	Nut 1/4-28	-	-	-	-	1	1
147188	Clutch control valve to clutch vacuum cylinder vacuum release tube elbow 5/16" flared tube	-	-	-	-	1	-
167638	Clutch control valve to clutch vacuum cylinder vacuum release tube elbow 5/16" flared tube	-	-	-	-	-	1
203841	Clutch control valve to clutch vacuum cylinder vacuum release tube tee (used with bleeder valve)	-	-	-	-	1	1
202313	Clutch control valve connecting rod assembly	-	-	-	-	1	-
202557	Clutch control valve connecting rod assembly	-	-	-	-	-	1
114775	Clutch control valve connecting rod ball joint	-	-	-	-	1	-
143143	Clutch control valve connecting rod ball joint	-	-	-	-	-	1
5500	Lockwasher No. 10	-	-	-	-	1	1
7003	Nut No. 10-32	-	-	-	-	2	2
4280	Cotter pin 1/16 x 1/2"	-	-	-	-	1	1
202290	Clutch control valve connecting rod end pin	-	-	-	-	1	1
202319	Clutch control valve connecting rod end pin spring washer	-	-	-	-	1	1
202317	Clutch control valve flange assembly	-	-	-	-	1	1
6154	Screw No. 10-24 x 1-3/16" hex. hd.	-	-	-	-	3	3
5500	Lockwasher No. 10	-	-	-	-	3	3
202318	Clutch control valve flange gasket	-	-	-	-	1	1
202201	Clutch control valve to motor intake manifold hose	-	-	-	-	1	1
202202	Clutch control valve to motor intake manifold hose clamp	-	-	-	-	2	2
202479	Clutch control valve to motor intake manifold tube assembly	-	-	-	-	1	-
202534	Clutch control valve to motor intake manifold tube assembly	-	-	-	-	-	1
6139	Union connection	-	-	-	-	1	-
6140	Union 1/2" flared tube	-	-	-	-	-	1
5465	Union nut 1/2" flared tube	-	-	-	-	1	1
202315	Clutch control valve to motor intake manifold tube clip	-	-	-	-	1	1
6145	Stud special 1/4-28 x 1-1/2"	-	-	-	-	3	3
5502	Lockwasher 1/4"	-	-	-	-	3	3
7004	Nut 1/4-28	-	-	-	-	3	3
202367	Clutch control valve to motor intake manifold tube flange	-	-	-	-	1	1
202379	Clutch control valve to motor intake manifold tube flange gasket	-	-	-	-	1	1
202261	Clutch vacuum cylinder assembly (repair parts not furnished--return defective assembly to factory)	-	-	-	-	1	1
203850	Clutch vacuum cylinder to bleeder valve tube assembly (used on 901 only)	-	-	-	-	1	-
203852	Clutch vacuum cylinder to bleeder valve tube assembly (used on 902-903 only)	-	-		-	1	1
203854	Clutch vacuum cylinder to bleeder valve tube assembly (used on 904 only)	-	-	-	-	-	1
132447	Clutch vacuum cylinder to bleeder valve tube union nut	-	-	-	-	2	2
202473	Clutch vacuum cylinder bracket (used on 901 only)	-	-	-	-	1	-
202454	Clutch vacuum cylinder bracket (used on 902-903-904 only)	-	-	-	-	1	1
202452	Clutch vacuum cylinder bracket hook screw	-	-	-	-	2	2
7526	Yoke end pin 3/8"	-	-	-	-	1	1
190191	Yoke end pin spring washer	-	-	-	-	1	1
4280	Cotter pin 1/16 X 1/2"	-	-	-	-	1	1
5504	Lockwasher 5/16"	-	-	-	-	2	2
7005	Nut 5/16-24	-	-	-	-	2	2

Piece No.	Name	No. Required 726 733	740 745	826 833	840 845	901 902	903 904
191100	Clutch shaft bearing rear oil thrower (.2405" thick)					x	x
191093	Clutch shaft bearing rear oil thrower (.2425" thick)					x	x
191501	Clutch shaft bearing rear oil thrower (.2445" thick)					x	x
191502	Clutch shaft bearing rear oil thrower (.2465" thick)					x	x
191503	Clutch shaft bearing rear oil thrower (.2485" thick)					x	x
191504	Clutch shaft bearing rear oil thrower (.2505" thick)					x	x
191506	Clutch shaft bearing rear oil thrower (.2525" thick)					x	x
191509	Clutch shaft bearing rear oil thrower (.2545" thick)					x	x
191510	Clutch shaft bearing rear oil thrower (.2565" thick)					x	x
176886	Clutch shaft bearing rear spacer	1	1	1	1	..	..
191091	Clutch shaft bearing retaining nut (right hand thread)					1	1
195879	Clutch shaft bearing retaining nut (left hand thread)					1	1
191092	Clutch shaft bearing retaining nut lockwasher					1	1
184990	Clutch shifter lever	1	..	1	..	..	..
184989	Clutch shifter lever	..	1	..	1	..	..
186769	Clutch shifter lever					1	1
7821	Screw (3/8—24 x 2 1/8" hex. hd.)	1	1	1	1	..	..
5506	Lockwasher (3/8")	1	1	1	1	..	..
7006	Nut (3/8"—24 plain)	1	1	1	1	..	..
4554	Key—Woodruff "A"	1	1	1	1	..	..
190737	Clutch shifter lever socket					1	1
6116	Stud (3/8") (use with aluminum trans. case)					2	2
6106	Stud (3/8") (use with iron trans. case)					2	2
7006	Nut (3/8"—24)					2	2
5506	Lockwasher (3/8")					2	2
190244	Clutch shifter lever spring					1	1
190245	Clutch shifter lever spring retainer					1	1
4310	Cotter pin (1/8 x 1 1/2")					1	1
142000	Clutch shifter shaft	1	1	1	1	..	..
138089	Clutch shifter shaft bearing bushing—long	1	1	1	1	..	..
136996	Clutch shifter shaft bearing bushing—short	1	1	1	1	..	..
158026	Clutch shifter shaft bearing dowel	1	1	1	1	..	..
5504	Lockwasher (5/16")	1	1	1	1	..	..
142010	Clutch shifter shaft bearing sleeve assembly	1	1	1	1	..	..
138119	Clutch shifter thrust bearing	1	1	1	1	1	1
176917	Clutch shifter thrust bearing sleeve assembly	1	..	1	..	..	..
190431	Clutch shifter thrust bearing sleeve assembly	..	..	..	..	1	..
176918	Clutch shifter thrust bearing sleeve assembly	..	1	..	1	..	..
191176	Clutch shifter thrust bearing sleeve assembly	..	..	..	..	..	1
142005	Clutch shifter thrust bearing sleeve collar filler	1	1	1	1	1	1
176894	Clutch shifter thrust bearing sleeve collar oil extension	1	1	1	1	1	1
144891	Clutch shifter thrust bearing sleeve collar spring	2	2	2	2	2	2
5397	Rivet (1/8 x 5/8" c'sunk hd.)	2	2	2	2	2	2

DIFFERENTIAL

138120	Differential bearing adjusting nut	2	..	2	..	2	..
138121	Differential bearing adjusting nut	..	2	..	2	..	2
140067	Differential bearing adj. nut lock	2	2	2	2	2	2
4332	Cotter (3/16 x 1 1/4")	2	2	2	2	2	2
139768	Differential bearing assembly (Timken No. 377) (prior to rear axle No. 346065)	2	..	2	..	2	..
197985	Differential bearing assembly (Timken No. 3767) (after rear axle No. 346064)	..	..	..	..	2	..
139587	Differential bearing assembly (Timken No. 456) (prior to frame No. 186080 for 740 and 185623 for 745)	..	2	..	..	..	..
180750	Differential bearing assembly (Timken No. 469 special) (after frame No. 186079 for 740 and 185622 for 745)	..	2	..	2	..	2
173373	Differential carrier assembly (4.38 to 1 ratio)	1	..	1	..	..	..
190525	Differential carrier assembly (4.41 to 1 ratio) (used on 901)	..	..	..	..	1	..
194740	Differential carrier assembly (4.41 to 1 ratio) (used on 902)	..	..	..	..	1	..
173374	Differential carrier assembly (4.69 to 1 ratio)	1	..	1	..	..	..
191641	Differential carrier assembly (4.69 to 1 ratio) (used on 901)	..	..	..	..	1	..
194741	Differential carrier assembly (4.69 to 1 ratio) (used on 902)	..	..	..	..	1	..
173375	Differential carrier assembly (4.38 to 1 ratio)	..	1	..	1	..	..
190528	Differential carrier assembly (4.41 to 1 ratio)	..	..	..	..	..	1

packardinfo.com

Printed in U. S. A.

Piece No.	Name	No. Required 726 733	740 745	826 833	840 845	901 902	903 904
173376	Differential carrier assembly (4.07 to 1 ratio)		1		1		
190529	Differential carrier assembly (4.06 to 1 ratio)						1
175748	Differential carrier assembly (5.08 to 1 ratio)	1		1			
190530	Differential carrier assembly (5.07 to 1 ratio) (used on 901)					1	
194742	Differential carrier assembly (5.07 to 1 ratio) (used on 902)					1	
184504	Differential carrier assembly (5.08 to 1 ratio)		1		1		
190527	Differential carrier assembly (5.07 to 1 ratio)						1
173540	Differential carrier assembly (4.69 to 1 ratio)		1		1		
191642	Differential carrier assembly (4.69 to 1 ratio)						1
175847	Differential carrier and cap assembly	1		1			
194369	Differential carrier and cap assembly					1	
175846	Differential carrier and cap assembly		1		1		
194459	Differential carrier and cap assembly						1
138128	Differential carrier cap	2		2			
191551	Differential carrier cap					2	
138129	Differential carrier cap		2		2		
191552	Differential carrier cap						2
138594	Stud ($\frac{7}{16}$—20 x 2 $\frac{23}{32}$")	4		4			
191553	Stud					4	
138595	Stud ($\frac{1}{2}$—20 x 3 $\frac{5}{16}$")		4		4		
194184	Stud						4

packardinfo.com

packardinfo.com

Piece No.	Name	No. Required 726 733	740 745	826 833	840 845	901 902	903 904
7107	Nut ($\frac{7}{16}$"—20 castle)	4	..	4	..	4	..
7108	Nut ($\frac{1}{2}$"—20 castle)	..	4	..	4	..	4
4291	Cotter pin ($\frac{3}{32}$ x $\frac{3}{4}$")	..	..	..	..	4	4
5163	Washer ($\frac{29}{64}$ x $\frac{7}{8}$ x $\frac{5}{32}$" plain)	4	..	4	..	4	..
138634	Washer ($\frac{33}{64}$ x $\frac{15}{16}$ x $\frac{5}{32}$")	..	4	..	4	..	4
191554	Differential carrier spacer nut	..	..	..	..	4	..
191555	Differential carrier spacer nut	..	..	..	..	..	4
120813	Differential carrier cap stud lock wire 8" long	4	4	4	4	..	..
140431	Differential carrier to rear axle case gasket	1	..	1	..	1	..
141345	Differential carrier to rear axle case gasket	..	1	..	1	..	1
7835	Differential carrier to rear axle case screw ($\frac{3}{8}$—24 x $1\frac{9}{16}$" hex. hd.)	6	..	6	..	6	..
7819	Screw ($\frac{3}{8}$—24 x 1" hex. hd.)	4	..	4	..	4	..
7951	Differential carrier to rear axle case screw ($\frac{7}{16}$—20 x $1\frac{1}{4}$" hex. hd.)	..	10	..	10	..	10
5998	Stud ($\frac{7}{16}$—20 x $1\frac{5}{8}$")	..	..	..	..	..	10
5993	Stud ($\frac{3}{8}$ x 24 x $2\frac{1}{16}$")	..	..	..	..	6	..
5994	Stud ($\frac{3}{8}$ x 24 x $1\frac{9}{16}$")	..	..	..	..	4	..
7006	Nut ($\frac{3}{8}$"—24)	..	..	..	..	10	..
7007	Nut ($\frac{7}{16}$"—20)	..	..	..	..	..	10
5506	Lockwasher ($\frac{3}{8}$")	10	..	10	..	10	..
5508	Lockwasher ($\frac{7}{16}$")	..	10	..	10	..	10
143457	Differential case assembly	1	..	1	..	1	..
143458	Differential case assembly (prior to frame No. 186080 for 740, 185623 for 745)	..	1	..	..	..	..
180751	Differential case assembly (after frame No. 186079 for 740 and 185622 for 745)	..	1	..	1	..	1
118196	Differential case stud ($\frac{3}{8}$—24 x 2")	8	8	8	8	8	8
7106	Nut ($\frac{3}{8}$"—24 castle)	8	8	8	8	8	8
120813	Differential case stud lockwire 6" long	4	4	4	4	4	4
141902	Differential driving gear and pinion assembly (4.38 to 1 ratio) (57-13 teeth)	1	..	1	..	..	..
141902	Differential driving gear and pinion assembly (4.41 to 1 ratio) (75-17 teeth)	..	..	..	..	1	..
141461	Differential driving gear and pinion assembly (4.69 to 1 ratio) (61-13 teeth)	1	..	1	..	..	..
141461	Differential driving gear and pinion assembly (4.69 to 1 ratio) (75-16 teeth)	..	..	..	..	1	..
141459	Differential driving gear and pinion assembly (4.07 to 1 ratio) (57-14 teeth)	..	1	..	1	..	..
141459	Differential driving gear and pinion assembly (4.06 to 1 ratio) (69-17 teeth)	..	..	..	..	..	1
141903	Differential driving gear and pinion assembly (4.38 to 1 ratio) (57-13 teeth)	..	1	..	1	..	..
141903	Differential driving gear and pinion assembly (4.41 to 1 ratio) (75-17 teeth)	..	..	..	..	..	1
141460	Differential driving gear and pinion assembly (4.69 to 1 ratio) (61-13 teeth)	..	1	..	1	..	..
141460	Differential driving gear and pinion assembly (4.69 to 1 ratio) (75-16 teeth)	..	..	..	..	..	1
141462	Differential driving gear and pinion assembly (5.08 to 1 ratio) (61-12 teeth)	1	..	1	..	..	..
141462	Differential driving gear and pinion assembly (5.07 to 1 ratio) (71-14 teeth)	..	..	..	..	1	..
184410	Differential driving gear and pinion assembly (5.08 to 1 ratio) (61-12 teeth)	..	1	..	1	..	..
184410	Differential driving gear and pinion assembly (5.07 to 1 ratio) (71-14 teeth)	..	..	..	..	..	1
194182	Differential driving gear screw	16	16	16	16	16	16
120813	Lockwire 8" long	8	8	8	8	8	8
138920	Differential driving pinion bearing front	1	..	1	..	1	..
138908	Differential driving pinion bearing front	..	1	..	1	..	1
138584	Differential driving pinion bearing (front) dust washer and retainer assembly	1	1	1	1	1	1
111538	Differential driving pinion bearing (front) dust washer	1	1	1	1	1	1
138152	Differential driving pinion bearing (front) nut	1	..	1	..	1	..
138153	Differential driving pinion bearing (front) nut	..	1	..	1	..	1
173333	Differential driving pinion bearing (front) lock	1	1	1	1	1	1
138147	Differential driving pinion bearing (front) oil impeller assembly	1	1	1	1	1	1
141358	Differential driving pinion bearing—rear	1	1	1	1	1	1
173326	Differential driving pinion bearing sleeve—front	1	..	1	..	..	..
190536	Differential driving pinion bearing sleeve—front	..	..	..	..	1	..
173327	Differential driving pinion bearing sleeve—front	..	1	..	1	..	..
190507	Differential driving pinion bearing sleeve—front	..	..	..	..	..	1
7822	Screw ($\frac{3}{8}$—24 x $1\frac{1}{2}$" hex. hd.)	7	7	7	7	8	8
5506	Lockwasher ($\frac{3}{8}$")	7	7	7	7	8	8
190537	Differential driving pinion bearing front sleeve shim—thick	..	..	..	..	x	..
190516	Differential driving pinion bearing front sleeve shim—thick	..	..	..	..	..	x
190538	Differential driving pinion bearing front sleeve shim—thin	..	..	..	..	x	..
190517	Differential driving pinion bearing front sleeve shim—thin	..	..	..	..	..	x
190539	Differential driving pinion bearing front sleeve shim—medium	..	..	..	..	x	..
190518	Differential driving pinion bearing front sleeve shim—medium	..	..	..	..	..	x
173329	Differential driving pinion bearing front sleeve shim—thick	x	..	x	..	..	..

packardmotor.com

Piece No.	Name	No. Required 726 733	740 745	826 833	840 845	901 902	903 904
173331	Differential driving pinion bearing front sleeve shim thick	..	x	..	x	..	..
184598	Differential driving pinion bearing front sleeve shim medium	..	..	x	..	..	..
173328	Differential driving pinion bearing front sleeve shim—thin	x	..	x	..	..	..
173330	Differential driving pinion bearing front sleeve shim—thin	..	x	..	x	..	..
184597	Differential driving pinion bearing front sleeve shim—medium	..	..	..	x	..	..
138154	Differential driving pinion flange (used on 901-903-904)	1	1	1	1	1	1
190520	Differential driving pinion flange (used on 902)	..	..	..	..	1	..
127273	Nut (¾"—16 castle)	1	1	1	1	1	1
4320	Cotter ($\frac{5}{32}$ x 1⅛")	1	1	1	1	1	1
138888	Differential driving pinion flange spacer	1	..	1	..	1	..
138155	Differential driving pinion flange spacer	..	1	..	1	..	1
140079	Differential driving pinion flange washer	1	1	1	1	1	1
140421	Differential driving pinion oil thrower	1	..	1	..	1	..
140422	Differential driving pinion oil thrower	..	1	..	1	..	1
124616	Differential gear	2	2	2	2	..	..
186501	Differential gear	..	..	..	..	2	2
143459	Differential gear thrust washer	2	2	2	2	2	2
4724	Dowel pin ($\frac{3}{16}$ x ½")	4	4	4	4	4	4
143460	Shim (.005" thick)	x	x	x	x	x	x
143461	Shim (.006" thick)	x	x	x	x	x	x
143462	Shim (.007" thick)	x	x	x	x	x	x
143463	Shim (.017" thick)	x	x	x	x	x	x
124617	Differential pinion	4	4	4	4	4	4
124618	Differential pinion spider	1	1	1	1	1	1

DISTRIBUTOR (North East No. 10868)

The following are listed with the Manufacturer's piece numbers and are to be ordered direct from the North East Service Inc., Rochester, New York, or nearest Service Station.

NE20989	Distributor cap cover	1	1	..	..	..	..
NE20153	Distributor cap	1	1	..	..	..	..
NE21039	Insulated terminal nut—high tension	1	1	..	..	..	..
NE10142	Terminal—high tension	1	1	..	..	..	..
NE10143	Eyelet	1	1	..	..	..	..
NE20366	Rubber bushing	1	1	..	..	..	..
NE674	Terminal nut	1	1	..	..	..	..
NE20869	Washer	1	1	..	..	..	..
NE497	Binding post nut	1	1	..	..	..	..
NE2155	Lockwasher	1	1	..	..	..	..
NE20491	Distributor rotor	1	1	..	..	..	..
NE22301	Breaker box assembly	1	1	..	..	..	..
NE20387	Breaker plate complete	1	1	..	..	..	..
NE19796	Breaker arm—with spring and bushing	2	2	..	..	..	..
NE20141	Locking clip	2	2	..	..	..	..
NE22801	Spring brake	1	1	..	..	..	..
NE20423	Insulating washer	2	2	..	..	..	..
NE20398	Connector	1	1	..	..	..	..
NE19959	Contact stud	2	2	..	..	..	..
NE10077	Lock nut	2	2	..	..	..	..
NE19833	Insulating bushing	1	1	..	..	..	..
NE630	Screw breaker plate to bracket	3	3	..	..	..	..
NE2155	Lockwasher	3	3	..	..	..	..
NE22901	Condenser	1	1	..	..	..	..
NE10160	Terminal screw	1	1	..	..	..	..
NE621	Lockwasher	1	1	..	..	..	..
NE20483	Binding post—low tension	1	1	..	..	..	..
NE20484	Insulating bushing	1	1	..	..	..	..
NE497	Binding post nut	1	1	..	..	..	..
NE22302	Housing and advance assembly	1	1	..	..	..	..
NE20400	Housing only	1	1	..	..	..	..

packardinfo.com

Printed in U. S. A.

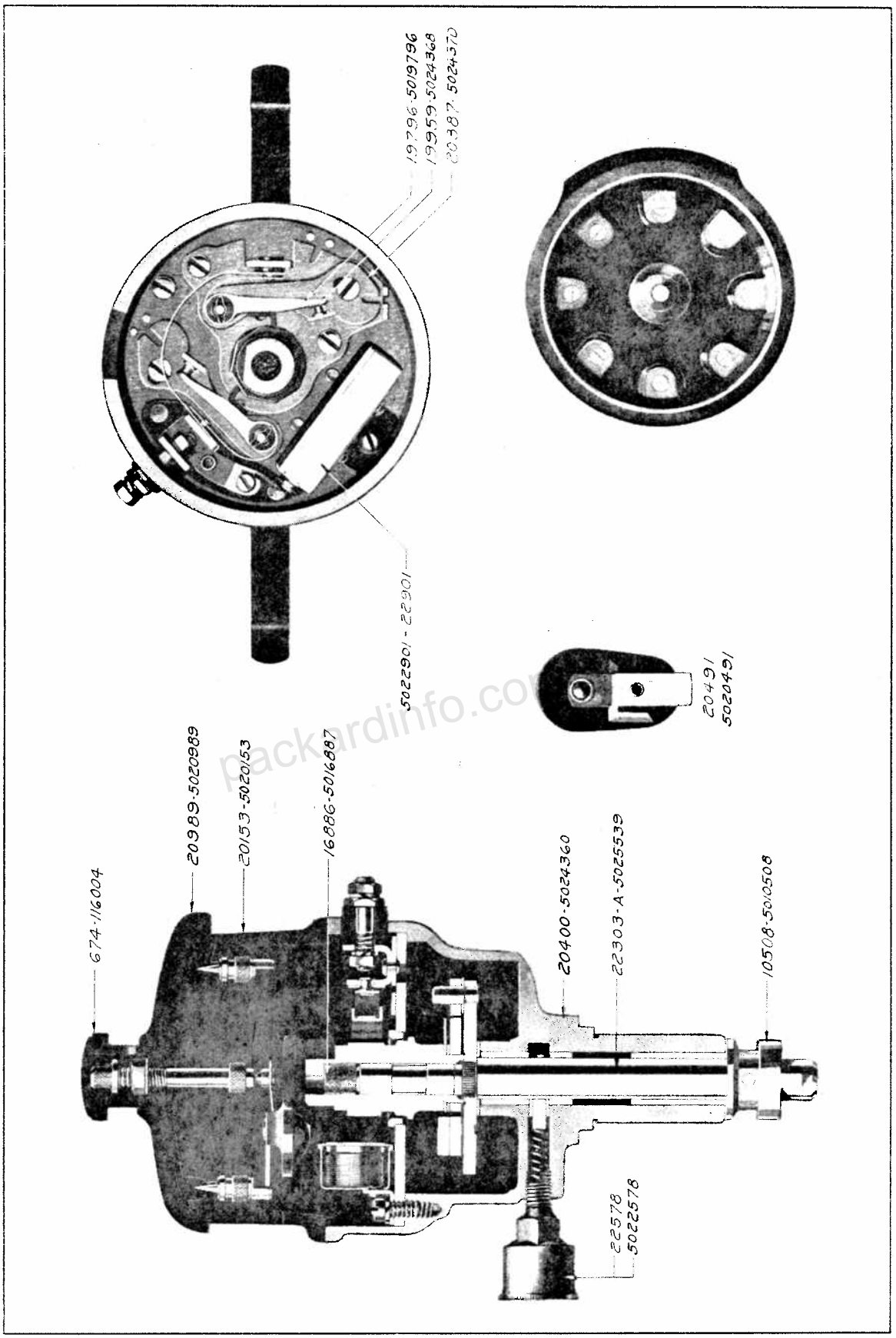

packardinfo.com

726-733-740-745
826-833-840-845

Piece No.	Name	No. Required 726 733	740 745	826 833	840 845	901 902	903 904
NE20485	Clasp	2	2	..	..	..	..
NE20575	Rivet	2	2	..	..	..	..
NE22303A	Shaft, advance and cam assembly	1	1	..	..	..	..
NE20348	Thrust washer	1	1	..	..	..	..
NE16887	Oil wick in breaker cam	2	2	..	..	..	..
NE15168	Oiler	1	1	..	..	..	..
NE16886	Oil wick	1	1	..	..	..	..
NE19822	Oil wick spring	1	1	..	..	..	..
NE10508	Coupling	1	1	..	..	..	..
NE11660	Pin coupling to shaft	1	1	..	..	..	..
NE22578	Grease cup	1	1	..	..	..	..

DISTRIBUTOR (North East No. 10896)

The following are listed with the Manufacturer's piece numbers and are to be ordered direct from the North East Service Inc., Rochester, New York, or nearest Service Station.

NE5010896	Timer distributor	..	..	1	1	..	..
NE5020989	Distributor cap cover	..	..	1	1	..	..
NE5020153	Distributor cap	..	..	1	1	..	..
NE5021039	Insulated terminal nut—high tension	..	..	1	1	..	..
NE064994	Terminal—high tension	..	..	1	1	..	..
NE064995	Eyelet	..	..	1	1	..	..
NE064993	Rubber bushing	..	..	1	1	..	..
NE116004	Terminal nut	..	..	1	1	..	..
NE5002259	Washer	..	..	..	..	..	..
NE115295	Binding post nut	..	..	1	1	..	..
NE106497	Lockwasher	..	..	1	1	..	..
NE5020491	Distributor rotor	..	..	1	1	..	..
NE5024370	Breaker plate assembly	..	..	1	1	..	..
NE5019796	Breaker arm and spring	..	..	2	2	..	..
NE5020141	Locking clip	..	..	2	2	..	..
NE5020423	Insulating washer	..	..	2	2	..	..
NE5020398	Connector	..	..	1	1	..	..
NE5019833	Insulating bushing	..	..	1	1	..	..
NE5024368	Adjustable contact plate—with contact	..	..	1	1	..	..
NE5023583	Screw—contact plate to breaker plate	..	..	2	2	..	..
NE132099	Screw—synchronizing plate to breaker plate	..	..	2	2	..	..
NE5008462	Washer	..	..	2	2	..	..
NE106497	Lockwasher	..	..	2	2	..	..
NE132109	Screw—breaker plate and condenser to housing	..	..	2	2	..	..
NE106497	Lockwasher	..	..	2	2	..	..
NE5022901	Condenser	..	..	1	1	..	..
NE132461	Terminal screw	..	..	1	1	..	..
NE106495	Lockwasher	..	..	1	1	..	..
NE5020483	Binding post—low tension	..	..	1	1	..	..
NE5020484	Insulating bushing	..	..	1	1	..	..
NE115295	Binding post nut	..	..	1	1	..	..
NE106497	Lockwasher	..	..	1	1	..	..
NE5024360	Lower housing assembly	..	..	1	1	..	..
NE5020485	Clasp	..	..	2	2	..	..
NE5024178	Rivet	..	..	2	2	..	..
NE5025539	Advance assembly	..	..	1	1	..	..
NE5020348	Thrust washer	..	..	1	1	..	..
NE5016887	Oil wick—in breaker cam	..	..	1	1	..	..
NE5022578	Grease cup	..	..	1	1	..	..
NE5024365	Spring	..	..	1	1	..	..
NE5024373	Grease plug	..	..	1	1	..	..
NE5010508	Coupling	..	..	1	1	..	..

packardinfo.com

Printed in U. S. A.

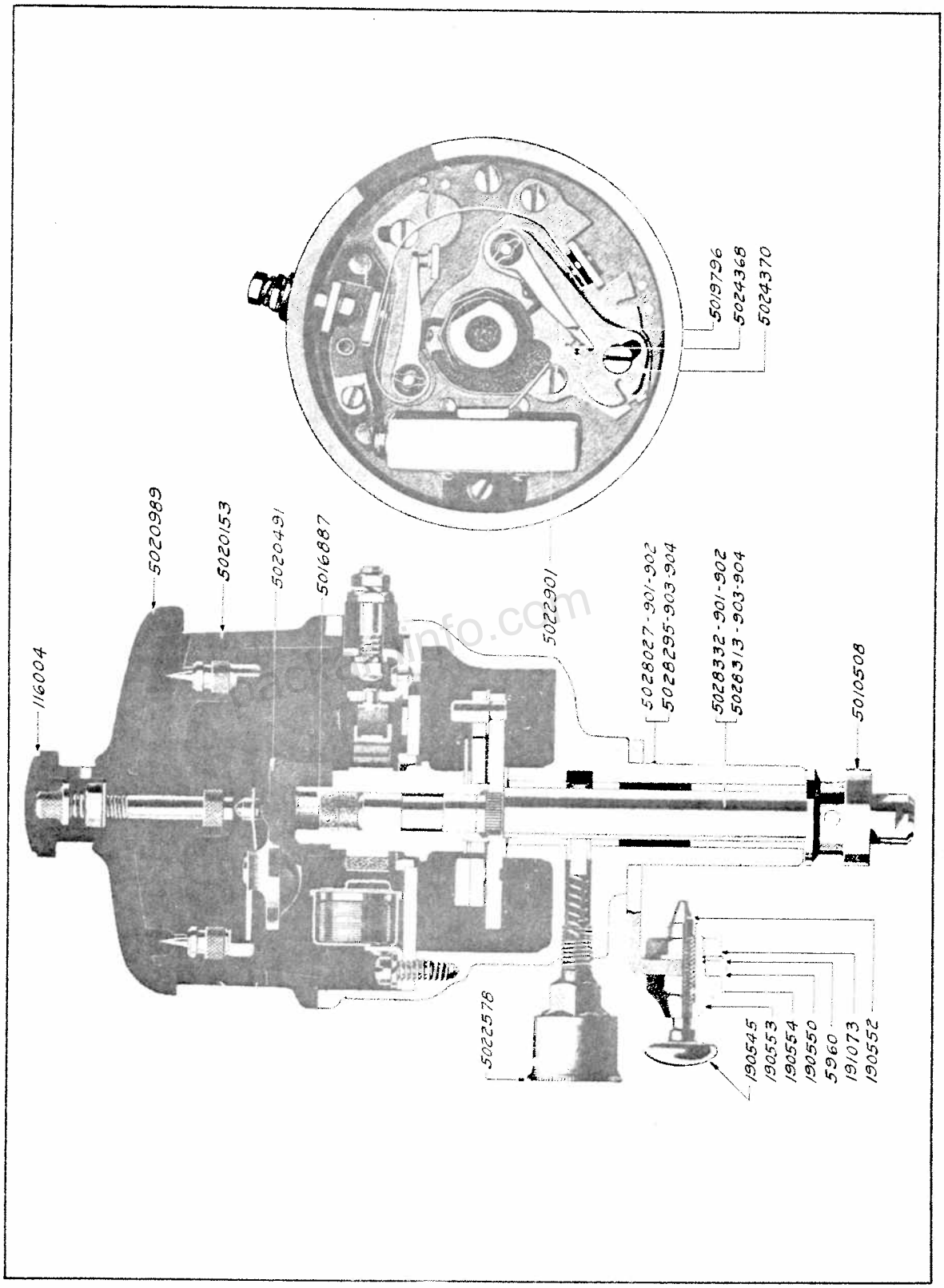

Printed in U. S. A.

packardinfo.com

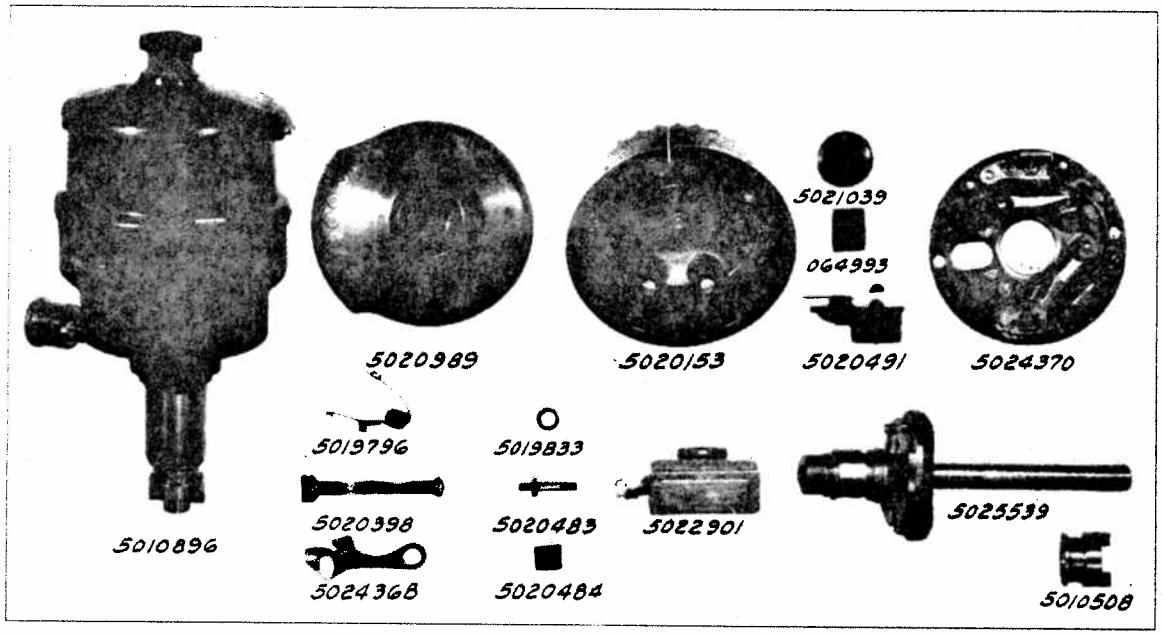

826-833-840-845

Piece No.	Name	No. Required 726 733	740 745	826 833	840 845	901 902	903 904
NE112011	Pin—coupling to shaft	.. ..	.. ..	1	1	..	..
NE5020493	Advance lever	.. ..	.. ..	1	1	..	..
NE132290	Clamping screw	.. ..	.. ..	1	1	..	..
NE115316	Nut	.. ..	.. ..	1	1	..	..
NE103319	Lockwasher	.. ..	.. ..	1	1	..	..
NE5020659	Screw—special	.. ..	.. ..	1	1	..	..
NE5020246	Spring washer	.. ..	.. ..	1	1	..	..
NE5020245	Washer	.. ..	.. ..	1	1	..	..

DISTRIBUTOR

(North East No. 5028025 for 901-902)
(North East No. 5028269 for 903-904)

The following are listed with the Manufacturer's piece numbers and are to be ordered direct from the North East Service Inc., Rochester, New York, or nearest Service Station.

NE5028025	Timer distributor	1	..
NE5028269	Timer distributor	..	1
NE5020989	Distributor cap cover	1	1
NE5020153	Distributor cap	1	1
NE5021039	Insulated terminal nut—high tension	1	1
NE064994	Terminal—high tension	1	1
NE064995	Eyelet	1	1
NE064993	Rubber bushing	1	1
NE116004	Terminal nut	1	1
NE5002259	Washer	1	1
NE115295	Binding post nut	1	1
NE106497	Lockwasher	1	1
NE5020491	Distributor rotor	1	1
NE5024370	Breaker plate assembly	1	1
NE5019796	Breaker arm and spring	2	2
NE5020141	Locking clip	2	2
NE5020423	Insulating washer	2	2

packardinfo.com

Piece No.	Name	No. Required 726 733	740 745	826 833	840 845	901 902	903 904
NE5020398	Connector					1	1
NE5019833	Insulating bushing					1	1
NE5024368	Adjustable contact plate—with contact					2	2
NE5023583	Screw—contact plate to breaker plate					2	2
NE132099	Screw—synchronizing plate to breaker plate					2	2
NE106497	Lockwasher					2	2
NE5027690	Cam lubricator					1	1
NE132109	Screw—breaker plate and condenser to housing					2	2
NE106497	Lockwasher					2	2
NE5022901	Condenser					1	1
NE132461	Terminal screw					1	1
NE106495	Lockwasher					1	1
NE5020483	Binding post—low tension					1	1
NE5020484	Insulating bushing					1	1
NE115295	Binding post nut					1	1
NE106497	Lockwasher					1	1
NE5028027	Lower housing assembly					1	
NE5028295	Lower housing assembly						1
NE5020485	Clasp					2	2
NE5024178	Rivet					2	2
NE5028332	Advance assembly					1	
NE5028313	Advance assembly						1
NE5028286	Shaft and bracket assembly					1	
NE5028298	Shaft and bracket assembly						1
NE5028293	Weight assembly—with small weight					1	1
NE5028294	Weight assembly—with large weight					1	1
NE5028296	Advance spring—short						1
NE5028291	Advance spring					1	
NE5028297	Advance spring—long						1
NE5028290	Cam assembly					1	
NE5028301	Cam assembly						1
NE5008462	Washer					2	2
NE5012627	Thrust washer					1	1
NE5016887	Oil wick—in breaker cam					1	1
NE5022578	Grease cup					1	1
NE5024365	Spring					1	1
NE5024373	Grease plug					1	1
NE5010508	Coupling					1	1
NE112011	Pin—coupling to shaft					1	1

DISTRIBUTOR CONTROL

156478	Motor distributor bracket	1	1	1	1		
191070	Motor distributor bracket					1	1
7704	Screw ($\frac{1}{4}$—28 x $\frac{3}{4}$" fill. hd.)	4	4	4	4		
7827	Screw ($\frac{1}{4}$—28 x $\frac{3}{4}$" hex. hd.)					3	3
5502	Lockwasher ($\frac{1}{4}$")	4	4	4	4	3	3
162624	Motor distributor drive shaft assembly	1	1	1	1	1	1
190550	Motor distributor lock plate					1	1
5701	Screw ($\frac{1}{4}$—28 x $\frac{9}{16}$" flat hd.)					3	3
190552	Motor distributor lock plunger					1	1
190553	Motor distributor lock plunger body					1	1
5960	Motor distributor lock plunger body lockwasher ($\frac{7}{16}$")					1	1
191073	Motor distributor lock plunger body nut					1	1
190545	Motor distributor lock plunger knob					1	1
190554	Motor distributor lock plunger spring					1	1
190551	Motor distributor lock ring					1	1
7894	Screw ($\frac{7}{16}$—28 x 1$\frac{7}{16}$" hex. hd.)					1	1
5502	Lockwasher ($\frac{1}{4}$")					1	1
7004	Nut ($\frac{1}{4}$"—28)					1	1

packardinfo.com

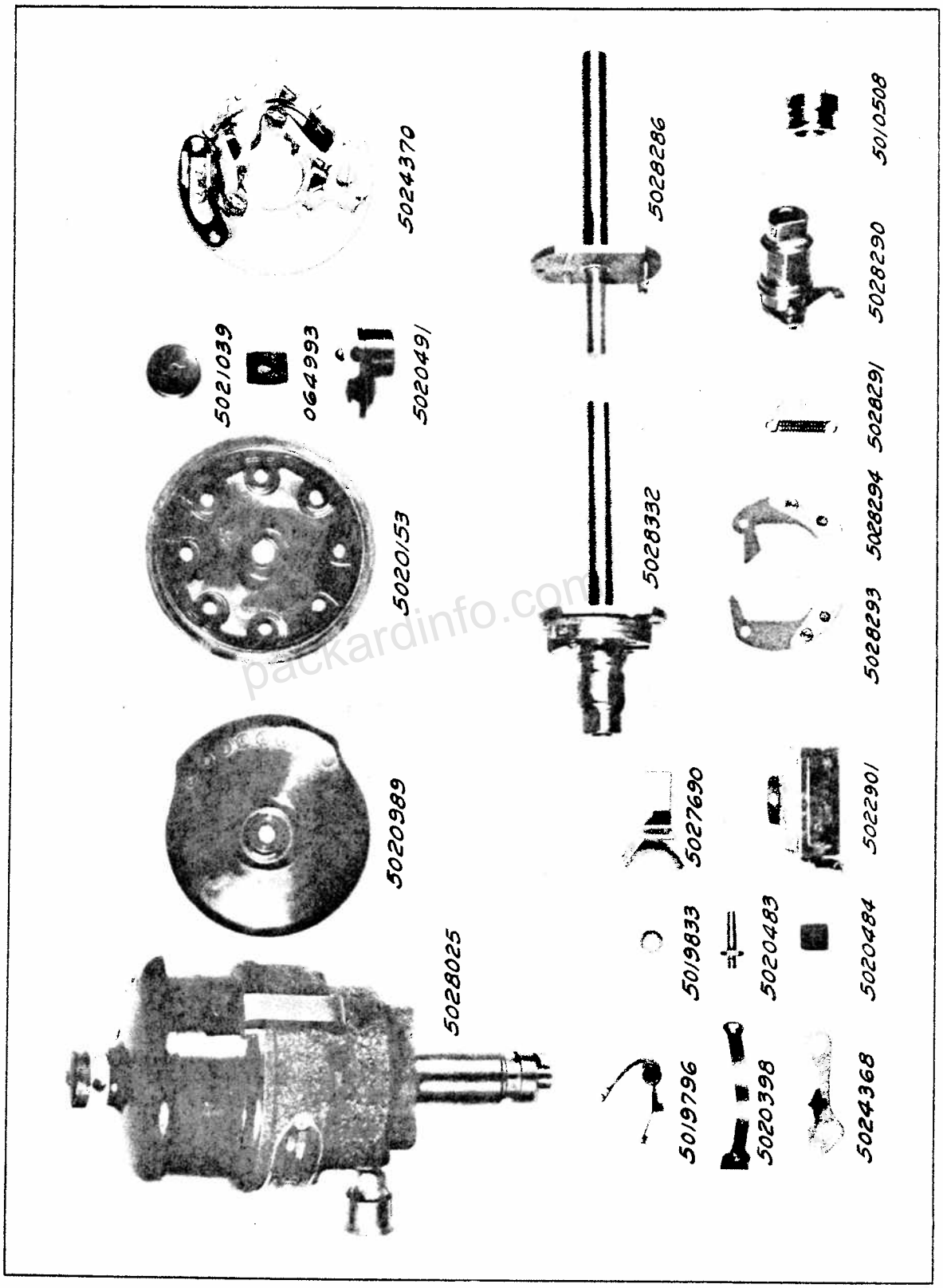

packardinfo.com

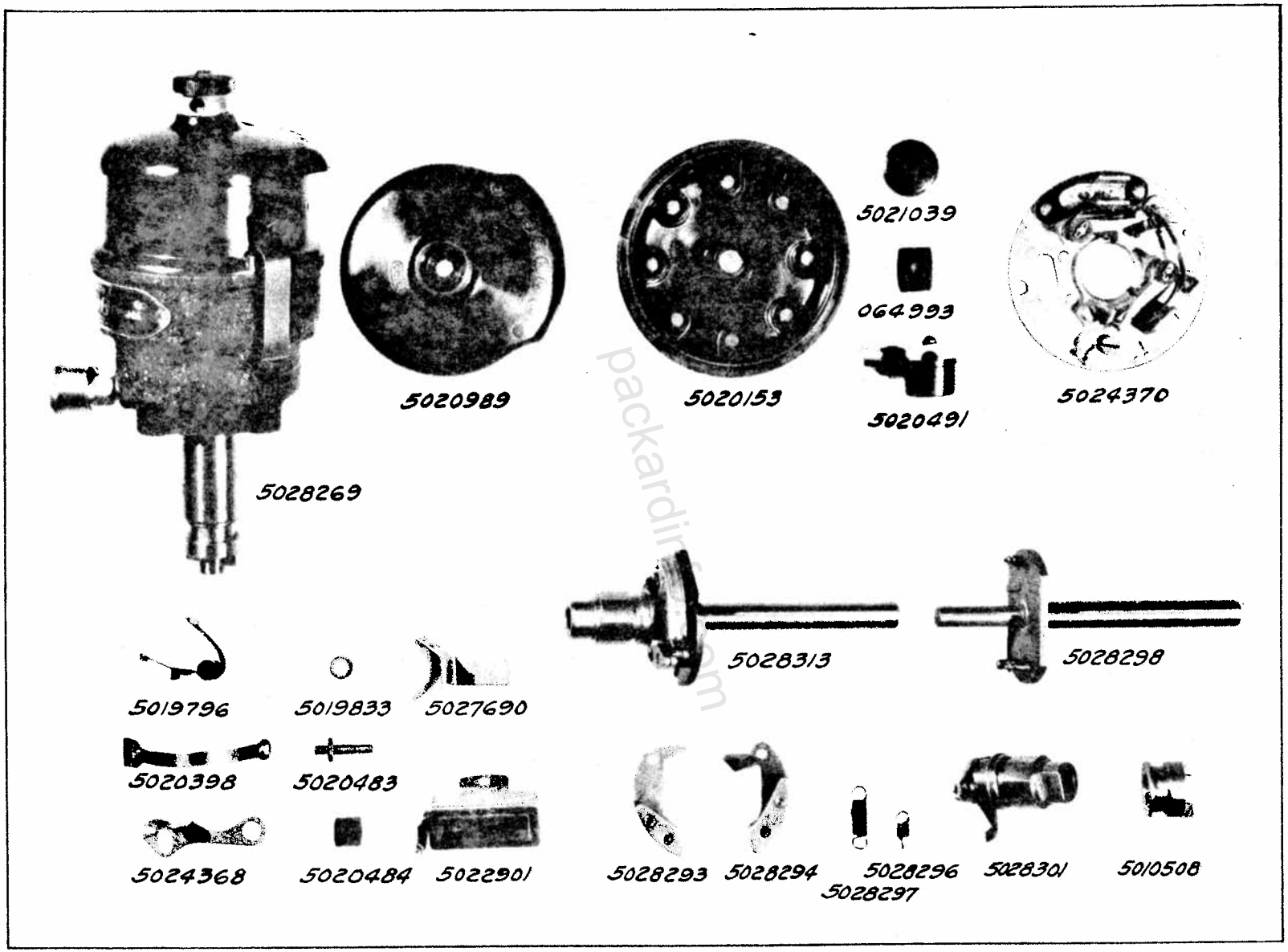

packardinfo.com

Piece No.	Name	No. Required 726 733	740 745	826 833	840 845	901 902	903 904
163420	Motor distributor mounting plate	1	1	1	1	..	..
156656	Motor distributor mounting screw	2	2	2	2	..	..
5502	Lockwasher (¼")	2	2	2	2	..	..
156473	Spring washer	2	2	2	2	..	..
156472	Washer	4	4	4	4	..	..
7004	Nut (¼"—28 plain)	2	2	2	2	..	..

ELECTRICAL INSTALLATION

(Photographs shown on Wiring Diagram)

1. 158234	Instrument board ammeter	1	1	1	1	..	..
2. 176912	Backing light switch assembly	1	1	1	1	..	..
3. 162461	Battery	1	..	..	..	..	..
3. 129489	Battery	..	1	1	1	..	..
4. 174095	Fender lamp assembly	2	..	2	..	..	..
4. 173363	Fender lamp assembly	..	2	..	2	..	..
5. 169553	Fuse block assembly	1	1	1	1	..	..
6. 171066	Headlight	2	..	2	..	..	..
6. 171069	Headlight	..	2	..	2	..	..
7. 172202	Instrument board reading light	1	1	..	..	..	..
7. 180784	Instrument board reading light	..	..	1	1	..	..
8. 183773	Horn	1	..	1	..	..	..
8. 148455	Horn	..	1	..	1	..	..
9. 179989	Horn button	..	..	1	..	..	..
9. 171197	Horn button	1	1	..	..	..	..
9. 184593	Horn button	..	..	..	1	..	..
10. 137651	Instrument board cigar lighter (Casolite type)	1	1	..	..	..	..
10. 183136	Instrument board cigar lighter (Casolite type)	..	..	1	1	..	..
10. 133303	Instrument board cigar lighter (Cuno type)	1	1	..	..	..	..
11. 169196	Instrument board ignition coil and switch assembly	1	1	..	..	..	..
11. 182147	Instrument board ignition coil and switch assembly	..	..	1	1	..	..
12. 146283	Instrument board light to switch cable assembly	1	1	1	1	..	..
13. 182459	Instrument board light switch	1	1	1	1	..	..
14. 179958	Motor distributor	1	1	1	1	..	..
15. 182029	Motor generator	1	1	1	1	..	..
16. 183793	Motor spark plug	8	8	8	8	..	..
17. 174398	Motor starter motor	1	..	1	..	..	..
17. 138083	Motor starter motor	..	1	..	1	..	..
18. 137015	Motor starter switch	1	1	1	1	..	..
19. 178009	Steering gear lighting switch assembly	1	1	1	1	..	..
20. 135909	Stoplight switch	1	1	..	..	..	..
20. 183067	Stoplight switch	..	..	1	1	..	..
21. 171171	Tail lamp	1	1	1	1	..	..
38. 181220	Running board lamp	..	..	..	2	..	..

CABLES

726—733—740—745

826—833—840—845

	Bulk Stock No. on Cable	Cable Length	Terminal	Insulator
22. Ignition coil to distributor high tension cable	78396	47"	163286 Coil 156626-M-Dist 156625-F-Dist	
23. Ignition coil to distributor low tension cable	166404	42"	33287	36111
24. Ignition high tension to spark plug No. 1 cable (726-733-826-833)	78396	24"	156625-F 156626-M	
24. Ignition high tension to spark plug No. 1 cable (740-745-840-845)	78396	25"	156625-F 156626-M	

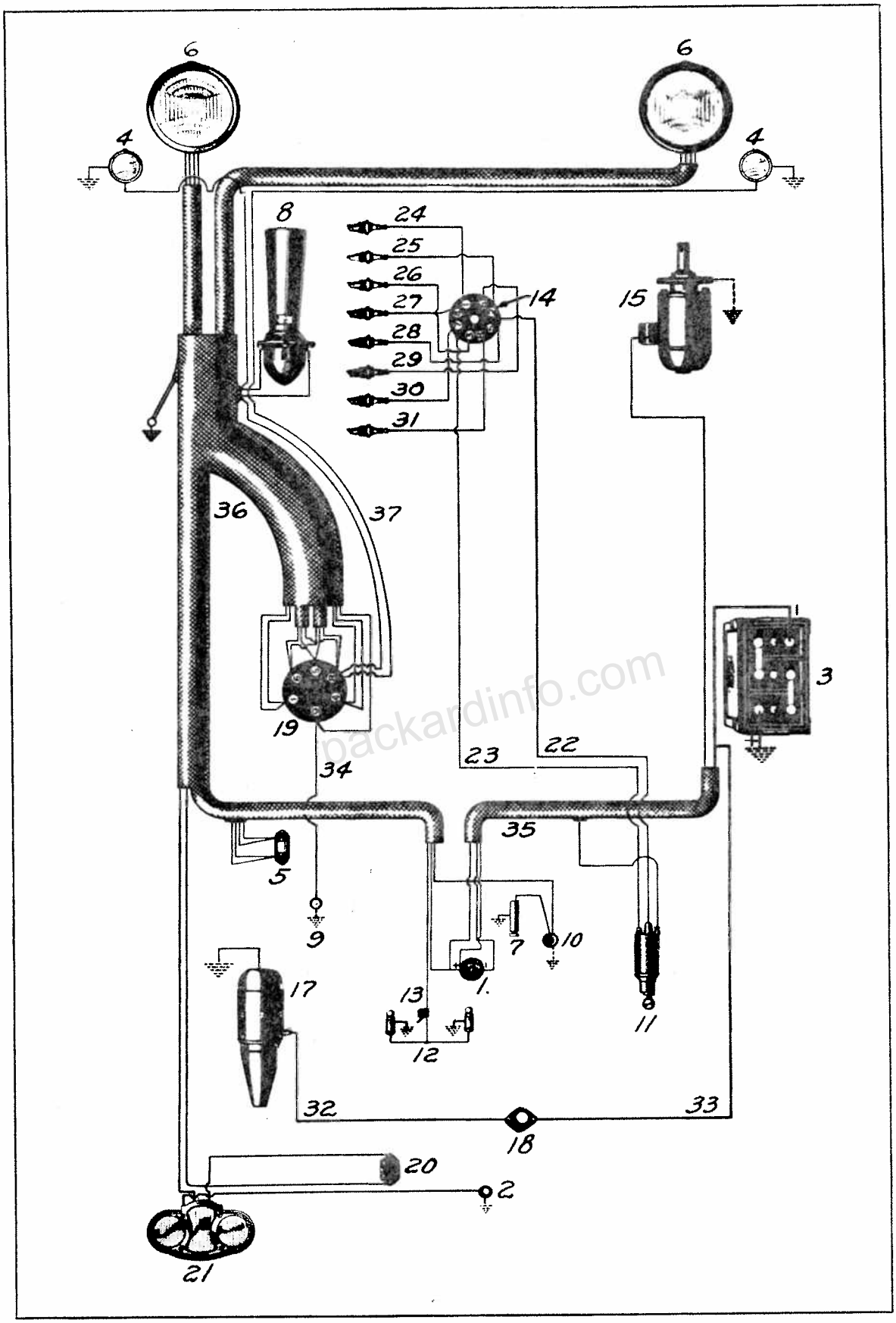

packardinfo.com

726-733-740-745

Printed in U. S. A.

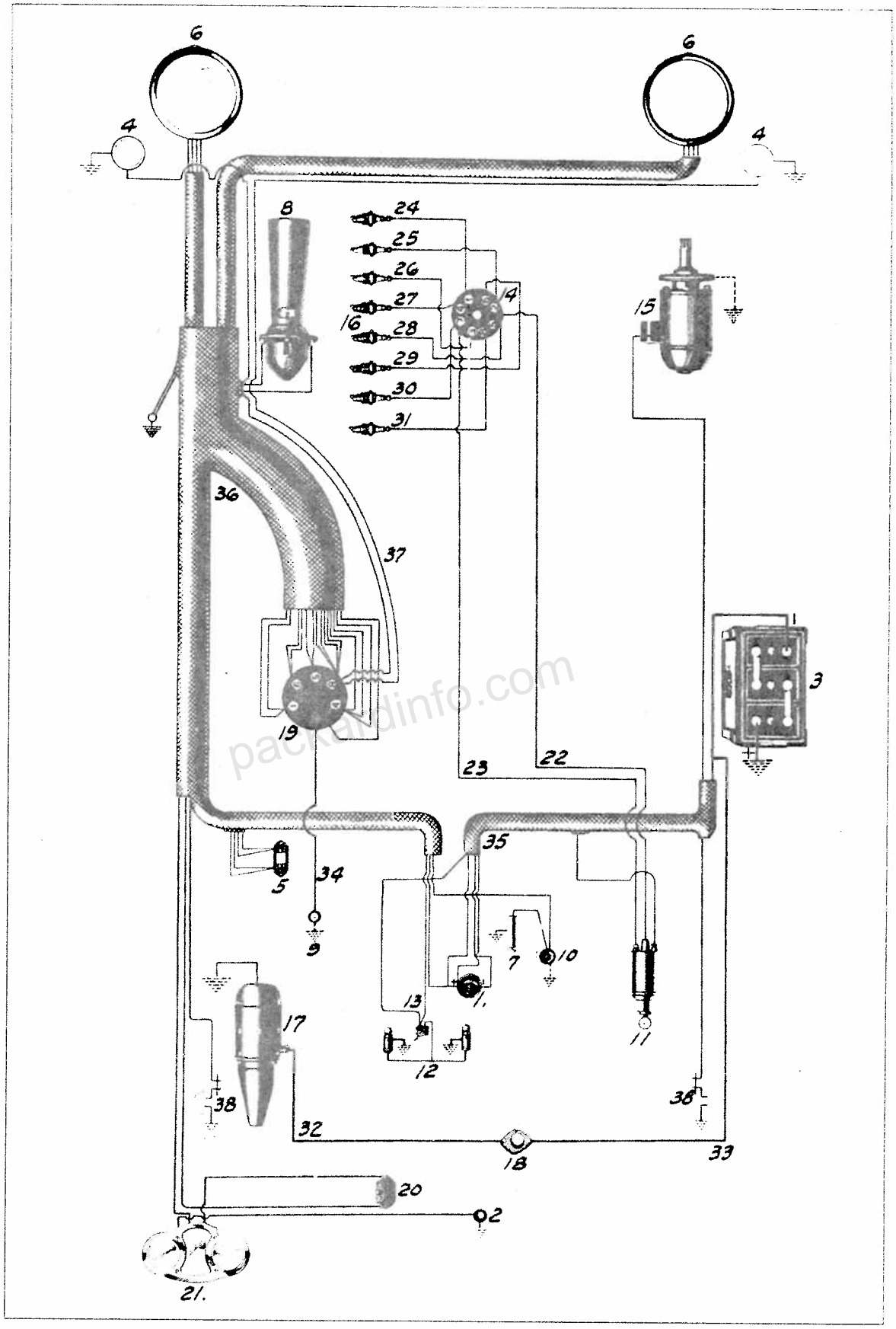

826-833-840-845

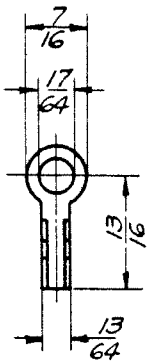

48202

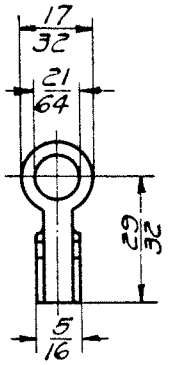

159085

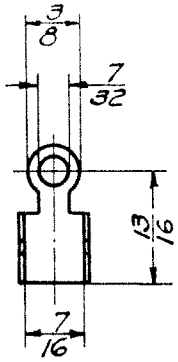

166872

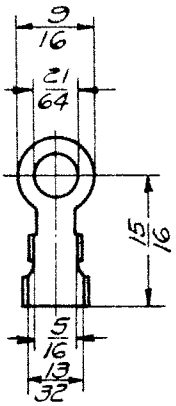

169549

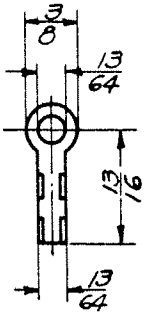

33287

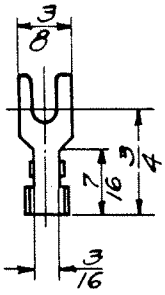

71397

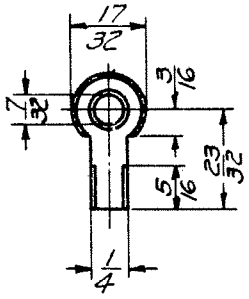

144785

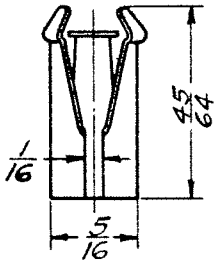

163286

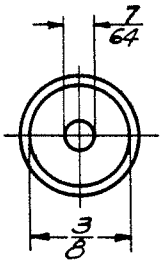

177676

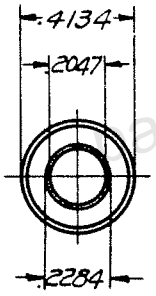

156626

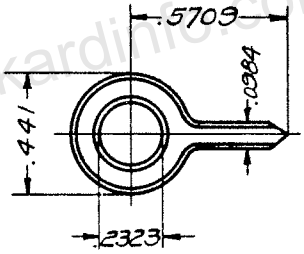

156625

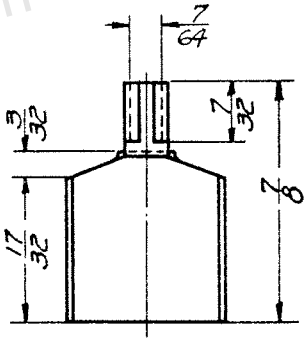

148994

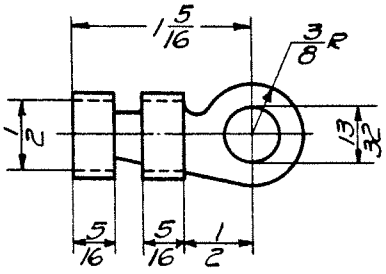

127279

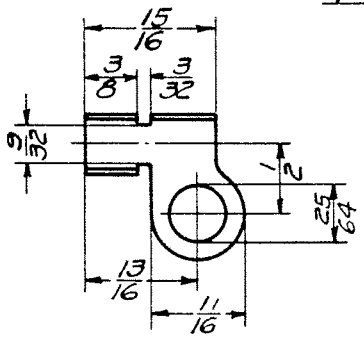

53127

TERMINALS

packardinfo.com

Printed in U. S. A.

Name	Bulk Stock No on Cable	Cable Length	Terminal	Insulators
25. Ignition high tension to spark plug No. 2 cable (726-733-826-833)	78396	22"	156625-F 156626-M	
25. Ignition high tension to spark plug No. 2 cable (740-745-840-845)	78396	23"	156625-F 156626-M	
26. Ignition high tension to spark plug No. 3 cable (726-733-826-833)	78396	18"	156625-F 156626-M	
26. Ignition high tension to spark plug No. 3 cable (740-745-840-845)	78396	18"	156625-F 156626-M	
27. Ignition high tension to spark plug No. 4 cable	78396	12"	156625-F 156626-M	
28. Ignition high tension to spark plug No. 5 cable (726-733-826-833)	78396	15"	156625-F 156626-M	
28. Ignition high tension to spark plug No. 5 cable (740-745-840-845)	78396	16"	156625-F 156626-M	
29. Ignition high tension to spark plug No. 6 cable	78396	17"	156625-F 156626-M	
30. Ignition high tension to spark plug No. 7 cable (726-733-826-833)	78396	19"	156625-F 156626-M	
30. Ignition high tension to spark plug No. 7 cable (740-745-840-845)	78396	20"	156625-F 156626-M	
31. Ignition high tension to spark plug No. 8 cable (726-733-826-833)	78396	26"	156625-F 156626-M	
31. Ignition high tension to spark plug No. 8 cable (740-745-840-845)	78396	25"	156625-F 156626-M	
32. Starter motor to starter switch cable	157432	9"	140076	
33. Battery frame junction to motor starter switch cable assembly (726-733)	116681	27"	127279	
33. Battery frame junction to motor starter switch cable assembly (740)	116681	34"	127279	
33. Battery frame junction to motor starter switch cable assembly (745)	116681	39"	127279	
33. Battery frame junction to motor starter switch cable assembly (826-833)	157432	30-1/4"	127279-140076	184988
33. Battery frame junction to motor starter switch cable assembly (840-845)	157432	34-1/2"	127279-140076	162450
34. Steering post horn button to lighting switch - terminal No. 9 cable (prior to frame No. 286865 for 726-733--181974 for 740--181301 for 745)	166404	60"	71397	36111
34. Steering post horn button to horn cable junction cable (after frame No. 286864 for 726-733 181973 for 740 and 181300 for 745)	166404	60"		
35. Wiring right assembly (726-733)	174071			
35. Wiring right assembly (740)	174072			
35. Wiring right assembly (745)	175280			
35. Wiring right assembly (used on 745 custom)	174072			
35. Wiring right assembly (826-833)	182294			
35. Wiring right assembly (840-845)	182296			
36. Wiring left assembly (used on 726)	173190			
36. Wiring left assembly (used on 733)	173191			
36. Wiring left assembly (used on 740)	173192			
36. Wiring left assembly (used on 745)	175281			
36. Wiring left assembly (used on 745 custom)	175718			
36. Wiring left assembly (826)	182290			
36. Wiring left assembly (833)	182291			
36. Wiring left assembly (840)	182292			
36. Wiring left assembly (845)	182293			
37. Wiring assembly--fender lamps	174076			

ELECTRICAL INSTALLATION

(Photographs shown on Wiring Diagram)

Piece No.	Name	No. Required 726 733	740 745	826 833	840 845	901 902	903 904
1. 186876	Instrument board ammeter	-	-	-	-	1	1
2. 191246	Battery	-	-	-	-	1	1
3. 190738	Fender Lamp assembly	-	-	-	-	2	-
3. 190692	Fender lamp assembly	-	-	-	-	-	2
4. 202176	Fuse block assembly (supersedes 169553)	-	-	-	-	1	1
5. 194098	Headlight	-	-	-	-	2	-
5. 194099	Headlight	-	-	-	-	-	2
6. 126578	Instrument reading light	-	-	-	-	1	1
7. 191172	Instrument reading light switch	-	-	-	-	1	1
8. 183773	Horn	-	-	-	-	1	-
8. 191848	Horn--right	-	-	-	-	-	1
8. 191779	Horn--left	-	-	-	-	-	1
9. 179989	Horn button	-	-	-	-	1	1
10. 187554	Instrument board cigar lighter	-	-	-	-	1	1
11. 196851	Instrument board ignition coil and switch assembly (supersedes 182147)	-	-	-	-	1	1
12. 190110	Instrument board light to switch cable assembly	-	-	-	-	1	1
13. 191172	Instrument board light switch	-	-	-	-	1	1
14. 202728	Motor distributor (supersedes 191071 and 191521)	-	-	-	-	1	1
15. 182029	Motor generator	-	-	-	-	1	1
16. 202635	Motor spark plug (supersedes 186872)	-	-	-	-	8	8
17. 174398	Motor starter motor	-	-	-	-	1	-
17. 138083	Motor starter motor	-	-	-	-	-	1
18. 137015	Motor starter switch	-	-	-	-	1	1
19. 178009	Steering gear lighting switch assembly	-	-	-	-	1	1
20. 190885	Stoplight switch	-	-	-	-	1	1
21. 190723	Tail lamp--left	-	-	-	-	1	-
21. 190722	Tail lamp--right	-	-	-	-	1	-
21. 186321	Tail lamp--right	-	-	-	-	-	1
21. 186320	Tail lamp--left	-	-	-	-	-	1
22. 181220	Running board light	-	-	-	-	-	2

CABLES

(901—902—903—904)

	Bulk Stock No. on Cable	Cable Length	Terminal	Insulators
23. Ignition coil to distributor high tension cable	207477	45-1/2"	163286 Coil 156626-M Dist. 156625-F Dist.	
24. Ignition coil to distributor low tension cable	166404	41-1/2"	33287	36111
25. Ignition high tension to spark plug No. 1 cable (901-902)	207477	25"	156625-F 156626-M	
25. Ignition high tension to spark plug No. 1 cable (903-904)	207477	26"	156625-F 156626-M	
26. Ignition high tension to spark plug No. 2 cable (901-902)	207477	23"	156625-F 156626-M	
26. Ignition high tension to spark plug No. 2 cable (903-904)	207477	24"	156625-F 156626-M	
27. Ignition high tension to spark plug No. 3 cable (901-902)	207477	17"	156625-F 156626-M	
27. Ignition high tension to spark plug No. 3 cable (903-904)	207477	18"	156625-F 156626-M	
28. Ignition high tension to spark plug No. 4 cable	207477	13-1/2"	156625-F 156626-M	
29. Ignition high tension to spark plug No. 5 cable	207477	16"	156625-F 156626-M	
30. Ignition high tension to spark plug No. 6 cable (901-902)	207477	18"	156625-F 156626-M	
30. Ignition high tension to spark plug No. 6 cable (903-904)	207477	19"	156625-F 156626-M	
31. Ignition high tension to spark plug No. 7 cable (901-902)	207477	20"	156625-F 156626-M	

packardinfo.com

Revised April, 1934 Printed in U.S.A.

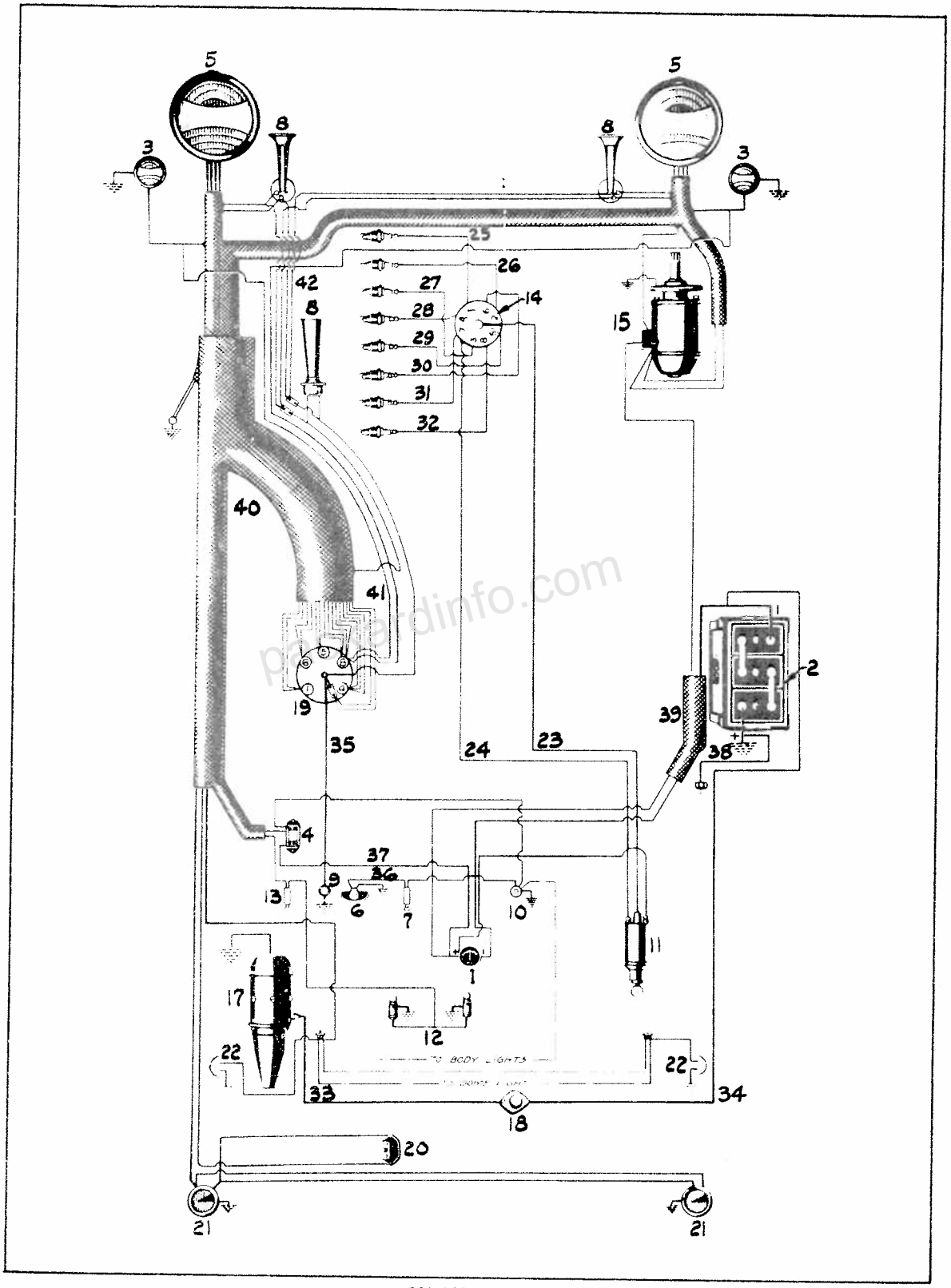

packardinfo.com

packardinfo.com

		Bulk Stock No. on Cable	Cable Length	Terminal	Insulators
				156625-F	
28.	Ignition high tension to spark plug No. 4 cable	78396	13 1/2"	156626-M	
				156625-F	
29.	Ignition high tension to spark plug No. 5 cable	78396	16"	156626-M	
				156625-F	
30.	Ignition high tension to spark plug No. 6 cable (901-902)	78396	18"	156626-M	
				156625-F	
30.	Ignition high tension to spark plug No. 6 cable (903-904)	78396	19"	156626-M	
				156625-F	
31.	Ignition high tension to spark plug No. 7 cable (901-902)	78396	20"	156626-M	
				156625-F	
31.	Ignition high tension to spark plug No. 7 cable (903-904)	78396	21"	156626-M	
				156625-F	
32.	Ignition high tension to spark plug No. 8 cable	78396	27"	156626-M	
33.	Starter motor to starter switch cable	157432	9"	140076	
34.	Battery frame junction to motor starter switch cable assembly			127279	184988
	(901-902)	157432	34 1/4"	140076	184988
34.	Battery frame junction to motor starter switch cable assembly			127279	
	(903-904)	157432	39 3/4"	140076	184988
					36111
35.	Steering post horn button to horn cable (901-902)	194198	63 3/4"	33287	194603
					36111
35.	Steering post horn button to horn cable (903-904)	194198	53 3/4"	33287	194603
36.	Reading light to reading light switch cable	194244	16"		
				194186	
37.	Ammeter to fuse block cable	166400	17 1/2"	33287	
38.	Battery ground cable assembly				
39.	Wiring right assembly (901-902)	194101			
39.	Wiring right assembly (903-904)	194100			
40.	Wiring left assembly (901) (with single horn)	194108			
40.	Wiring left assembly (901) (with double horn)	194880			
40.	Wiring left assembly (902) (with single horn)	194109			
40.	Wiring left assembly (902) (with double horn)	194881			
40.	Wiring left assembly (903)	194110			
40.	Wiring left assembly (904)	194111			
41.	Wiring assembly—fender lamps (901-902) use with single horn	174076			
42.	Wiring assembly—horn (901-902)	194654			

packardinfo.com

ELECTRICAL (Miscellaneous)

Piece No.	Name	No. Required 726 733	740 745	826 833	840 845	901 902	903 904
194186	Cable terminal 21/64" eye					x	x
33287	Cable terminal 13/64" eye	x	x	x	x	x	x
53127	Cable terminal side 25/64" eye	x	x	x	x	x	x
169549	Cable terminal 21/64" eye	x	x	x	x	x	x
144785	Cable terminal 7/32" eye	x	x	x	x	x	x
166872	Cable terminal 13/64" eye	x	x	x	x	x	x
71397	Cable terminal 11/64" eye	x	x	x	x	x	x
48202	Cable terminal 1/4" eye	x	x	x	x	x	x
148994	Cable terminal—special	x	x	x	x	x	x
7870	Headlight ground wire to frame screw	1	1	1	1	1	1
7004	Nut (1/4"—28 plain)	1	1	1	1	1	1
5502	Lockwasher (1/4")	1	1	1	1	1	1
182110	Horn to bracket screw nut	3	2		2		
183754	Horn to bracket screw nut			2		2	
5502	Lockwasher (1/4")	3	2		2		
4683	Lockwasher (7/32")			2		2	

Piece No.	Name	No. Required 726 733	740 745	826 833	840 845	901 902	903 904
194825	Horn cable clip	..	..	..	..	2	2
163484	Horn to horn button cables junction connector (single)	..	..	1	1	..	..
194643	Horn to horn button cables junction connector (single)	..	..	..	..	..	1
194643	Horn cable junction connector (single)	..	..	..	..	2	..
194261	Horn to cable junction connector (double)	..	..	..	..	..	2
5934	Horn to radiator shell brace screw (¼—28 x ¾" hex. hd.)	..	..	..	..	..	4
5502	Lockwasher (¼")	..	..	..	..	..	4
185438	Ignition coil to distributor high tension cable tube equipment	1	1	1	1	..	..
185422	Ignition high tension cable tube assembly	1	..	1	..	..	..
185421	Ignition high tension cable tube assembly	..	1	..	1	..	..
194285	Motor to frame ground cable assembly	..	..	..	..	1	1
5958	Screw (⅜—24 x 1 3/16" hex. hd.)	..	..	..	..	..	1
5506	Lockwasher (⅜")	..	..	..	..	..	1
7006	Nut (⅜"—24)	..	..	..	..	..	1
3877	Washer	..	..	..	..	..	1
179851	Motor generator cable to frame clip	..	..	..	..	2	2
5374	Motor starter motor screw (½—20 x 1⅜" hex. hd.)	..	..	..	..	..	1
5510	Lockwasher (½")	1	1	1	1	1	1
3884	Washer (½" plain)	1	1	1	1	1	1
167660	Motor starter switch and ammeter cable insulator	1	1	1	1	1	1
137014	Motor starter switch cap	1	1	1	1	1	1
5764	Screw (¼—28 x ¾" O. H. mach.)	1	1	1	1	1	1
5959	Screw (¼—28 x ⅜" fill. hd. mach.)	2	2	2	2	..	..
5502	Lockwasher (¼")	..	..	..	..	2	2
175714	Motor starter switch terminal nut	..	..	..	..	2	2
175715	Motor starter switch terminal nut lockwasher	2	2	2	2	2	2
146955	Tail light cable strap clamp (¼ x 1 3/16")	2	2	2	2	2	2
167103	Tail light cable clip	1	1	1	2	..	..
194155	Tail light cable clip	4	4	4	5	3	3
157696	Wire backing light cable clip	..	..	..	..	3	3
157746	Wiring backing light switch connecting terminal	1	1	1	1	..	..
132449	Wiring fuel pump cable clip—single	1	1	..	..	..	..
7706	Screw (No. 10—32 x ½" fill. hd.)	..	..	1	1	..	..
5500	Lockwasher (No. 10 std.)	..	..	1	1	..	..
7003	Nut (No. 10—32 std.)	..	..	1	1	..	..
166330	Wiring fuse	..	..	1	1	..	..
169553	Wiring fuse block assembly	1	1	1	1	1	1
7716	Screw (No. 10—32 x 1¼" fill. hd.)	1	1	1	1	1	1
5392	Screw (No. 10—32 x 1" fill. hd.)	2	2	..	..	..	..
5923	Screw (No. 10—32 x 2" fill. hd.)	2	2	2	2	..	..
3866	Washer (3/16" plain)	..	..	..	..	2	2
3868	Washer (¼" plain)	2	2	2	2	..	..
5500	Lockwasher (3/16")	2	2	..	..	..	..
7003	Nut (No. 10—32 plain)	2	2	2	2	2	2
169547	Wiring fuse block base	4	4	4	4	4	4
184478	Wiring fuse block cable clip	1	1	1	1	1	1
169550	Wiring fuse block strap connector	..	..	..	..	2	2
169548	Wiring fuse block strap connector insulator	2	2	2	2	2	2
61304	Wiring generator cable clip	2	2	2	2	2	2
184835	Wiring generator cable clip	1	1	..	..	..	..
194286	Wiring generator cable clip	..	..	1	..	..	..
145923	Wiring headlight cable clip	..	..	..	..	2	2
194598	Wiring headlight cable clip	2	2	2	2	..	..
157692	Wiring headlight cable to mudguard clip	..	..	..	..	3	3
7706	Screw (No. 10—32 x ½" fill. hd.)	..	..	..	..	1	1
167261	Screw (No. 10—.187 x ⅜")	2	2	2	2	..	..
5500	Lockwasher (3/16")	..	..	..	..	2	2
7003	Nut (No. 10—32 plain)	2	2	2	2	..	..
144926	Wiring ignition coil cable retaining ring	2	2	2	2	..	..
173367	Wiring instrument board cables to dash clip—inner	1	1	1	1	..	..
5569	Screw (No. 10—32 x ½" fill. hd.)	2	2	2	2	..	..

packardinfo.com

Printed in U. S. A.

Piece No.	Name	No. Required 726 733	740 745	826 833	840 845	901 902	903 904
5500	Lockwasher ($\frac{3}{16}$")	2	2	2	2	..	..
7003	Nut (No. 10—32 plain)	2	2	2	2	..	..
35579	Wiring instrument board cable to dash clip—lower	2	2	2	2	..	..
5389	Screw (No. 10—32 x $\frac{7}{16}$" fill. hd.)	2	2	2	2	..	..
5500	Lockwasher ($\frac{3}{16}$")	2	2	2	2	..	..
7003	Nut (No. 10—32 plain)	2	2	2	2	..	..
162552	Wiring (left) instrument board cable to dash clip—outer	1	1	1	1	..	..
162552	Wiring (right) instrument board cable to dash clip—outer	1	1	..	..	..	..
173367	Wiring (right) instrument board cable to dash clip—outer	..	..	1	1	..	..
5569	Wiring (right) instrument board cable to dash clip outer screw	..	..	1	1	..	..
5500	Lockwasher (No. 10)	..	..	1	1	..	..
7003	Nut (No. 10—32)	..	..	1	1	..	..
35579	Wiring (left) instrument board cable to frame clip	..	1	..	1	..	..
145923	Wiring (left) instrument board cable to frame clip	1	..	1	..	..	..
7706	Screw (No. 10—32 x $\frac{1}{2}$" fill. hd.)	..	1	..	1	..	..
5500	Lockwasher ($\frac{3}{16}$")	..	1	..	1	..	..
7003	Nut (No. 10—32 plain)	..	1	..	1	..	..
194272	Wiring instrument board cable clip	..	..	..	..	2	2
169154	Wiring instrument board cable tube	1	1	1	1	..	..
146583	Wiring—running board lamp cable clip	..	..	..	2	..	2
194271	Wiring—running board lamp cable clip	..	..	..	..	..	2
7706	Bolt (No. 10—32 x $\frac{1}{2}$" fill. hd.)	..	..	..	2	..	2
7003	Nut (No. 10—32)	..	..	..	2	..	2
5500	Lockwasher (No. 10)	..	..	..	2	..	2
3868	Washer	..	..	..	..	..	2
157692	Wiring—steering gear to frame cable clip	1	1	1	1	1	1
7870	Screw ($\frac{1}{4}$"—28 x $\frac{5}{8}$" hex. hd.)	1	1	1	1	1	1
5502	Lockwasher ($\frac{1}{4}$")	1	1	1	1	1	1
7004	Nut ($\frac{1}{4}$"—28 plain)	1	1	1	1	1	1
139466	Wiring—stop light switch cable clip	..	..	1	1	..	..
129773	Wiring—tail light cables clip	1	1	..	..	1	1
7706	Screw (No. 10—32 x $\frac{1}{4}$" fill. hd.)	1	1	..	..	..	..
5500	Lockwasher ($\frac{3}{16}$")	1	1	..	..	..	..
7003	Nut (No. 10—32 plain)	1	1	..	..	..	..
184478	Wiring—tail lamp right cable clip	..	..	..	..	2	2
5569	Screw (No. 10—32 x $\frac{1}{2}$" fill. hd.)	..	..	..	..	..	2
5500	Lockwasher ($\frac{3}{16}$")	..	..	..	..	..	2
7003	Nut (No. 10—32)	..	..	..	..	..	2
194271	Wiring—tail lamp left cable clip	..	..	..	..	1	1
194465	Wiring—tail lamp left cable clip	..	..	..	..	1	1

EXHAUST AND INTAKE

183447	Exhaust expansion chamber	..	..	1	..	..	..
183448	Exhaust expansion chamber	..	..	..	1	..	..
184736	Exhaust manifold	..	..	..	1	..	..
184741	Exhaust manifold	..	..	1	..	..	..
194367	Exhaust and intake manifold assembly—complete	..	..	..	..	1	..
194368	Exhaust and intake manifold assembly—complete	..	..	..	..	..	1
175484	Exhaust and intake manifold	1	..	..	..	..	..
175485	Exhaust and intake manifold	..	1	..	..	..	..
158033	Exhaust manifold to cylinder gasket—center	1	..	..	..	..	..
190544	Exhaust manifold to cylinder gasket—center	..	..	..	..	1	..
166865	Exhaust manifold to cylinder gasket—center	..	1	..	..	..	..
190543	Exhaust manifold to cylinder gasket—center	..	..	..	..	..	1
180003	Exhaust manifold to cylinder gasket—center	..	..	1	..	..	..
179564	Exhaust manifold to cylinder gasket—center	..	..	..	1	..	..
180002	Exhaust manifold to cylinder gasket—intermediate	..	..	2	..	..	..
190542	Exhaust manifold to cylinder gasket—intermediate	..	..	..	..	2	..

PackardInfo.com

Piece No.	Name	No. Required 726 733	740 745	826 833	840 845	901 902	903 904
179562	Exhaust manifold to cylinder gasket—intermediate	..	..	..	2	..	..
190541	Exhaust manifold to cylinder gasket—intermediate	..	..	..	..	..	2
178847	Exhaust manifold to cylinder gasket—intermediate	2	..	..	..	..	..
178845	Exhaust manifold to cylinder gasket—intermediate	..	2	..	..	..	..
175912	Exhaust manifold to cylinder gasket—outer	2	..	..	..	..	..
175913	Exhaust manifold to cylinder gasket—outer	..	2	..	..	..	..
180001	Exhaust manifold to cylinder gasket—outer	..	..	2	..	2	..
179563	Exhaust manifold to cylinder gasket—outer	..	..	..	2	..	2
175911	Exhaust manifold to cylinder stud	..	..	13	13	13	13
5504	Lockwasher ($\frac{5}{16}$" std.)	..	..	13	13	13	13
5742	Washer ($\frac{5}{16}$" plain special)	..	..	13	13	13	13
7405	Nut ($\frac{5}{16}$"—24 plain S. A. E.)	..	..	13	13	13	13
175911	Exhaust and intake manifold to cylinder stud	17	17	..	..	..	..
5504	Lockwasher ($\frac{5}{16}$")	4	4	..	..	..	..
5742	Washer ($\frac{5}{16}$" plain)	13	13	..	..	..	..
7405	Nut ($\frac{5}{16}$"—24 plain)	17	17	..	..	..	..
97809	Exhaust muffler change over equipment (used on 726)	1	..	..	..	..	..
97810	Exhaust muffler change over equipment (used on 733)	1	..	..	..	..	..
97811	Exhaust muffler change over equipment (used on 740)	..	1	..	..	..	..
97812	Exhaust muffler change over equipment (used on 745)	..	1	..	..	..	..
163234	Exhaust muffler assembly	1	..	..	..	..	..
183058	Exhaust muffler assembly	..	..	1	..	..	..
190690	Exhaust muffler assembly	..	..	..	..	1	..
163235	Exhaust muffler assembly	..	1	..	..	..	..
194639	Exhaust muffler assembly	..	..	..	..	..	1
183059	Exhaust muffler assembly	..	..	..	1	..	..
177078	Exhaust muffler to frame nut	4	4	..	..	..	..
194641	Exhaust muffler bracket	..	..	..	..	..	1
183061	Exhaust muffler bracket—front	..	..	1	..	..	..
191869	Exhaust muffler bracket—front (used on 901)	..	..	..	..	1	..
183077	Exhaust muffler bracket—front	..	..	..	1	..	..
194300	Exhaust muffler bracket—front (used on 902)	..	..	..	..	1	..
170265	Exhaust muffler bracket—rear	1	..	..	..	..	..
191863	Exhaust muffler bracket—rear	..	..	..	..	1	..
171950	Exhaust muffler bracket—rear	..	1	..	..	..	..
183065	Exhaust muffler bracket—rear (used on 826)	..	..	1	..	..	..
175916	Exhaust muffler bracket—rear (used on 745 custom)	..	1	..	..	..	..
183101	Exhaust muffler bracket—rear (used on 833)	..	..	1	..	..	..
183100	Exhaust muffler bracket—rear (used on 840)	..	..	..	1	..	..
183470	Exhaust muffler bracket—rear (used on 845)	..	..	..	1	..	..
183071	Exhaust muffler bracket—center (for 826 only)	..	..	1	..	..	..
183075	Exhaust muffler bracket—center (for 833 only)	..	..	1	..	..	..
183103	Exhaust muffler bracket—center (for 840 only)	..	..	..	1	..	..
183102	Exhaust muffler bracket—center (for 845 only)	..	..	..	1	..	..
7806	Screw ($\frac{5}{16}$—24 x $\frac{3}{4}$" hex. hd.)	2	2	..	..	..	..
5504	Lockwasher ($\frac{5}{16}$")	2	2	..	..	..	..
5506	Lockwasher ($\frac{3}{8}$")	4	4	..	..	..	..
7005	Nut ($\frac{5}{16}$"—24 plain)	2	2	..	..	..	..
190171	Exhaust muffler bracket cap	..	..	..	..	2	1
7822	Exhaust muffler bracket clamp screw	..	..	3	3	4	2
5506	Lockwasher ($\frac{3}{8}$")	..	..	3	3	4	2
7006	Nut ($\frac{3}{8}$"—24 S. A. E. plain std.)	..	..	3	3	4	2
186140	Washer (special)	..	..	6	6	8	4
183053	Exhaust muffler bracket insulator	..	..	16	16	8	4
183111	Exhaust muffler bracket insulator bolt	..	..	8	8	4	2
176864	Exhaust muffler bracket insulator bolt washer	..	..	8	8	4	2
7105	Nut ($\frac{5}{16}$"—24 castle)	..	..	8	8	4	2
4280	Cotter pin ($\frac{1}{16}$ x $\frac{1}{2}$")	..	..	8	8	4	2
169250	Exhaust muffler clamp—front (2$\frac{1}{4}$")	1	..	..	..	..	..
169252	Exhaust muffler clamp—front (2$\frac{1}{2}$")	..	1	..	..	..	..

packardinfo.com

Piece No.	Name	No. Required 726 733	740 745	826 833	840 845	901 902	903 904
169251	Exhaust muffler clamp—rear (2⅛")	1					
169250	Exhaust muffler clamp—rear (2¼")		1				
7853	Bolt	2	2				
7006	Nut	2	2				
179229	Exhaust muffler outlet tube assembly (used on 745)		1				
183752	Exhaust muffler outlet tube assembly (used on 845)				1		
179553	Exhaust muffler outlet tube assembly (used on 740)		1				
183751	Exhaust muffler outlet tube assembly (used on 840)				1		
179230	Exhaust muffler outlet tube assembly (used on 745 custom)		1				
170264	Exhaust muffler outlet tube (used on 726)	1					
183070	Exhaust muffler outlet tube (used on 826)			1			
170263	Exhaust muffler outlet tube (used on 733)	1					
194642	Exhaust muffler outlet tube						1
183078	Exhaust muffler outlet tube (used on 833)			1			
191868	Exhaust muffler outlet tube					1	
167979	Exhaust muffler outlet tube rear bracket	1					
183066	Exhaust muffler outlet tube rear bracket			1			
167978	Exhaust muffler outlet tube rear bracket (used on 740)		1				
167977	Exhaust muffler outlet tube rear bracket (used on 745)		1				
183105	Exhaust muffler outlet tube rear bracket				1		
190145	Exhaust muffler outlet tube bracket					1	
191960	Exhaust muffler outlet tube bracket—front						1
194640	Exhaust muffler outlet tube bracket—rear (prior to frame No. 193757)						1
194914	Exhaust muffler outlet tube bracket—rear (after frame No. 193756)						1
7826	Exhaust muffler outlet tube bracket bolt (5/16"—24 x 5/8" hex. hd.)						2
7005	Nut (5/16"—24)						2
5504	Lockwasher (5/16")						2
7822	Exhaust muffler outlet tube bracket rear clamp screw						1
5506	Lockwasher						1
7006	Nut						1
186140	Washer						1
7806	Exhaust muffler outlet tube bracket clamp screw (5/16"—24 x 3/4" hex. hd.)	2	2				
5504	Lockwasher (5/16")	2	2				
7005	Nut (5/16"—24 plain)	2	2				
7853	Screw (3/8"—24 x 1⅛" hex. hd.)	1	1				
7006	Nut (3/8"—24 plain)	1	1				
5506	Lockwasher (3/8")	1	1				
190128	Exhaust muffler outlet tube clamp					1	
190718	Exhaust muffler outlet tube clamp						1
7822	Exhaust muffler outlet tube clamp screw (3/8"—24 x 1½" hex. hd.)					1	1
186140	Exhaust muffler outlet tube clamp screw washer					2	2
5506	Lockwasher (3/8")					1	1
7006	Nut (3/8"—24)					1	1
182129	Exhaust pipe assembly			1			
163214	Exhaust pipe assembly	1					
183107	Exhaust pipe assembly				1		
163248	Exhaust pipe assembly—covered		1				
191858	Exhaust pipe assembly (used on 901)					1	
191859	Exhaust pipe assembly (used on 902)					1	
191955	Exhaust pipe assembly (used on 903)						1
191956	Exhaust pipe assembly (used on 904)						1
191952	Exhaust pipe clamp						1
190729	Exhaust pipe clamp					1	
5506	Lockwasher (3/8")					1	1
186140	Washer					2	2
7006	Nut (3/8"—24)					1	1
7822	Screw (3/8"—24 x 1½" hex. hd.)					1	1
162239	Exhaust pipe cover—curved		1				
163267	Exhaust pipe cover—long		1				
141533	Exhaust pipe cover clamp—1½"		1				
141532	Exhaust pipe cover clamp—¾"		7				

packardinfo.com

Piece No.	Name	No. Required 726 733	740 745	826 833	840 845	901 902	903 904
5376	Exhaust pipe to exhaust manifold screw (3/8—24 x 1 3/4" hex. hd.)	4	4	4	4	4	4
5506	Lockwasher (3/8")	4	4	4	4	4	4
7406	Nut (3/8"—24 plain)	4	4	4	4	4	4
132585	Exhaust pipe flange front gasket	1	..	1	..	1	..
141535	Exhaust pipe flange front gasket	..	1	..	1	..	1
7809	Exhaust pipe support bracket—screw (5/16—24 x 7/8" hex. hd.)	1	..	..	..	..	..
7811	Exhaust pipe support bracket—screw (5/16—24 x 1 3/8" hex. hd.)	..	1	..	..	..	..
7005	Exhaust pipe support bracket—nut (5/16"—24 plain)	1	1	..	..	..	..
3909	Exhaust pipe support bracket—washer (5/16" plain)	1	..	..	..	..	..
3874	Exhaust pipe support bracket—washer (5/16" plain)	..	1	..	..	..	..
5504	Lockwasher (5/16")	1	1	..	..	..	..
127032	Exhaust pipe support bracket liner	..	2	..	..	..	..
127033	Exhaust pipe support bracket liner retainer	..	1	..	..	..	..
184749	Intake manifold assembly	..	..	1	..	..	..
184750	Intake manifold assembly	..	..	..	1	..	..
194368	Intake and exhaust manifold assembly—complete	..	..	..	..	..	1
194367	Intake and exhaust manifold assembly—complete	..	..	..	..	1	..
186684	Intake manifold—front lower	..	..	..	..	1	..
186678	Intake manifold—front lower	..	..	..	..	..	1
186683	Intake manifold—rear lower	..	..	..	..	1	..
186679	Intake manifold—rear lower	..	..	..	..	..	1
184740	Intake manifold upper to lower gasket	..	..	..	..	2	..
184734	Intake manifold upper to lower gasket	..	..	..	..	..	2
184744	Intake manifold upper to lower stud	..	..	4	4	..	..
5855	Washer (3/8" plain special)	..	..	4	4	..	..
5506	Lockwasher (3/8")	..	..	4	4	..	..
7006	Nut (3/8"—24 plain)	..	..	4	4	..	..
178848	Intake manifold to cylinder gasket	2	..	..	..	..	..
178846	Intake manifold to cylinder gasket	..	2	..	..	..	..
5956	Intake manifold upper to lower screw (3/8—24 x 1 3/16" hex. hd.)	..	..	..	..	4	4
5506	Intake manifold upper to lower screw lockwasher (3/8")	..	..	..	..	4	4
180004	Intake manifold to cylinder gasket	..	..	..	..	4	..
190544	Intake manifold to cylinder gasket—center	..	..	..	..	1	..
179570	Intake manifold to cylinder gasket	..	..	..	..	..	4
180004	Intake manifold to cylinder gasket—outer	..	..	2	..	..	..
180005	Intake manifold to cylinder gasket—center	..	..	1	..	..	..
184476	Intake manifold to cylinder gasket—center	..	..	..	1	..	..
179570	Intake manifold to cylinder gasket—outer	..	..	..	2	..	..
175911	Intake manifold to cylinder stud	..	..	9	9	8	8
7405	Nut (5/16"—24 plain)	..	..	9	9	8	8
5742	Washer (5/16" plain special)	..	..	9	9	8	8
5504	Lockwasher (5/16" std.)	..	..	9	9	8	8

FENDER LAMP

190738	Fender lamp assembly	..	..	..	..	2	..
173363	Fender lamp assembly	..	2	..	2	..	..
190692	Fender lamp assembly	..	..	..	..	..	2
174095	Fender lamp assembly	2	..	2	..	..	..
173359	Fender lamp bracket	2	2	2	2	..	..
180211	Fender lamp bracket gasket	2	2	2	2	..	..
102590	Fender lamp bulb	2	2	2	2	2	2
173596	Fender lamp cable conduit—29" long	2	2	2	..	2	..
179315	Fender lamp cable conduit—16" long	..	2	..	2	..	..
194818	Fender lamp cable conduit—29" long	..	..	..	..	2	2
173357	Fender lamp clamping plate	2	2	2	2	2	2
178658	Fender lamp door assembly	2	..	2	..	2	..

Printed in U. S. A.

Piece No.	Name	No. Required 726 733	740 745	826 833	840 845	901 902	903 904
178661	Fender lamp door assembly	..	2	..	2	..	2
178659	Fender lamp door glass	2	..	2	..	2	..
178662	Fender lamp door glass	..	2	..	2	..	2
178657	Fender lamp door glass gasket	2	..	2	..	2	..
178660	Fender lamp door glass gasket	..	2	..	2	..	2
173364	Fender lamp to fender screw	2	2	2	2	..	..
7007	Fender lamp to fender nut	..	..	..	..	2	2
5728	Lockwasher ($\frac{1}{4}$") special	2	2	2	2	2	2
184406	Fender lamp focus adjusting screw	2	2	2	2	2	2
194918	Fender lamp gasket	..	..	..	..	2	2

FENDERS, RUNNING BOARDS AND SPLASHERS

170882	Front fender—right assembly, (without well)	1	..	..	..	..	..
180597	Front fender—right assembly (without well)	..	..	1	..	..	..
186912	Front fender—right assembly (without well)	..	..	..	..	1	..
171550	Front fender—right assembly (with well)	1	..	..	..	..	..
180607	Front fender—right assembly (with well)	..	..	1	..	..	..
191273	Front fender—right assembly (with well) (prior to frame No. 344176)	..	..	..	..	1	..
194694	Front fender—right assembly (with well) (after frame No. 344175 for 901-2 and 193787 for 903-4)	..	..	..	..	1	1
170884	Front fender—right assembly (without well) (used on 740)	..	1	..	..	..	..
180603	Front fender—right assembly (without well)	..	..	..	1	..	..
190360	Front fender—right assembly (without well)	..	..	..	..	..	1
171552	Front fender—right assembly (with well) (used on 740)	..	1	..	..	..	..
180611	Front fender—right assembly (with well)	..	..	..	1	..	..
191275	Front fender—right assembly (with well) prior to frame No. 193788)	..	..	..	..	..	1
173914	Front fender—right assembly (with well) (used on 745)	..	1	..	..	..	..
176747	Front fender—right assembly, fender well) (used on 745 custom)	..	1	..	..	..	..
175152	Front fender—right assembly, (without well) (used on 745)	..	1	..	..	..	..
174056	Front fender—left assembly (without well) (used on 740)	..	1	..	..	..	..
180602	Front fender—left assembly (without well)	..	..	..	1	..	..
190359	Front fender—left assembly (without well)	..	..	..	..	..	1
170880	Front fender—left assembly (without well)	1	..	..	..	..	..
180596	Front fender—left assembly (without well)	..	..	1	..	..	..
186913	Front fender—left assembly (without well)	..	..	..	..	1	..
171551	Front fender—left assembly (with well) (used on 726-733-740)	1	1	..	..	..	..
180606	Front fender—left assembly (with well)	..	..	1	..	..	..
191274	Front fender—left assembly (with well) (prior to frame No. 344176)	..	..	..	..	1	..
194695	Front fender—left assembly (with well) (after frame No. 344175 for 901-2 and 193787 for 903-4)	..	..	..	..	1	1
173915	Front fender—left assembly (with well) (used on 745)	..	1	..	..	..	..
180610	Front fender—left assembly (with well)	..	..	..	1	..	..
191276	Front fender—left assembly (with well) (prior to frame No. 193788)	..	..	..	..	..	1
176748	Front fender—left assembly (with well) (used on 745 custom)	..	1	..	..	..	..
175153	Front fender—left assembly (without well) (used on 745)	..	1	..	..	..	..
170941	Front fender bracket—right assembly	1	1	..	..	..	..
184326	Front fender bracket—right	..	..	1	1	..	..
191136	Front fender bracket—right	..	..	..	..	1	1
170940	Front fender bracket—left assembly	1	1	..	..	..	..
184325	Front fender bracket—left	..	..	1	1	..	..
191135	Front fender bracket—left	..	..	..	..	1	1
170891	Front fender to battery box reinforcement	1	..	..	..	..	..
180942	Front fender to battery box reinforcement	..	..	1	..	..	..
173930	Front fender to battery box reinforcement (used on 745)	..	1	..	..	..	..
173930	Front fender to battery box reinforcement—front	..	..	..	1	..	..
176927	Front fender to battery box reinforcement—side (used on 745) (use with rear wheel carrier)	..	1	..	..	..	..
179320	Front fender to battery box reinforcement—rear	..	..	..	1	..	..
170892	Front fender to battery box reinforcement (used on 740)	..	1	..	..	..	..
7864	Front fender to bracket bolt screw ($\frac{7}{16}$" - 24 x $2\frac{1}{4}$" hex. hd. mach.)	2	2	2	2	2	2
5241	Front fender to battery box screw ($\frac{1}{4}$" - 28 x $\frac{3}{4}$" O. H.) (use with side wheel carrier)	3	..	..	3	..	..
7827	Front fender to battery box screw ($\frac{1}{4}$" - 28 x $\frac{3}{4}$" hex. hd.) (use with side wheel carrier)	..	..	..	..	1	1

Piece No.	Name	No. Required 726 733	740 745	826 833	840 845	901 902	903 904
7005	Nut ($\frac{5}{16}$"—24 plain)	2	2	2	2	2	2
3874	Washer ($\frac{5}{16}$" plain)	2	2	2	2	2	2
5504	Lockwasher ($\frac{5}{16}$")	2	2	2	2	2	2
7861	Front fender bracket to frame bolt (screw $\frac{5}{16}$—24 x 1" hex. hd.)	8	8	..	..	..	..
7809	Front fender bracket to frame bolt (screw $\frac{5}{16}$—24 x $\frac{7}{8}$" hex. hd.)	..	..	8	8	8	8
5504	Lockwasher ($\frac{5}{16}$")	8	8	8	8	8	8
7005	Nut ($\frac{5}{16}$"—24 plain)	8	8	8	8	8	8
7800	Front fender to frame bolt ($\frac{1}{4}$—28 x 1" hex. hd.)	14	16	14	16	..	..
7800	Front fender to frame bolt—long ($\frac{1}{4}$—28 x 1" hex. hd.)	..	..	..	..	12	12
7827	Front fender to frame bolt—short ($\frac{1}{4}$—28 x $\frac{3}{4}$" hex. hd.)	..	..	..	..	2	2
5502	Lockwasher ($\frac{1}{4}$")	14	16	14	16	14	14
7004	Nut ($\frac{1}{4}$"—28 plain) (used on 740)	12	14	12	14	12	12
62065	Washer ($\frac{17}{64}$ x $\frac{3}{4}$" plain) (used on 740)	14	16	14	16	14	14
96984	Front fender to frame liner	x	x	x	x	..	..
191124	Front fender to frame liner	..	..	..	..	2	2
183951	Front fender protector moulding	..	..	..	10	..	..
5840	Screw (No. 10—24 x $\frac{3}{16}$" fill. head mach.)	..	..	..	20	..	..
5500	Lockwasher (No. 10)	..	..	..	20	..	..
183962	Front fender protector moulding screw cup washer	..	..	..	20	..	..
5412	Front fender to running board bolt ($\frac{5}{16}$—24 x 1" carriage)	6	6	6	6	6	6
5504	Lockwasher ($\frac{5}{16}$")	6	6	6	6	6	6
7005	Nut ($\frac{5}{16}$"—24 plain)	6	6	6	6	6	6
7827	Front fender to running board to frame splasher bolt ($\frac{1}{4}$—28 x $\frac{3}{4}$" hex. hd. mach.)	7	10	7	10	8	8
5502	Lockwasher ($\frac{1}{4}$")	7	10	7	10	8	8
7004	Nut ($\frac{1}{4}$"—28 plain)	7	10	7	10	8	8
62065	Washer ($\frac{17}{64}$ x $\frac{3}{4}$" plain)	14	20	14	20	16	16
96984	Front fender to running board liner	x	x	x	x	x	x
96985	Front fender to running board to frame splasher liner	x	x	x	x	..	..
174168	Rear fender—right assembly (used on body models 400-410)	1	1	..	..	..	..
175407	Rear fender—right assembly (used on body model 420) (specify color)	..	1	..	..	..	..
174226	Rear fender—right assembly (used on body models 401-411-431-441)	1	1	..	..	..	..
175409	Rear fender—right assembly (used on body models 421-451) (specify color)	..	1	..	..	..	..
174533	Rear fender—right assembly (used on body models 402-412)	1	1	..	..	..	..
175411	Rear fender—right assembly (used on body model 422) (specify color)	..	1	..	..	..	..
171506	Rear fender—right assembly (used on body models 403-404-414-405-415)	1	1	..	..	..	..
175413	Rear fender—right assembly (used on body model 413)	..	1	..	..	..	..
175415	Rear fender—right assembly (used on body model 423) (specify color)	..	1	..	..	..	..
175417	Rear fender—right assembly (used on body models 424-425) (specify color)	..	1	..	..	..	..
172109	Rear fender—right assembly (used on body models 406-416)	1	1	..	..	..	..
175419	Rear fender—right assembly (used on body model 426) (specify color)	..	1	..	..	..	..
172270	Rear fender—right assembly (used on body models 407-417-408-418-409-419)	1	1	..	..	..	..
175421	Rear fender—right assembly (used on body models 427-428-429) (specify color)	..	1	..	..	..	..
180849	Rear fender—right assembly (used on body model 470)	..	..	..	1	..	..
180731	Rear fender—right assembly (used on body model 460)	..	..	1	..	..	..
180851	Rear fender—right assembly (used on body models 471-491)	..	..	..	1	..	..
180733	Rear fender—right assembly (used on body models 461-481)	..	..	1	..	..	..
180853	Rear fender—right assembly (used on body model 472)	..	..	..	1	..	..
180735	Rear fender—right assembly (used on body model 462)	..	..	1	..	..	..
180721	Rear fender—right assembly (used on body models 463-464-465)	..	..	1	..	..	..
180725	Rear fender—right assembly (used on body model 473-493-3004-3008-3009)	..	..	1	1	..	..
180727	Rear fender—right assembly (used on body models 474-475-3000-3001-3002-3003)	..	..	..	1	..	..
185122	Rear fender—right assembly (used on body model 483)	..	..	1	..	..	..
180857	Rear fender—right assembly (used on body model 476)	..	..	..	1	..	..
180723	Rear fender—right assembly (used on body model 466)	..	..	1	..	..	..
180855	Rear fender—right assembly (used on body models 477-478-479)	..	..	..	1	..	..
180729	Rear fender—right assembly (used on body models 467-468-469)	..	..	1	..	..	..
187642	Rear fender—right assembly (500-510)	..	..	..	..	1	1
187644	Rear fender—right assembly (501-511-521-531)	..	..	..	..	1	1

packardinfo.com

Piece No.	Name	No. Required 726 733	740 745	826 833	840 845	901 902	903 904
187076	Rear fender—right assembly (503-504-514-505-515-4000-4001-4002-4003-4006)					1	1
187102	Rear fender—right assembly (513-543-523-533-4004-4007-4008-4009)					1	1
193922	Rear fender—right assembly (527-537)					1	1
187159	Rear fender—right assembly (506-516-4005)					1	1
187589	Rear fender—right assembly (507-517-508-518-509-519)					1	1
187643	Rear fender—left assembly (500-510)					1	1
187645	Rear fender—left assembly (501-511-521-531)					1	1
187077	Rear fender—left assembly (503-504-514-505-515-4000-4001-4002-4003-4006)					1	1
187103	Rear fender—left assembly (513-543-523-533-4004-4007-4008-4009)					1	1
193923	Rear fender—left assembly (527-537)					1	1
187160	Rear fender—left assembly (506-516-4005)					1	1
187590	Rear fender—left assembly (507-517-508-518-509-519)					1	1
180850	Rear fender—left assembly (used on body model 470)				1		
180730	Rear fender—left assembly (used on body model 460)			1			
180852	Rear fender—left assembly (used on body model 471-491)				1		
180732	Rear fender—left assembly (used on body models 461-481)			1			
180854	Rear fender—left assembly (used on body model 472)				1		
180734	Rear fender—left assembly (used on body model 462)			1			
180720	Rear fender—left assembly (used on body models 463-464-465)			1			
180724	Rear fender—left assembly (used on body model 473-493-3004-3008-3009)			1	1		
180726	Rear fender—left assembly (used on body models 474-475-3000-3001-3002-3003)			1	1		
185123	Rear fender—left assembly (used on body model 483)			1			
180858	Rear fender—left assembly (used on body model 476)				1		
180722	Rear fender—left assembly (used on body model 466)			1			
180856	Rear fender—left assembly (used on body models 477-478-479)				1		
180728	Rear fender—left assembly (used on body models 467-468-469)			1			
175414	Rear fender—left assembly (used on body model 423) (specify color)		1				
175416	Rear fender—left assembly (used on body models 424-425) (specify color)		1				
172110	Rear fender—left assembly (used on body models 406-416)	1	1				
175418	Rear fender—left assembly (used on body model 426) (specify color)		1				
172271	Rear fender—left assembly (used on body models 407-408-409-417-418-419)	1	1				
175420	Rear fender—left assembly (used on body models 427-428-429) (specify color)		1				
174169	Rear fender—left assembly (used on body models 400-410)	1	1				
175406	Rear fender—left assembly (used on body model 420) (specify color)		1				
174227	Rear fender—left assembly (used on body models 401-411-431-441)	1	1				
175408	Rear fender—left assembly (used on body models 421-451) (specify color)		1				
174534	Rear fender—left assembly (used on body models 402-412)	1	1				
175410	Rear fender—left assembly (used on body model 422) (specify color)		1				
171507	Rear fender—left assembly (used on body models 403-404-414-405-415)	1	1				
175412	Rear fender—left assembly (used on body model 413)		1				
176760	Rear fender to body liner (bulk) (body models 420-424-425) (specify color)		x				
148957	Rear fender to body liner (bulk)	x	x	x	x	x	x
7809	Rear fender to body screw ($\frac{5}{16}$—24 x $\frac{7}{8}$" hex. hd. mach.)	x	x	x	x	x	x
5381	Rear fender to body screw ($\frac{5}{16}$—24 x $\frac{7}{8}$" rnd. hd.)	x	x	x	x	x	x
7861	Rear fender to body screw ($\frac{1}{4}$—28 x 1" hex. hd.)			x	x	x	x
5504	Lockwasher ($\frac{5}{16}$") std.	x	x	x	x	x	x
5385	Lockwasher ($\frac{5}{16}$") (shakeproof)	x	x	x	x	x	x
162389	Rear fender to body bolt washer	x	x	x	x	x	x
5681	Washer ($\frac{5}{16}$") plain	x	x				
3909	Washer ($\frac{5}{16}$")	x	x	x	x	x	x
7827	Rear fender to frame rear end splasher screw ($\frac{1}{4}$—28 x $\frac{3}{4}$" hex. hd. mach.) (used on 745-840)		8		8	8	8
62065	Washer ($\frac{17}{64}$ x $\frac{3}{4}$" plain) (used on 745-840)		12		12	12	12
5502	Lockwasher ($\frac{1}{4}$") (used on 745-840)		8		8	8	8
7004	Nut ($\frac{1}{4}$"—28 plain) (used on 840)		8		8	8	8
187580	Rear fender to running board liner—right					1	1
187581	Rear fender to running board liner—left					1	1
182211	Rear fender to running board and splasher liner—left			1	1		
187582	Rear fender to running board and splasher liner—left					1	1

Piece No.	Name	No. Required 726 733	740 745	826 833	840 845	901 902	903 904
175244	Rear fender to running board and splasher liner	2	2	..	..	..	..
182212	Rear fender to running board and splasher liner—right	..	..	1	1	..	..
187583	Rear fender to running board and splasher liner—right	..	..	..	..	1	1
5412	Bolt ($\frac{5}{16}$—24 x 1" carriage)	6	6	6	6	6	6
5504	Lockwasher ($\frac{5}{16}$" std.)	6	6	6	6	6	6
7005	Nut ($\frac{5}{16}$"—24 plain std.)	6	6	6	6	6	6
7827	Screw ($\frac{1}{4}$—28 x $\frac{3}{4}$" hex. hd. mach.)	4	4	4	4	4	4
7852	Screw ($\frac{1}{4}$—28 x $\frac{7}{8}$" hex. hd.)	2	2	2	2	2	2
62065	Washer ($\frac{17}{64}$ x $\frac{3}{4}$" plain)	12	12	12	12	12	12
5502	Lockwasher ($\frac{1}{4}$" std.)	6	6	6	6	6	6
7004	Nut ($\frac{1}{4}$"—28 plain std.)	6	6	6	6	6	6
170843	Running board right assembly (used on 726)	1	..	..	..	..	..
185007	Running board right assembly (used on 826) (with mat No. 185003—see illus.)	..	..	1	..	..	..
180920	Running board right assembly (used on 826) (with mat No. 181358—see illus.)	..	..	1	..	..	..
190297	Running board right assembly (used on 901)	..	..	..	..	1	..
170845	Running board right assembly (used on 733)	1	..	..	..	..	..
185005	Running board right assembly (used on 833) (with mat No. 185001—see illus.)	..	..	1	..	..	..
180922	Running board right assembly (used on 833) (with mat No. 181356—see illus.)	..	..	1	..	..	..
190295	Running board right assembly (used on 902)	..	..	..	..	1	..
170850	Running board right assembly (used on 740)	..	1	..	..	..	..
181208	Running board right assembly (used on 840) (complete)	..	..	..	1	..	..
190301	Running board right assembly (used on 903) (complete)	..	..	..	..	..	1
174422	Running board right assembly (used on 745)	..	1	..	..	..	..
181210	Running board right assembly (used on 845) (complete)	..	..	..	1	..	..
190299	Running board right assembly (used on 904) (complete)	..	..	..	..	..	1
175728	Running board right assembly (used on 745 custom)	..	1	..	..	..	..
170842	Running board left assembly (used on 726)	1	..	..	..	..	..
185006	Running board left assembly (used on 826) (with mat No. 185002—see illus.)	..	..	1	..	..	..
180921	Running board left assembly (used on 826) (with mat No. 181357—see illus.)	..	..	1	..	..	..
190296	Running board left assembly (used on 901)	..	..	..	..	1	..
170844	Running board left assembly (used on 733)	1	..	..	..	..	..
185004	Running board left assembly (used on 833) (with mat No. 185000—see illus.)	..	..	1	..	..	..
180923	Running board left assembly (used on 833) (with mat No. 181355—see illus.)	..	..	..	..	1	..
190294	Running board left assembly (used on 902)	..	..	..	..	1	..

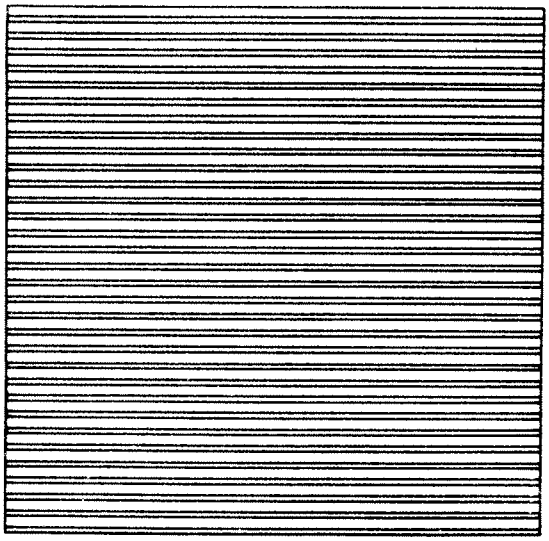

TYPE OF CORK CARPET USED IN RUNNING BOARD MAT NOS. 181355-181356-181357-181358

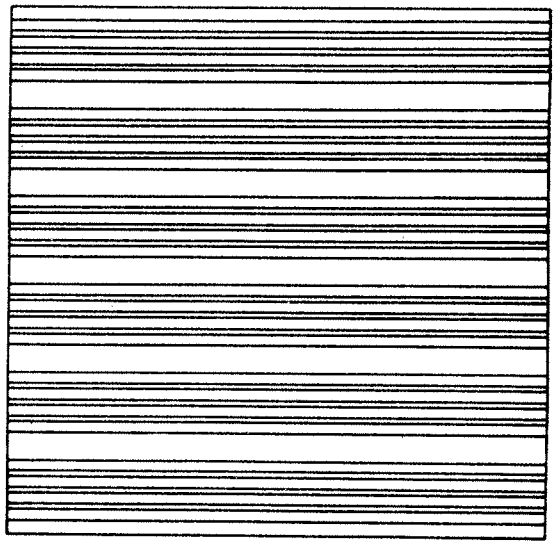

TYPE OF CORK CARPET USED IN RUNNING BOARD MAT NOS. 185000-185001-185002-185003

Printed in U. S. A.

Piece No.	Name	No. Required 726 733	740 745	826 833	840 845	901 902	903 904
170849	Running board left assembly (used on 740)	..	1	..	..	..	..
181207	Running board left assembly (used on 840)	..	..	..	1	..	..
190300	Running board left assembly (used on 903)	..	..	..	..	..	1
174421	Running board left assembly (used on 745)	..	1	..	..	..	..
181209	Running board left assembly (used on 845)	..	..	..	1	..	..
190298	Running board left assembly (used on 904)	..	..	..	..	..	1
175727	Running board assembly—left (used on 745 custom)	..	1	..	..	..	..
182251	Running board and mat assembly—right (used on 840) (without mouldings)	..	..	..	1	..	..
182249	Running board and mat assembly—right (used on 845) (without mouldings)	..	..	..	1	..	..
190317	Running board and mat assembly—right (used on 903) (without mouldings)	..	..	..	..	..	1
190318	Running board and mat assembly—right (used on 904) (without mouldings)	..	..	..	..	..	1
182250	Running board and mat assembly—left (used on 840) (without mouldings)	..	..	..	1	..	..
182248	Running board and mat assembly—left (used on 845) (without mouldings)	..	..	..	1	..	..
190319	Running board and mat assembly—left (used on 903) (without mouldings)	..	..	..	..	..	1
190320	Running board and mat assembly—left (used on 904) (without mouldings)	..	..	..	..	..	1
145716	Running board bracket	6	8	6	8	..	..
186963	Running board bracket	..	..	..	..	4	4
7806	Running board bracket screw ($\frac{5}{16}$—24 x $\frac{3}{4}$" hex. hd.) (used on 726)	4	..	..	..	..	..
7005	Nut ($\frac{5}{16}$"—24 plain) (used on 726)	4	..	..	..	..	..
5504	Lockwasher ($\frac{5}{16}$") (used on 726)	4	..	..	..	..	..
4175	Rivet ($\frac{5}{16}$ x $\frac{7}{8}$" rnd. hd.)	24	32	24	24	24	16
4176	Rivet ($\frac{5}{16}$ x 1" rnd. hd.)	..	..	..	..	4	8
7600	Running board to bracket bolt ($\frac{5}{16}$ x $\frac{7}{8}$" carriage)	12	16	12	12	12	12
5504	Lockwasher ($\frac{5}{16}$")	12	16	12	12	12	12
7005	Nut ($\frac{5}{16}$"—24 plain)	12	16	12	12	12	12
3874	Washer ($\frac{5}{16}$" plain)	12	16	12	12	12	12
170866	Running board to frame splasher left assembly (used on 726)	1	..	..	..	..	..
181851	Running board to frame splasher left assembly (used on 826)	..	..	1	..	..	..
191129	Running board to frame splasher left assembly (used on 901)	..	..	..	..	1	..
171977	Running board to frame splasher left assembly (used on 726) (use with side wheel carrier)	1	..	..	..	..	..
181800	Running board to frame splasher left assembly (use with side wheel carrier) (826)	..	..	1	..	..	..
191628	Running board to frame splasher left assembly (use with side wheel carrier) (901)	..	..	..	..	1	..
170867	Running board to frame splasher left assembly (used on 733)	1	..	..	..	..	..
181850	Running board to frame splasher left assembly (used on 833)	..	..	1	..	..	..
191125	Running board to frame splasher left assembly (used on 902)	..	..	..	..	1	..
171978	Running board to frame splasher left assembly (used on 733) (use with side wheel carrier)	1	..	..	..	..	..
181804	Running board to frame splasher left assembly (use with side wheel carrier) (833)	..	..	1	..	..	..
191624	Running board to frame splasher left assembly (use with side wheel carrier) (902)	..	..	..	..	1	..
170868	Running board to frame splasher left assembly (used on 740)	..	1	..	..	..	..
181776	Running board to frame splasher left assembly (used on 840)	..	..	..	1	..	..
190934	Running board to frame splasher left assembly (used on 903)	..	..	..	..	..	1
171979	Running board to frame splasher left assembly (used on 740) (use with side wheel carrier)	..	1	..	..	..	..
181430	Running board to frame splasher left assembly (used on 840) (use with side wheel carrier)	..	..	..	1	..	..
191608	Running board to frame splasher left assembly (use with side wheel carrier) (903)	..	..	..	..	..	1
176943	Running board to frame splasher left assembly (used on 745 custom) (specify color)	..	1	..	..	..	..
181434	Running board to frame splasher left assembly (used on 845) (use with side wheel carrier)	..	..	..	1	..	..
191604	Running board to frame splasher left assembly (use with side wheel carrier) (904)	..	..	..	..	..	1
174424	Running board to frame splasher left assembly (used on 745) (specify color)	..	1	..	..	..	..
181778	Running board to frame splasher left assembly (used on 845)	..	..	..	1	..	..
190930	Running board to frame splasher left assembly (used on 904)	..	..	..	..	..	1
175157	Running board to frame splasher left assembly (used on 745) (use with double or single wheel carrier) (specify color)	..	1	..	..	..	..
176944	Running board to frame splasher left assembly (used on 745 custom) (use with double or single wheel carrier) (specify color)	..	1	..	..	..	..

packardinfo.com

Piece No.	Name	No. Required 726 733	740 745	826 833	840 845	901 902	903 904
170869	Running board to frame splasher right assembly (used on 726)	1	..	..	..	..	..
181854	Running board to frame splasher right assembly (used on 826)	..	..	1	..	..	..
191131	Running board to frame splasher right assembly (used on 901)	..	..	..	..	1	..
171983	Running board to frame splasher right assembly (used on 726) (use with side wheel carrier)	1	..	..	..	..	..
181802	Running board to frame splasher right assembly (used on 826) (use with side wheel carrier)	..	..	1	..	..	..
191630	Running board to frame splasher right assembly (use with side wheel carrier) (901)	..	..	..	..	1	..
170870	Running board to frame splasher right assembly (used on 733)	1	..	..	..	..	..
181855	Running board to frame splasher right assembly (used on 833)	..	..	1	..	..	..
191127	Running board to frame splasher right assembly (used on 902)	..	..	..	..	1	..
171984	Running board to frame splasher right assembly (used on 733) (use with side wheel carrier)	1	..	..	..	..	..
181806	Running board to frame splasher right assembly (used on 833) (use with side wheel carrier)	..	..	1	..	..	..
191626	Running board to frame splasher right assembly (use with side wheel carrier) (902)	..	..	..	..	1	..
170871	Running board to frame splasher right assembly (used on 740)	..	1	..	..	..	..
181785	Running board to frame splasher right assembly (used on 840)	..	..	..	1	..	..
190936	Running board to frame splasher right assembly (used on 903)	..	..	..	..	..	1
171985	Running board to frame splasher right assembly (used on 740) (use with side wheel carrier)	..	1	..	..	..	..
181432	Running board to frame splasher right assembly (used on 840) (use with side wheel carrier)	..	..	..	1	..	..
191610	Running board to frame splasher right assembly (used with side wheel carrier) (903)	..	..	..	..	..	1
174425	Running board to frame splasher right assembly (used on 745) (specify color)	..	1	..	..	..	..
181787	Running board to frame splasher right assembly (used on 845)	..	..	..	1	..	..
190932	Running board to frame splasher right assembly (used on 904)	..	..	..	..	..	1
176947	Running board to frame splasher right assembly (used on 745 custom) (specify color)	..	1	..	..	..	..
181436	Running board to frame splasher right assembly (used on 845) (use with side wheel carrier)	..	..	..	1	..	..
191606	Running board to frame splasher right assembly (use with side wheel carrier) (904)	..	..	..	1	..	..
175158	Running board to frame splasher right assembly (used on 745) (use with double or single wheel carrier) (specify color)	..	1	..	..	..	..
176948	Running board to frame splasher right assembly (used on 745 custom) (use with double or single wheel carrier)	..	1	..	..	..	..
190246	Running board to frame splasher bolt hole cover	..	..	..	..	2	2
7852	Running board to frame splasher to frame bolt (¼—28 x ⅜" hex. hd.)	5	5	5	5	2	4
5317	Running board to frame splasher to frame bolt (¼—28 x 1 1/8" hex. hd.)	2	2	..	..	..	..
7859	Running board to frame splasher to frame bolt (¼—28 x 1½" hex. hd.)	..	..	2	2	..	..
5502	Lockwasher (¼")	7	7	7	7	2	4
7004	Nut (¼"—28 plain)	7	7	7	7	2	4
62065	Washer (17/64 x ¾" plain)	7	7	7	7	2	4
194774	Rivet (5/32 x 7/16" split No. 259)	..	..	..	..	2	..
122830	Running board to frame splasher to frame liner (in rolls)	x	x	..	..	..	..
96984	Running board to frame splasher to frame liner (in rolls)	..	..	x	x	..	..
133478	Running board to frame splasher to frame spacer	2	2	6	6	..	..
115478	Running board to frame splasher liner front	1	1	1	1	..	..
46527	Rivet (9/64 x ¼" tubular)	2	2	2	2	..	..
143495	Running board to frame splasher to running board liner (in rolls)	x	..	..	..	..	..
96985	Running board to frame splasher to running board liner (in rolls)	..	..	x	x	..	..
96984	Running board to frame splasher to running board liner (used on 740)	..	x	..	..	..	..
143495	Running board to frame splasher to running board liner (used on 745)	..	x	..	..	..	..
7827	Running board to frame splasher to running board screw (¼—28 x ¾" hex. hd.)	x	x	x	x	18	22
5502	Lockwasher (¼")	x	x	x	x	18	22
7004	Nut (¼"—28 plain)	x	x	x	x	18	22

packardinfo.com

Printed in U. S. A.

Piece No.	Name	No. Required 726 733	740 745	826 833	840 845	901 902	903 904
62065	Washer ($\frac{17}{64}$ x $\frac{3}{4}$" plain)	x	x	x	x	18	22
181355	Running board mat—left (used on 833) (See Cut Page No. 41)			1			
190311	Running board mat—left (used on 902)					1	
181356	Running board mat—right (used on 833) (See Cut Page No. 41)			1			
190312	Running board mat—right (used on 902)					1	
181357	Running board mat—left (used on 826) (See Cut Page No. 41)			1			
190313	Running board mat—left (used on 901)					1	
185002	Running board mat—left (used on 826) (See Cut Page No. 41)			1			
185003	Running board mat—right (used on 826) (See Cut Page No. 41)			1			
185001	Running board mat—right (used on 833) (See Cut Page No. 41)			1			
185000	Running board mat—left (used on 833) (See Cut Page No. 41)			1			
181358	Running board mat—right (used on 826) (See Cut Page No. 41)			1			
190314	Running board mat—right (used on 901)					1	
145324	Running board mat (in rolls) (gray corrugated) (used on 733)	x	x				
117607	Running board mat (in rolls) (black—plain) (used on 726)	x					
143496	Running board moulding—front (aluminum) (6' lengths)	x					
148801	Running board moulding—front (6' lengths)		x				
181812	Running board moulding—front—right			1			
194223	Running board moulding—front—right					1	1
181810	Running board moulding—front—right				1		
181235	Running board moulding—front—left				1		
194224	Running board moulding—front—left					1	1
181811	Running board moulding—front—left			1			
181808	Running board moulding—rear—left			1			
194220	Running board moulding—rear—left					1	1
181809	Running board moulding—rear—right			1			
194221	Running board moulding—rear—right					1	1
181232	Running board moulding—rear—right (used on 845)				1		
181234	Running board moulding—rear—right (used on 840)				1		
181231	Running board moulding—rear—left (used on 845)				1		
181233	Running board moulding—rear—left (used on 840)				1		
170832	Running board moulding—rear—left	1					
170833	Running board moulding—rear—right	1					
170834	Running board moulding—rear—left		1				
170835	Running board moulding—rear—right		1				
8212	Running board moulding front and rear screw (No. 10—32 x $\frac{7}{16}$" flat hd.)	8	8	8	8	8	8
5500	Lockwasher ($\frac{3}{16}$")	8	8	8	8	8	8
7003	Nut (No. 10—32 plain)	8	8	8	8	8	8
181224	Running board moulding—inboard—left (used on 826)			1			
194225	Running board moulding—inboard—left (used on 901)					1	
181226	Running board moulding—inboard—left (used on 833)			1			
194227	Running board moulding—inboard—left (used on 902)					1	
181228	Running board moulding—inboard—left (used on 840)				1		
194229	Running board moulding—inboard—left (used on 903)						1
181230	Running board moulding—inboard—left (used on 845)				1		
194231	Running board moulding—inboard—left (used on 904)						1
181223	Running board moulding—inboard—right (used on 826)			1			
194226	Running board moulding—inboard—right (used on 901)					1	
181225	Running board moulding—inboard—right (used on 833)			1			
194228	Running board moulding—inboard—right (used on 902)					1	
181229	Running board moulding—inboard—right (used on 845)				1		
194232	Running board moulding—inboard—right (used on 904)						1
181227	Running board moulding—inboard—right (used on 840)				1		
194230	Running board moulding—inboard—right (used on 903)						1
143496	Running board moulding—inboard (aluminum) (6' lengths)	x					
148801	Running board moulding—inboard (brass) (6' lengths)		x				
77082	Running board moulding—inboard rivet	x	x	x	x	x	x
170748	Running board moulding—outboard assembly—left (used on 726)	1					
170749	Running board moulding—outboard assembly—left (used on 733)	1					
174108	Running board moulding—outboard assembly—left (used on 745)		1				

Piece No.	Name	No. Required 726 733	740 745	826 833	840 845	901 902	903 904
170830	Running board moulding—outboard assembly—left (used on 740)	..	1	..	..	..	..
170838	Running board moulding—outboard assembly—right (used on 726)	1	..	..	..	..	..
170839	Running board moulding—outboard assembly—right (used on 733)	1	..	..	..	..	..
174109	Running board moulding—outboard assembly—right (used on 745)	..	1	..	..	..	..
170840	Running board moulding—outboard assembly—right (used on 740)	..	1	..	..	..	..
181236	Running board moulding—outboard—left (used on 826)	..	..	1	..	..	..
194265	Running board moulding—outboard—left (used on 901)	..	..	..	..	1	..
181238	Running board moulding—outboard—left (used on 833)	..	..	1	..	..	..
194266	Running board moulding—outboard—left (used on 902)	..	..	..	..	1	..
181240	Running board moulding—outboard—left (used on 840)	..	..	..	1	..	..
190827	Running board moulding—outboard—left (used on 903)	..	..	..	..	..	1
181242	Running board moulding—outboard—left (used on 845)	..	..	..	1	..	..
190828	Running board moulding—outboard—left (used on 904)	..	..	..	..	..	1
181237	Running board moulding—outboard—right (used on 826)	..	..	1	..	..	..
194267	Running board moulding—outboard—right (used on 901)	..	..	..	..	1	..
181239	Running board moulding—outboard—right (used on 833)	..	..	1	..	..	..
194268	Running board moulding—outboard—right (used on 902)	..	..	..	..	1	..
181241	Running board moulding—outboard—right (used on 840)	..	..	..	1	..	..
190829	Running board moulding—outboard—right (used on 903)	..	..	..	..	..	1
181243	Running board moulding—outboard—right (used on 845)	..	..	..	1	..	..
190830	Running board moulding—outboard—right (used on 904)	..	..	..	..	..	1
7004	Running board moulding—outboard—bolt nut ($\frac{1}{4}$"—28 plain)	14	14	..	..	..	..
5502	Lockwasher ($\frac{1}{4}$")	14	14	..	..	..	..
5308	Bolt ($\frac{1}{4}$—28 x $\frac{1}{2}$" special)	..	..	12	14	12	14
7004	Nut ($\frac{1}{4}$"—28 plain)	..	..	12	14	12	14
5502	Lockwasher ($\frac{1}{4}$")	..	..	12	14	12	14
182201	Running board tread strip (used on 840)	..	..	..	10	..	..
190802	Running board tread strip (used on 903)	..	..	..	..	..	8
182202	Running board tread strip (used on 845)	..	..	..	10	..	..
190803	Running board tread strip (used on 904)	..	..	..	..	..	8
182252	Running board tread tip	..	..	..	20	..	16
7729	Screw (No. 10—32 x $\frac{11}{32}$" fill. hd.)	..	..	..	20	..	..
183466	Running board trim strip assembly (used on 840)	..	..	..	10	..	..
190093	Running board trim strip assembly (used on 903)	..	..	..	..	..	8
183467	Running board trim strip assembly (used on 845)	..	..	..	10	..	..
190094	Running board trim strip assembly (used on 904)	..	..	..	..	..	8
5500	Running board tread tip screw lockwasher (No. 10 std.)	..	..	..	20	..	16

FRAME

170238	Frame assembly (used on 726)	1	..	..	..	..	..
180765	Frame assembly (used on 826)	..	..	1	..	..	..
191221	Frame assembly (used on 901)	..	..	..	..	1	..
170195	Frame assembly (used on 733)	1	..	..	..	..	..
180766	Frame assembly (used on 833)	..	..	1	..	..	..
190789	Frame assembly (used on 902)	..	..	..	..	1	..
170239	Frame assembly (used on 740)	..	1	..	..	..	..
180767	Frame assembly (used on 840)	..	..	..	1	..	..
190790	Frame assembly (used on 903)	..	..	..	..	..	1
175177	Frame assembly (used on 745)	..	1	..	..	..	..
180768	Frame assembly (used on 845)	..	..	..	1	..	..
191197	Frame assembly (used on 904)	..	..	..	..	..	1
175536	Frame assembly (used on 745 custom)	..	1	..	..	..	..
133108	Frame to body hold down bolt bracket (used on 733)	2	2	..	..	..	..
181425	Frame to body hold down bolt bracket	..	..	6	6	..	..
186737	Frame to body hold down bolt bracket	..	..	..	..	6	6
167444	Frame body bolt spacer (used on 745)	..	2	..	..	..	..
177932	Frame body bolt spacer	..	..	2	2	..	..

packardinfo.com

Piece No.	Name	No. Required 726 733	740 745	826 833	840 845	901 902	903 904
186739	Frame body bolt spacer	..	..	..	..	2	2
121710	Frame—brake lever reinforcement	1	1	..	..	..	..
170114	Frame front channel	1	..	1	..	..	..
170237	Frame front channel	..	1	..	1	..	..
190804	Frame front channel assembly	..	..	..	..	1	1
148639	Frame front end cross tube assembly (used on 726-840-845)	1	..	..	1	..	..
180573	Frame front end cross tube assembly (used on 826)	..	..	1	..	..	..
190341	Frame front end cross tube assembly (used on 901)	..	..	..	..	1	..
148638	Frame front end cross tube assembly (used on 733)	1	..	..	..	..	..
180572	Frame front end cross tube assembly (used on 833)	..	..	1	..	..	..
186888	Frame front end cross tube assembly (used on 902-903)	..	..	..	..	1	1
148662	Frame front end cross tube assembly	..	1	..	..	..	..
190342	Frame front end cross tube assembly (used on 904)	..	..	..	..	..	1
170162	Frame front intermediate channel (used on 726)	1	..	..	..	..	..
183056	Frame front intermediate channel (used on 826)	..	..	1	..	..	..
191695	Frame front intermediate channel assembly (used on 901)	..	..	..	..	1	..
175184	Frame front intermediate channel (used on 745)	..	1	..	..	..	..
186892	Frame front intermediate channel assembly (used on 902)	..	..	..	..	1	..
183054	Frame front intermediate channel (used on 833 and 845)	..	..	1	1	..	..
186893	Frame front intermediate channel assembly (used on 903)	..	..	..	..	..	1
170115	Frame front intermediate channel (used on 733 and 745 custom)	1	..	..	..	..	..
190349	Frame front intermediate channel assembly (used on 904)	..	..	..	..	..	1
170163	Frame front intermediate channel (used on 740)	..	1	..	..	..	..
183055	Frame front intermediate channel (used on 840)	..	..	..	1	..	..
158443	Frame front intermediate channel reinforcement	1	1	1	1	..	..
7872	Bolt ($\frac{3}{8}$—24 x $\frac{3}{4}$" hex. hd.)	8	8	8	8	..	..
5506	Lockwasher ($\frac{3}{8}$")	8	8	8	8	..	..
7006	Nut ($\frac{3}{8}$"—24)	8	8	8	8	..	..
170131	Frame rear channel	1	..	..	..	..	..
190345	Frame rear channel (used on 901)	..	..	..	..	1	..
180584	Frame rear channel	..	..	1	1	..	..
186704	Frame rear channel (used on 902-903)	..	..	..	..	1	1
175503	Frame rear channel (used on 740)	..	1	..	..	..	..
175502	Frame rear channel (used on 745)	..	1	..	..	..	..
190346	Frame rear channel (used on 904)	..	..	..	..	..	1
170232	Frame rear end cross tube assembly (used on 726)	1	..	..	..	..	..
180569	Frame rear end cross tube assembly (used on 826)	..	..	1	..	..	..
170122	Frame rear end cross tube assembly (used on 733)	1	..	..	..	..	..
180568	Frame rear end cross tube assembly (used on 833)	..	..	1	..	..	..
170233	Frame rear end cross tube assembly (used on 740)	..	1	..	..	..	..
180570	Frame rear end cross tube assembly (used on 840)	..	..	..	1	..	..
158338	Frame rear end cross tube assembly (used on 745)	..	1	..	..	..	..
180571	Frame rear end cross tube assembly (used on 845)	..	..	..	1	..	..
170123	Frame rear end cross tube to gasoline tank support (used on 740)	1	1	..	..	..	..
158339	Frame rear end cross tube to gasoline tank support (used on 745)	..	1	..	..	..	..
180574	Frame rear end cross tube to gasoline tank support	..	..	1	1	..	..
174065	Frame rear end splasher assembly (used on 745) (specify color)	..	1	..	..	..	..
174066	Frame rear end splasher assembly (used on 745) (used on double or single wheel carrier) (specify color)	..	1	..	..	..	..
176957	Frame rear end splasher assembly (used on 726-733-740) (single wheel carrier)	1	1	1	..	..	..
191213	Frame rear end splasher assembly (single wheel carrier)	..	..	..	..	1	..
181065	Frame rear end splasher assembly	..	..	..	1	..	..
191209	Frame rear end splasher assembly (single wheel carrier)	..	..	..	..	..	1
181067	Frame rear end splasher assembly (used on side wheel carrier)	..	..	..	1	..	..
184995	Frame rear end splasher assembly (used on side wheel carrier)	1	1	1	..	..	..
178763	Frame rear end splasher assembly (used on 726-733-740) (used with double wheel carrier)	1	1	1	..	..	..
181795	Frame rear end splasher assembly (used with double wheel carrier)	..	..	..	1	..	..
191634	Frame rear end splasher assembly (side wheel carrier) (not used on bodies 516-537)	..	..	..	..	..	1

packardinfo.com

Piece No.	Name	No. Required 726 733	740 745	826 833	840 845	901 902	903 904
194167	Frame rear end splasher assembly (side wheel carrier) (used on bodies 516-537)	..	..	..	..	..	1
191632	Frame rear end splasher assembly (side wheel carrier) (not used on bodies 506-527)	..	..	..	..	1	..
194168	Frame rear end splasher assembly (side wheel carrier) (used on bodies 506-527)	..	..	..	..	1	..
191636	Frame rear end splasher assembly (double rear carrier) (not used on bodies 516-537)	..	..	..	..	..	1
194162	Frame rear end splasher assembly (double rear carrier) (used on bodies 516-537)	..	..	..	..	..	1
191635	Frame rear end splasher assembly (double rear carrier) (not used on bodies 506-527)	..	..	..	..	1	.
194163	Frame rear end splasher assembly (double rear carrier) (used on bodies 506-527)	..	..	..	..	1	..
175943	Frame rear end splasher screw—short (used on 740)	4	4	4	4	..	..
62065	Washer ($\frac{17}{64}$ x $\frac{3}{4}$" plain) (used on 740)	4	4	4	4	.	..
5502	Lockwasher ($\frac{1}{4}$") (used on 740)	4	4	4	4	..	..
7004	Nut ($\frac{1}{4}$"—28) (used on 740)	4	4	4	4	..	..
175944	Washer (special) (used on 740)	4	4	4	4	..	.
175942	Frame rear end splasher screw—long (used on 740) (used with side or double wheel carrier)	2	2	..	..	..	..
7004	Nut ($\frac{1}{4}$"—28) (used on 740) (use with side wheel carrier)	2	2	2	2	..	..
5502	Lockwasher ($\frac{1}{4}$") (used on 740) (use with side wheel carrier)	2	2	2	2	..	..
181058	Frame rear end splasher to frame spacer assembly (use with side wheel carrier)	..	..	..	2	..	..
162523	Frame rear end splasher bracket to splasher liner (used on 745)	..	2	..	..	..	..
191215	Frame rear end splasher bar (body models 500-3-4-5-510-14-15)	..	..	..	..	2	2
191268	Frame rear end splasher bar (body models 501-7-8-9-13-521-511-17-18-19-531-523-533-543)	..	..	..	..	2	2
191269	Frame rear end splasher bar (body models 506-516-527-537)	..	..	..	..	2	2
5447	Lockwasher ($\frac{1}{4}$")	..	..	..	..	8	8
191658	Screw ($\frac{1}{4}$"—20 x $\frac{3}{8}$" hex. hd.)	..	..	..	..	8	8
190246	Frame rear end splasher bolt hole cover	..	..	..	..	2	2
184994	Frame rear end splasher clamp	..	..	1	1	1	1
5868	Screw (No. 10—32 x $\frac{5}{8}$" flat hd. mach.)	..	..	2	2	2	2
5491	Lockwasher	..	..	2	2	2	2
39403	Frame rear end splasher clamp liner ($\frac{3}{4}$" wide x 5" long)	..	..	1	1	1	1
175940	Frame rear end splasher cover (used on 740) (use with side or double wheel carrier)	1	1	..	..	..	..
194142	Frame rear end splasher to cross channel spacer (use with double wheel carrier)	..	..	..	..	2	2
194143	Frame rear end splasher to cross channel spacer liner (use with double wheel carrier)	..	..	..	..	4	4
162522	Frame rear end splasher to frame liner (used on 745)	..	2	..	..	..	..
175938	Frame rear end splasher liner (used on 740)	2	2	2	2	..	..
191327	Frame rear end splasher liner	..	..	..	..	2	2
176717	Frame rear end splasher to cross tube spacer (used on 740)	2	2	2	..	..	..
164083	Frame rear end splasher trim strip (used on 745)	..	1	..	..	..	..
163613	Tee bolt (used on 745)	..	4	..	..	..	..
162500	Nut (used on 745)	..	4	..	..	..	..
5049	Plain washer ($\frac{3}{8}$" special) (used on 745)	..	4	..	..	..	..
194720	Frame rear end splasher wheel carrier bracket brace shroud assembly (single rear carrier)	..	..	..	..	1	1
194720	Frame rear end splasher wheel carrier bracket brace shroud assembly (double rear carrier)	..	..	..	..	2	2
5771	Screw (No. 10—32 x $\frac{3}{8}$" rnd. hd.) (single rear carrier)	..	..	..	..	2	2
5771	Screw (No. 10—32 x $\frac{3}{8}$" rnd. hd.) (double rear carrier)	..	..	..	..	4	4
5500	Lockwasher (No. 10) (single rear carrier)	..	..	..	..	2	2
5500	Lockwasher (No. 10) (double rear carrier)	..	..	..	..	4	4
194719	Frame rear end splasher wheel carrier bracket brace shroud hole cover assembly (used on bodies 506-516-527-537) (double rear carrier and side wheel carrier)	..	..	..	..	1	1

packardinfo.com

Printed in U. S. A.

Piece No.	Name	No. Required 726 733	740 745	826 833	840 845	901 902	903 904
5771	Screw (No. 10 - 32 x $\frac{3}{8}$" rnd. hd.) (used on bodies 506-16-527-537) (double rear carrier and side wheel carrier)	..	..	..	..	2	2
5500	Lockwasher (No. 10) (used on bodies 506-16-527-537) (double rear carrier and side wheel carrier)	..	..	..	..	2	2
170254	Frame rear intermediate channel assembly (used on 726)	1	..	..	..	..	..
180791	Frame rear intermediate channel assembly (used on 826)	..	..	1	..	..	..
170116	Frame rear intermediate channel assembly (used on 733)	1	..	..	..	..	..
180792	Frame rear intermediate channel assembly (used on 833)	..	..	1	..	..	..
174662	Frame rear intermediate channel assembly (used on 740)	..	1	..	..	..	..
180793	Frame rear intermediate channel assembly (used on 840)	..	..	..	1	..	..
171813	Frame rear intermediate channel assembly (used on 745)	..	1	..	..	..	..
180794	Frame rear intermediate channel assembly (used on 845)	..	..	..	1	..	..
186703	Frame rear intermediate channel	..	..	..	..	1	1
170130	Frame side—left (used on 726)	1	..	..	..	..	..
180500	Frame side—left (used on 826)	..	..	1	..	..	..
190774	Frame side—left (used on 901)	..	..	..	..	1	..
170128	Frame side—left (used on 733)	1	..	..	..	..	..
179287	Frame side—left (used on 833)	..	..	1	..	..	..
190776	Frame side—left (used on 902)	..	..	..	..	1	..
170205	Frame side—left (used on 740)	..	1	..	..	..	..
180207	Frame side—left (used on 840)	..	..	..	1	..	..
190778	Frame side—left (used on 903)	..	..	..	..	..	1
175178	Frame side—left (used on 745)	..	1	..	..	..	..
180502	Frame side—left (used on 845)	..	..	..	1	..	..
190780	Frame side—left (used on 904)	..	..	..	..	..	1
175537	Frame side—left (used on 745 custom)	..	1	..	..	..	..
170227	Frame side—right (used on 726)	1	..	..	..	..	..
180501	Frame side—right (used on 826)	..	..	1	..	..	..
190775	Frame side—right (used on 901)	..	..	..	..	1	..
170129	Frame side—right (used on 733)	1	..	..	..	..	..
180244	Frame side—right (used on 833)	..	..	1	..	..	..
190777	Frame side—right (used on 902)	..	..	..	..	1	..
170226	Frame side—right (used on 740)	..	1	..	..	..	..
180214	Frame side—right (used on 840)	..	..	..	1	..	..
190779	Frame side—right (used on 903)	..	..	..	..	..	1
175179	Frame side—right (used on 745)	..	1	..	..	..	..
180503	Frame side—right (used on 845)	..	..	..	1	..	..
190781	Frame side—right (used on 904)	..	..	..	..	..	1
175538	Frame side—right (used on 745 custom)	..	1	..	..	..	..

FRONT AXLE

180346	Front axle (see technical letter No. 1899)	1	1	..	..	..	..
183967	Front axle	..	..	1	1	..	..
190547	Front axle	..	..	..	..	1	1
132163	Steering cross tube	1	1	1	1	..	..
190548	Steering cross tube	..	..	..	..	1	1
126145	Steering cross tube ball joint	2	2	2	2	2	2
4551	Key (Woodruff No. 5)	2	2	2	2	2	2
7109	Nut ($\frac{7}{16}$" castle)	2	2	2	2	2	2
4303	Cotter spring ($\frac{1}{8}$ x $\frac{7}{8}$")	2	2	2	2	2	2
128082	Steering cross tube ball joint dust shield	2	2	2	2	2	2
114211	Steering cross tube ball joint dust shield shim	x	x	x	x	x	x
126149	Steering cross tube ball socket—lower	2	2	2	2	2	2
126148	Steering cross tube ball socket—upper	2	2	2	2	2	2
137118	Steering cross tube ball socket casing	2	2	2	2	2	2
7815	Screw ($\frac{7}{16}$"—24 x $1\frac{1}{8}$" hex. hd.)	4	4	4	4	4	4
7005	Nut ($\frac{7}{16}$"—24 plain)	4	4	4	4	4	4
5504	Lockwasher ($\frac{7}{16}$")	4	4	4	4	4	4

packardinfo.com

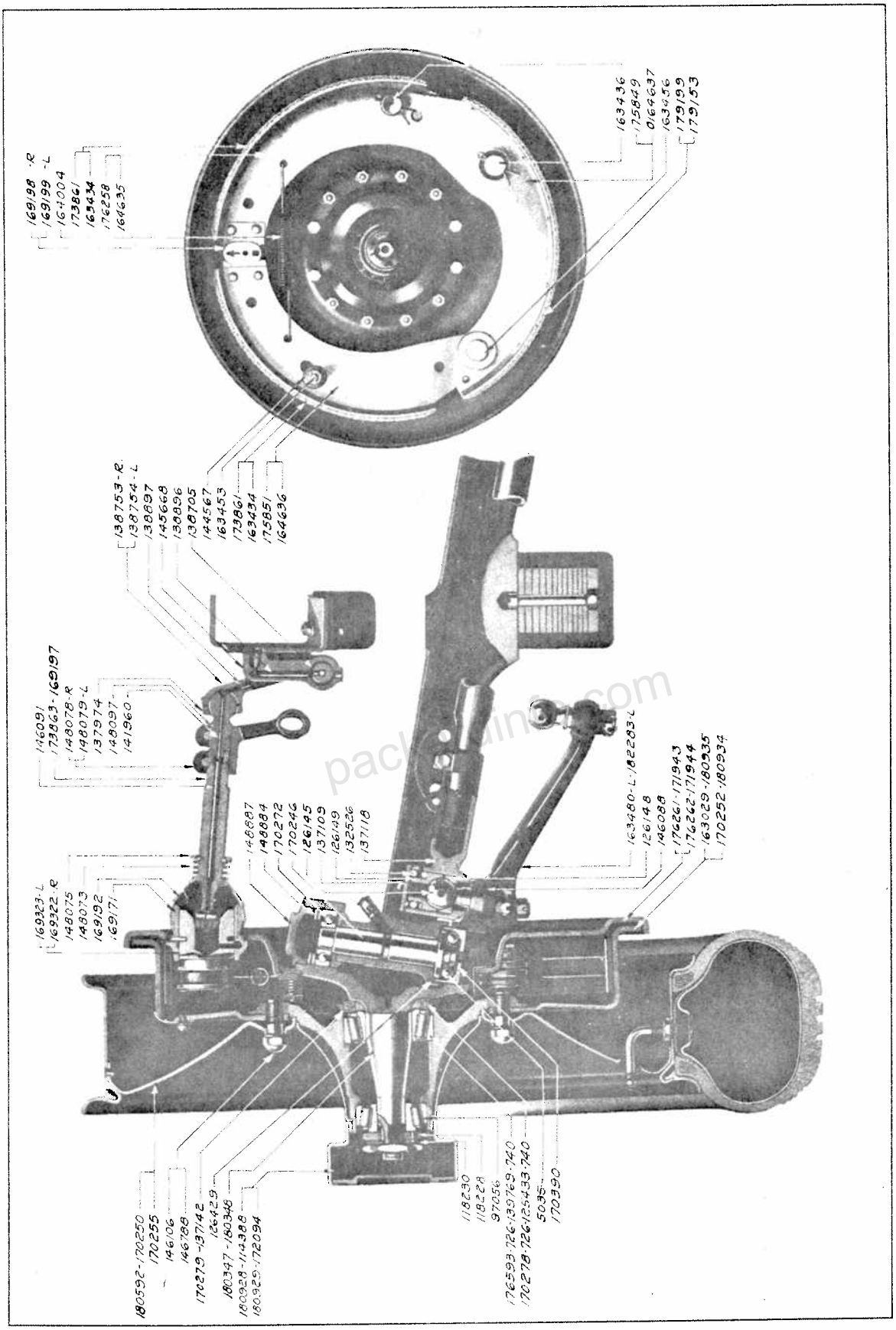

726-733-740-745
826-833-840-845

Printed in U. S. A

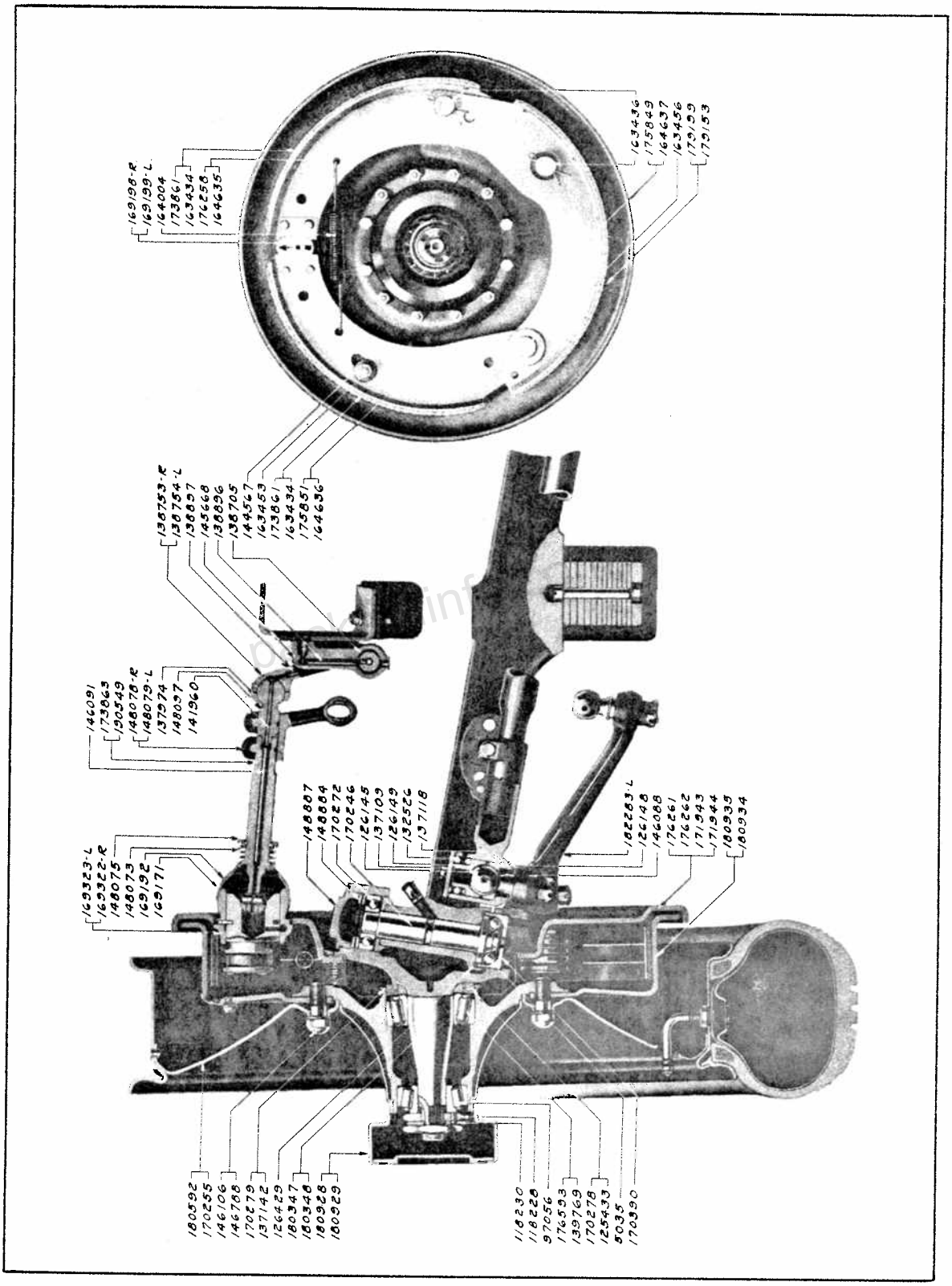
163436
175849
164637
163456
179,59
179,53
169198-R
169199-L
164004
173861
163434
176258
164635
138753-R
138754-L
138857
145668
138896
138705
144567
163453
173861
163434
175851
164636
146091
173863
130549
148078-R
148079-L
137974
148097
141360
148807
148884
170272
170246
126145
137109
126149
132522
137118
182253-L
126148
146088
176261
176262
171943
171944
180933
180934
169323-L
169322-R
148075
148073
169192
169171
180592
170255
146106
146768
170279
131142
126429
180347
180346
180928
180929
118230
118228
97056
176593
139769
170278
125433
5035
170390

packardinfo.com

Piece No.	Name	No. Required 726 733	743 745	826 833	840 845	901 902	903 904
137109	Steering cross tube ball socket casing cap	2	2	2	2	2	2
7827	Screw ($\frac{1}{4}$—28 x $\frac{3}{4}$″)	4	4	4	4	4	4
5502	Lockwasher ($\frac{1}{4}$″)	4	4	4	4	4	4
126151	Steering cross tube ball socket casing cap gasket	2	2	2	2	2	2
132526	Steering cross tube ball socket spring	2	2	2	2	2	2
180347	Steering knuckle	2	..	2	..	2	..
180348	Steering knuckle	..	2	..	2	..	2
118228	Steering knuckle adjusting nut ($\frac{7}{8}$″—14)	4	4	4	4	4	4
4320	Cotter pin ($\frac{5}{32}$ x 1$\frac{1}{8}$″)	2	2	2	2	2	2
118230	Steering knuckle adjusting nut lockwasher	2	2	2	2	2	2
43293	Steering knuckle adjusting nut pin	2	2	2	2	2	2
139769	Steering knuckle bearing inboard assembly (Timken No. 3383)	..	2	..	2	..	2
176593	Steering knuckle bearing inboard assembly (Timken No. 2788)	2	..	2	..	2	..
97056	Steering knuckle bearing outboard assembly (Timken No. 2687)	2	2	2	2	2	2
125433	Steering knuckle bearing inboard dust washer	..	2	..	2	..	2
170278	Steering knuckle bearing inboard dust washer	2	..	2	..	2	..
137153	Steering knuckle bearing inboard dust washer retainer	..	4	..	4	..	4
170277	Steering knuckle bearing inboard dust washer retainer	4	..	4	..	4	..
137142	Steering knuckle bearing inboard spacer assembly	..	2	..	2	..	2
170279	Steering knuckle bearing inboard spacer assembly	2	..	2	..	2	..
146088	Steering knuckle lever—right	1	1	1	1	1	1
163480	Steering knuckle lever—left and oil tube assembly	1	1	..	..	..	..
182283	Steering knuckle lever—left and oil tube assembly	..	..	1	1	1	1
126495	Screw ($\frac{7}{16}$—20 x 2$\frac{3}{32}$″ hex. hd.)	4	4	4	4	4	4
4291	Cotter pin ($\frac{3}{32}$ x $\frac{3}{4}$″)	4	4	4	4	4	4
7107	Nut ($\frac{7}{16}$″—20 castle)	4	4	4	4	4	4
163477	Steering knuckle lever left oil tube	1	1	1	1	1	1
132142	Steering knuckle lever ball joint	1	1	1	1	1	1
4551	Key (Woodruff No. 5)	1	1	1	1	1	1
7109	Nut ($\frac{9}{16}$″—18 castle)	1	1	1	1	1	1
4306	Cotter spring ($\frac{1}{8}$ x $\frac{7}{8}$″)	1	1	1	1	1	1
114211	Steering knuckle lever ball joint cup washer	2	2	2	2	2	2
114316	Steering knuckle lever ball joint plain washer	1	1	1	1	1	1
170274	Steering knuckle oil guard	2	..	2	..	2	..
163207	Steering knuckle oil guide	..	2	..	2	..	2
170246	Steering knuckle pin	2	2	2	2	2	2
114955	Lubricator connector (Alemite type "A" male)	2	2	2	2	2	2
116272	Lubricator connector dust cap (Alemite)	2	2	2	2	2	2
170272	Steering knuckle pin bearing (upper)	2	2	2	2	2	2
126436	Steering knuckle pin bearing upper washer	2	2	2	2	2	2
148884	Steering knuckle pin bearing upper spring washer	4	4	4	4	4	4
5035	Steering knuckle pin bearing ball ($\frac{7}{16}$″)	18	18	18	18	18	18
170390	Steering knuckle pin bearing—lower cup	2	2	2	2	2	2
126429	Steering knuckle pin bearing lower washer (felt)	2	2	2	2	2	2
148887	Steering knuckle plug—upper	2	2	2	2	2	2
126255	Steering knuckle shim (.005″)	x	x	x	x	x	x
126433	Steering knuckle shim (.025″)	x	x	x	x	x	x
157982	Steering knuckle stop screw (prior to frame No. 300027 for 726-733, 186316 for 740 and 185682 for 745)	2	2	..	..	..	..
180803	Steering knuckle stop screw (after frame No. 300026 for 726-733, 186315 for 740 and 185681 for 745)	2	2	2	2	2	2
7006	Nut ($\frac{3}{8}$″—24 S. A. E. plain)	2	2	2	2	2	2

FRONT AXLE SPRING

179136	Front axle spring and cover assembly—left (2 x 38 x 850 lbs.—325 rate)	1	..	..	..	..	..
180366	Front axle spring and cover assembly—left (2$\frac{1}{4}$ x 42 x 850 lbs.—325 rate)	..	..	1	..	1	..
179138	Front axle spring and cover assembly—left (2 x 38 x 950 lbs.—325 rate)	..	1	..	..	..	..
180368	Front axle spring and cover assembly—left (2$\frac{1}{4}$ x 42 x 950 lbs.—325 rate)	..	..	..	1	..	1

packardinfo.com

SPRING COVER CHART

Spring and Cover Number	Front Half of Spring					Rear Half of Spring				
	Canvas	"A" Cover	"B" Cover	"C" Cover	"D" Cover	Canvas	"E" Cover	"F" Cover	"G" Cover	"H" Cover
175054 Obsolete	179151	175001	175002	175003	175004	179152	175001	175002	175005	175006
175052 Obsolete	179151	175001	175002	175003	175004	179152	175001	175002	175005	175006
175946 Obsolete	179151	175001	175002	175003	175004	179152	175001	175002	175005	175006
176722	179151	177881	177880		177879	179152	177882	177883		177884
176724	179151	177881	177880		177879	179152	177882	177883		177884
179136	179151	179141	179142	175003	175004	179152	179141	179143	179144	175006
179138	179151	179141	179142	175003	175004	179152	179141	179143	179144	175006
179140	179151	179141	179142	175003	175004	179152	179141	179143	179144	175006
181763	179151	175001	175002	175003	175004	179152	175001	175002	175005	175006
181764	179151	175001	175002	175003	175004	179152	175001	175002	175005	175006
180366	180356	180401	180402	180403	180404	180357	180401	180405	180406	180407
180368	180356	180401	180402	180403	180404	180357	180401	180405	180406	180407
180370	180356	180401	180402	180403	180404	180357	180401	180405	180406	180407
186031	180356	180401	180402	180403	180404	180357	180401	180405	180406	180407
186032	180356	180401	180402	180403	180404	180357	180401	180405	180406	180407
186033	180356	180401	180402	180403	180404	180357	180401	180405	180406	180407
180360	180356	180401	180402	180403	180404	180357	180401	180405	180406	180407
180362	180356	180401	180402	180403	180404	180357	180401	180405	180406	180407
180364	180356	180401	180402	180403	180404	180357	180401	180405	180406	180407

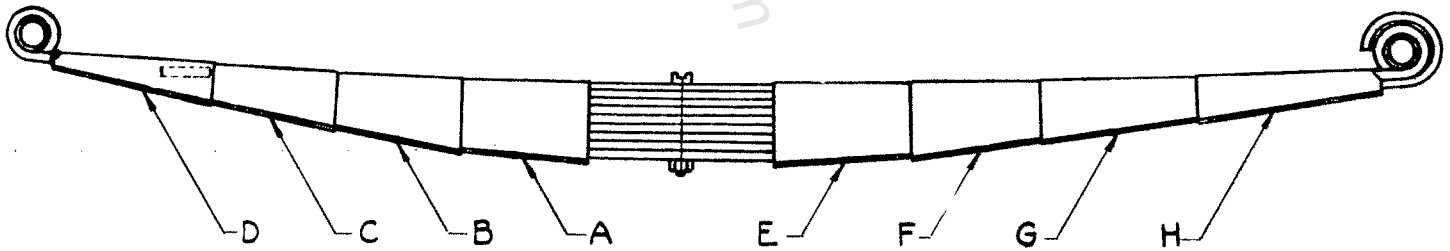

packardinfo.com

Printed in U. S. A.

Piece No.	Name	No. Required 726 733	740 745	826 833	840 845	901 902	903 904
176724	Front axle spring and cover assembly left (2 x 38 x 950 lbs. 275 rate)	1	1	..	..	..	..
176722	Front axle spring and cover assembly—right (2 x 38 x 1050 lbs. 275 rate)	1	1	..	..	..	..
180368	Front axle spring and cover assembly—right (2¼ x 42 x 950 lbs.—325 rate)	..	..	1	..	1	..
179138	Front axle spring and cover assembly—right (2 x 38 x 950 lbs.—325 rate)	1	..	..	..	..	..
180370	Front axle spring and cover assembly—right (2¼ x 42 x 1050 lbs.—325 rate)	..	..	..	1	..	1
179140	Front axle spring and cover assembly—right (2 x 38 x 1050 lbs.—325 rate)	..	1	..	..	..	..
186031	Front axle spring and cover assembly—right (2¼ x 42 x 850 lbs.—375 rate)	..	..	1	..	1	..
186032	Front axle spring and cover assembly—left (2¼ x 42 x 950 lbs.—375 rate)	..	..	1	..	1	..
186032	Front axle spring and cover assembly—right (2¼ x 42 x 950 lbs.—375 rate)	..	..	..	1	..	1
186033	Front axle spring and cover assembly—left (2¼ x 42 x 1050 lbs.—375 rate)	..	..	..	1	..	1
180360	Front axle spring and cover assembly—right (2¼ x 42 x 850 lbs.—275 rate)	..	..	1	..	1	..
180362	Front axle spring and cover assembly—left (2¼ x 42 x 950 lbs.—275 rate)	..	..	1	..	1	..
180362	Front axle spring and cover assembly—right (2¼ x 42 x 950 lbs.—275 rate)	..	..	..	1	..	1
180364	Front axle spring and cover assembly—left (2¼ x 42 x 1050 lbs.—275 rate)	..	..	..	1	..	1
132103	Front axle spring block	2	2	..	..	..	..
180212	Front axle spring block	..	..	2	2	2	2
132108	Front axle spring bolt—front	2	2	..	..	..	..
180800	Front axle spring bolt—front	..	..	2	2	2	2
132012	Front axle spring bolt—front—nut	2	2	..	..	..	..
7009	Front axle spring bolt—front—nut (9/16"—18 std.)	..	..	2	2	2	2
5807	Lockwasher (9/16")	..	..	2	2	2	2
115244	Front axle spring bolt—front—plug	2	2	2	2	2	2
180550	Front axle spring bolt front washer	..	..	2	2	2	2
180770	Front axle spring bolt front spring washer—inner	..	..	2	2	..	..
194578	Front axle spring bolt front spring washer—inner	..	..	..	..	2	2
180802	Front axle spring bolt front spring washer—outer	..	..	2	2	..	..
194579	Front axle spring bolt front spring washer—outer	..	..	..	..	2	2
176710	Front axle spring bolt—rear	3	3	..	..	..	..
180339	Front axle spring bolt—rear	..	..	2	2	2	2
132012	Front axle spring bolt rear nut (¾" castle)	3	3	..	..	..	..
7009	Front axle spring bolt rear nut (9/16"—18 std.)	..	..	2	2	2	2
113860	Front axle spring bolt rear nut (¾" plain special)	3	3	..	..	..	..
4320	Cotter pin (5/32 x 1 1/8")	3	3	..	..	..	..
5807	Lockwasher (9/16")	..	..	2	2	2	2
115244	Front axle spring bolt rear plug	3	3	2	2	2	2
180550	Front axle spring bolt rear washer	..	..	2	2	2	2
180770	Front axle spring bolt rear spring washer—inner	..	..	2	2	..	..
194578	Front axle spring bolt rear spring washer—inner	..	..	..	..	2	2
180802	Front axle spring bolt rear spring washer—outer	..	..	2	2	..	..
194579	Front axle spring bolt rear spring washer—outer	..	..	..	..	2	2
164713	Front axle spring bracket—rear left	1	1	..	..	..	..
180764	Front axle spring bracket—rear left	..	..	1	1	..	..
190787	Front axle spring bracket—rear left	..	..	..	..	1	1
145697	Front axle spring bracket—rear right	1	1	..	..	..	..
180567	Front axle spring bracket—rear right	..	..	1	1	..	..
194811	Front axle spring bracket—rear right	..	..	..	..	1	1
180341	Front axle spring bracket trunnion bolt	..	..	1	1	1	1
5807	Lockwasher (9/16")	..	..	1	1	1	1
7009	Nut (9/16"—18 std.)	..	..	1	1	1	1
180550	Front axle spring bracket trunnion bolt washer	..	..	1	1	1	1
180770	Front axle spring bracket trunnion bolt spring washer—inner	..	..	1	1	..	..
194578	Front axle spring bracket trunnion bolt spring washer—inner	..	..	..	..	1	1
180802	Front axle spring bracket trunnion ball spring washer—outer	..	..	1	1	..	..
194579	Front axle spring bracket trunnion ball spring washer—outer	..	..	..	..	1	1
145698	Front axle spring bracket rear reinforcement—left	1	1	..	..	..	..
180779	Front axle spring bracket rear reinforcement—left	..	..	1	1	..	..
145699	Front axle spring bracket rear reinforcement—right	1	1	..	..	..	..
180246	Front axle spring bracket rear reinforcement—right	..	..	1	1	..	..

Piece No.	Name	No. Required 726 733	740 745	826 833	840 845	901 902	903 904
164718	Front axle spring bracket rear trunnion assembly	1	1	..	..	..	..
180763	Front axle spring bracket rear trunnion	..	..	1	1	1	1
164719	Front axle spring bracket rear trunnion bushing	1	1	..	..	..	..
179247	Front axle spring bracket rear trunnion bushing	..	..	1	1	1	1
97762	Front axle spring bracket rear trunnion spring—inner	2	2	..	..	..	..
97763	Front axle spring bracket rear trunnion spring—outer	2	2	..	..	..	..
180758	Front axle spring bracket rear trunnion spring	..	..	4	4	4	4
116795	Front axle spring bushing	4	4	..	..	..	..
64383	Front axle spring bushing	..	..	4	4	4	4
23731	Front axle spring center bolt and nut	2	2	2	2	2	2
169310	Front axle spring clip (use with 9 leaf spring)	4	4	..	..	..	..
139512	Front axle spring clip (use with 13 leaf spring)	4	4	..	..	..	..
180209	Front axle spring clip	..	..	4	4	4	4
139515	Nut	8	8	8	8	8	8
5510	Lockwasher (½″)	8	8	8	8	8	8

NOTE: See chart for front spring covers

179151	Front axle spring cover canvas—front	2	2	..	..	..	..
180356	Front axle spring cover canvas—front	..	..	2	2	2	2
179152	Front axle spring cover canvas—rear	2	2	..	..	..	..
180357	Front axle spring cover canvas—rear	..	..	2	2	2	2
195943	Front axle spring main leaf	..	..	2	2	2	2
147298	Front axle spring rubber bumper	2	2	2	2	2	2
135910	Front axle spring rubber bumper bracket	2	2	2	2	2	2
7810	Screw (5/16—24 x 1¼″ hex. hd.)	4	4	4	4	4	4
7005	Nut (5/16″—24 plain)	4	4	4	4	4	4
5504	Lockwasher (5/16″)	4	4	4	4	4	4
145700	Front axle spring shackle bracket assembly—left	1	1	..	..	..	..
186112	Front axle spring shackle bracket assembly—left	..	..	1	1	..	..
194430	Front axle spring shackle bracket assembly—left	..	..	..	..	1	1
145701	Front axle spring shackle bracket assembly—right	1	1	..	..	..	..
186113	Front axle spring shackle bracket assembly—right	..	..	1	1	..	..
194431	Front axle spring shackle bracket assembly—right	..	..	..	..	1	1
135949	Front axle spring shackle bracket bushing	2	2	..	..	..	..
158375	Front axle spring shackle bracket bushing	..	..	2	2	2	2
143448	Front axle spring shackle bracket rivet—long special	2	2	..	..	..	..
184707	Front axle spring shackle bracket rivet—long special	..	..	2	2	..	..
186954	Front axle spring shackle bracket rivet—long special	..	..	..	..	2	2
132108	Front axle spring shackle bracket bolt	2	2	..	..	..	..
180800	Front axle spring shackle bracket bolt	..	..	2	2	2	2
132012	Front axle spring shackle bracket bolt nut	2	2	..	..	..	..
7009	Front axle spring shackle bracket bolt nut (9/16″—18 std.)	..	..	2	2	2	2
4320	Cotter pin (5/32 x 1⅛″)	4	4	..	..	..	..
5807	Lockwasher (9/16″)	..	..	2	2	2	2
180770	Front axle spring shackle bracket bolt spring washer—inner	..	..	2	2	..	..
194578	Front axle spring shackle bracket bolt spring washer—inner	..	..	..	..	2	2
180802	Front axle spring shackle bracket bolt spring washer—outer	..	..	2	2	..	..
194579	Front axle spring shackle bracket bolt spring washer—outer	..	..	..	..	2	2
180550	Front axle spring shackle bracket bolt spring bolt washer	..	..	2	2	2	2
132109	Front axle spring shackle link—inner	2	2	..	..	..	..
180581	Front axle spring shackle link—inner	..	..	2	2	2	2
180912	Front axle spring shackle link—outer	2	2	2	2	2	2
184810	Front axle spring shackle link oil restriction	..	..	2	2	2	2

carkardinfo.com

Printed in U. S. A.

GASOLINE FILTER

(See page No. 89 for 8th Series Gasoline Filter)

Piece No.	Name	No. Required 726 733	740 745	826 833	840 845	901 902	903 904
169001	Gasoline filter assembly	1	1	..	..	..	..
176831	Gasoline filter to carburetor tube assembly (prior to frame No. 282724)	1	..	..	..	..	..
182141	Gasoline filter to carburetor tube assembly (after frame No. 282723)	1	..	..	..	..	..
176833	Gasoline filter to carburetor tube assembly (prior to frame No. 179402 for 745 and prior to frame No. 180595 for 740)	..	1	..	..	..	..
177315	Gasoline filter to carburetor tube assembly (used on 745) (after frame No. 179401)	..	1	..	..	..	..
182144	Gasoline filter to carburetor tube assembly (used on 740) (after frame No. 180594)	..	1	..	..	..	..
171188	Union nut (⅜") (used on 726-733-740) (use with brass tubing)	2	2	..	..	..	..
5468	Union nut (⅜") (use with copper tubing)	2	2	..	..	..	..
169042	Union (used on 745)	..	1	..	..	..	..
169043	Union (used on 740)	1	1	..	..	..	..
157926	Gasoline filter glass clamp assembly	1	1	..	..	..	..
157929	Gasoline filter glass	1	1	..	..	..	..
157928	Gasoline filter screen	1	1	..	..	..	..
157927	Gasoline filter glass gasket	1	1	..	..	..	..

GASOLINE SYSTEM

146955	Gasoline gauge tube clip	..	..	..	..	2	2
167628	Gasoline tank assembly (used on 745)	..	1	..	..	..	..
184477	Gasoline tank assembly (used on 740)	1	1	1	1	..	..
190862	Gasoline tank assembly	..	..	..	..	1	1
5422	Gasoline tank drain plug (¼" hex. hd.)	1	1	1	1	1	1
170042	Gasoline tank to frame rear channel bracket—lower (used on 740)	2	2	..	..	..	..
162437	Gasoline tank to frame rear channel bracket—lower (used on 745)	..	2	..	..	..	..
180809	Gasoline tank to frame rear channel bracket—lower	..	..	2	2	..	..
190175	Gasoline tank to frame rear channel bracket—lower	..	..	..	..	1	1
170041	Gasoline tank to frame rear channel bracket—upper (used on 740)	2	2	..	..	..	..
162436	Gasoline tank to frame rear channel bracket—upper (used on 745)	..	2	..	..	..	..
180810	Gasoline tank to frame rear channel bracket—upper	..	..	2	2	..	..
190174	Gasoline tank to frame rear channel bracket—upper	..	..	..	..	1	1
7809	Bolt (5/16"—24 x ⅞" hex. hd.)	4	6	4	4	2	2
5504	Lockwasher (5/16") (used on 745)	4	6	4	4	2	2
7005	Nut (5/16"—24 plain) (used on 745)	4	6	4	4	2	2
190134	Gasoline tank to frame rear intermediate channel bracket—lower	..	..	..	..	2	2
190135	Gasoline tank to frame rear intermediate channel bracket—upper	..	..	..	..	2	2
7809	Bolt (5/16"—24 x ⅞" hex. hd.)	..	..	..	..	4	4
5504	Lockwasher (5/16"—24)	..	..	..	..	4	4
7005	Nut (5/16"—24 plain)	..	..	..	..	4	4
182135	Gasoline tank fuel pump to motor carburetor frame junction assembly	..	..	1	1	..	..
7852	Screw (¼—28 x ⅞" hex. hd. mach.)	..	..	1	1	..	..
5502	Lockwasher (¼")	..	..	1	1	..	..
7004	Nut (¼"—28)	..	..	1	1	..	..
170049	Gasoline tank gauge assembly (used on 740)	1	1	1	1	..	..
167634	Gasoline tank gauge assembly (used on 745)	..	1	..	..	..	..
190233	Gasoline tank gauge assembly	..	..	..	..	1	1
5569	Screw (No. 10—32 x ½" fill. hd.)	6	6	6	6	6	6
167616	Gasket	1	1	1	1	1	1
167626	Gasoline tank gauge tube assembly (used on 726-826)	1	..	1	..	..	..
182332	Gasoline tank gauge tube assembly (used on 901)	..	..	..	..	1	..
167627	Gasoline tank gauge tube assembly (used on 733-833-840)	1	1	1	1	..	..
145278	Gasoline tank gauge tube assembly (used on 902-903)	..	..	..	..	1	1

Piece No.	Name	No. Required 726 733	740 745	826 833	840 845	901 902	903 904
182332	Gasoline tank gauge tube assembly (used on 845)	..	..	..	1	..	..
162430	Gasoline tank gauge tube assembly (used on 904)	..	..	..	..	..	1
169041	Gasoline tank gauge tube bushing	1	1	1	1	1	1
145264	Gasoline gauge and supply tube clip	1	1	1	1	1	1
5198	Screw (No. 10—32 x 5/8" hex. hd.)	1	1	1	1	1	1
5500	Lockwasher (3/16")	1	1	1	1	1	1
7003	Nut (No. 10—32 plain)	1	1	1	1	1	1
175164	Gasoline tank inlet cover (used on 740)	1	1	1	1	..	..
167771	Gasoline tank inlet cover assembly (used on 745)	..	1	..	..	..	..
190845	Gasoline tank inlet cover assembly	..	..	..	..	1	1
162432	Gasoline tank inlet bushing (used on 745)	..	1	..	..	..	..
175929	Gasoline tank inlet bushing (used on 740)	1	1	1	1	..	..
130799	Gasoline tank inlet cover gasket (used on 740)	1	1	1	1	..	..
190847	Gasoline tank inlet cover gasket	..	..	..	..	1	1
162435	Gasoline tank inlet cover gasket (used on 745)	..	1	..	..	..	..
175159	Gasoline tank inlet cover gasket retainer (used on 740)	1	1	1	1	..	..
145881	Gasoline tank inlet cover gasket retainer (used on 745)	..	1	..	..	..	..
5694	Screw (No. 8—32 x 3/4") (used on 740)	1	1	1	1	..	..
5695	Lockwasher (No. 8—32) (used on 740)	1	1	1	1	..	..
5736	Gasoline tank inlet cover hinge screw (No. 10—32 x 3/4" fill. hd. mach.)	1	1	1	1	..	..
8027	Gasoline tank inlet cover hinge screw (used on 745)	..	1	..	..	..	..
5416	Nut (No. 10—32)	1	1	1	1	..	..
175161	Gasoline tank inlet cover lock (used on 740)	1	1	1	1	..	..
158842	Gasoline tank inlet cover lock (used on 745)	..	1	..	..	..	..
191204	Gasoline tank to motor carburetor frame junction	..	..	..	..	1	1
5915	Lockwasher (11/16")	..	..	..	..	1	1
190680	Nut (11/16"—16)	..	..	..	..	1	1
191203	Union nut (flared tube)	..	..	..	..	2	2
114141	Gasoline tank support bracket screw	3	3	3	3	3	3
7007	Nut (7/16"—20 plain)	3	3	3	3	3	3
120813	Lockwire (5" long)	3	3	3	3	3	3
184480	Gasoline tube front assembly (used on 826)	..	..	1	..	..	..
191928	Gasoline tube front assembly (used on 901)	..	..	..	..	1	..
184481	Gasoline tube front assembly (used on 833)	..	..	1	..	..	..
191929	Gasoline tube front assembly (used on 902)	..	..	..	..	1	..
184482	Gasoline tube front assembly (used on 840)	..	..	..	1	..	..
191950	Gasoline tube front assembly (used on 903)	..	..	..	..	..	1
184483	Gasoline tube front assembly (used on 845)	..	..	..	1	..	..
191951	Gasoline tube front assembly (used on 904)	..	..	..	..	..	1
5867	Union nut (5/16")	..	..	2	2	2	2
194271	Gasoline tube front assembly clip	..	..	..	..	1	..
3868	Gasoline tube front assembly clip washer	..	..	..	..	1	..
183076	Gasoline tube front clip	..	..	4	5	4	5
184834	Gasoline tube front clip	..	..	..	1	..	1
7706	Screw (No. 10—32 x 1/2" fill. hd.)	..	..	..	1	..	..
7710	Screw (No. 10—32 x 5/8" fill. hd.)	..	..	..	..	..	1
3867	Washer (3/16" plain)	..	..	..	1	..	1
5500	Lockwasher (No. 10)	..	..	..	1	..	1
7003	Nut (No. 10—32)	..	..	..	1	..	1
184488	Gasoline tube rear assembly	..	..	1	1	..	..
191222	Gasoline tube rear assembly	..	..	..	..	1	1
5466	Union nut (5/16")	..	..	2	2	1	1
148463	Gasoline vacuum tank assembly (used on 726-733-740) (prior to frame No. 282724 for 726-733 and 180595 for 740)	1	1	..	..	..	..
177309	Gasoline vacuum tank assembly (used on 726-733-740) (after frame No. 282723 for 726-733 and 180594 for 740)	1	1	..	..	..	..
148029	Gasoline vacuum tank assembly (used on 745) (prior to frame No. 179402)	..	1	..	..	..	..
177310	Gasoline vacuum tank assembly (used on 745) (after frame No. 179401)	..	1	..	..	..	..
5483	Screw (5/16—24 x 3/4" hex. hd.)	4	4	..	..	..	..
5504	Lockwasher (5/16")	4	4	..	..	..	..

packardinfo.com

Printed in U. S. A.

Piece No.	Name	No. Required 726 733	740 745	826 833	840 845	901 902	903 904
3877	Screw washer (3/8" plain)	4	4	..	..	..	..
7005	Nut (5/16"—24 plain)	4	4	..	..	..	..
158573	Gasoline vacuum tank suction tube—long—assembly (not used with vacuum pump)	1	..	..	..	..	..
167136	Gasoline vacuum tank suction tube—long—assembly (not used with vacuum pump)	..	1	..	..	..	..
177312	Gasoline vacuum tank suction tube—short—assembly (after frame No. 179401)	..	1	..	..	..	..
167132	Gasoline vacuum tank suction tube—short—assembly (prior to frame No. 179402)	..	1	..	..	..	..
5426	Union (5/16" flared) (used on 740)	1	1	..	..	..	..
5444	Flared tube union conn. (5/16") (used on 745)	..	1	..	..	..	..
157466	Union nut (used on 740)	2	2	..	..	..	..
5466	Union nut (5/16" flared tube) (used on 745)	..	2	..	..	..	..
145255	Gasoline vacuum tank suction tube clip (not used with vacuum pump)	1	1	..	..	..	..
177874	Gasoline vacuum tank suction tube dash connection (use with 1/4" tubing)	1	1	..	..	..	..
173176	Gasoline vacuum tank suction tube dash connection (use with 3/16" tubing)	1	1	..	..	..	..
7006	Nut (3/8"—24 plain) (use with 3/16" tube connector)	1	1	..	..	..	..
7007	Nut (7/16"—20 plain) (use with 1/4" tube connector)	1	1	..	..	..	..
5049	Washer (3/8" plain)	1	1	..	..	..	..
110462	Washer (1/2" plain)	1	1	..	..	..	..
5805	Lockwasher (3/8")	1	1	..	..	..	..
5806	Lockwasher (7/16")	1	1	..	..	..	..
121854	Gasoline vacuum tank suction tube elbow (used on 740)	1	1	..	..	..	..
167641	Gasoline vacuum tank suction tube elbow (used on 745)	..	1	..	..	..	..
96973	Gasoline vacuum tank supply tube (in bulk)	x	x	..	..	..	..
167638	Union (5/16" flared tube) (used on 745)	..	1	..	..	..	..
147188	Union (5/16" flared tube) (used on 740)	1	1	..	..	..	..
5466	Gasoline vacuum tank supply tube union nut (5/16")	2	2	..	..	..	..
129773	Gasoline vacuum tank supply tube clip	1	1	..	..	..	..
5812	Screw (No. 10—32 x 1/2" fill. hd.)	1	1	..	..	..	..
5500	Lockwasher (3/16")	1	1	..	..	..	..
3868	Washer (1/4" plain)	1	1	..	..	..	..
7003	Nut (No. 10—32 plain)	1	1	..	..	..	..
167642	Gasoline vacuum tank vent tube (formed) (used on 740)	1	1	..	..	..	..
167134	Gasoline vacuum tank vent tube (formed) (used on 745)	..	1	..	..	..	..
143360	Gasoline vacuum tank vent tube clip	1	1	..	..	..	..
5569	Screw (No. 10—32 x 1/2" fill. hd.)	1	1	..	..	..	..
5429	Screw (No. 10—32 x 11/32" fill. hd.)	1	1	..	..	..	..
7003	Nut (No. 10—32)	1	1	..	..	..	..
3868	Washer (1/4" plain)	1	1	..	..	..	..
5500	Lockwasher (3/16")	1	1	..	..	..	..

HEADLIGHT

194912	Headlight assembly (used only with side wheel carrier)	..	..	..	..	2	..
171066	Headlight assembly	2	..	2	..	..	..
194098	Headlight assembly	..	..	..	..	2	..
171069	Headlight assembly	..	2	..	2	..	..
194099	Headlight assembly	..	..	..	..	..	2
140252	Headlight and auxiliary bulb (21-21-CP)	2	2	2	2	..	..
194004	Headlight and auxiliary bulb (32-32-CP)	..	..	..	..	2	2
172985	Headlight bracket (used on 740)	..	1	..	1	..	..
191616	Headlight bracket	..	..	..	..	1	1
178824	Headlight bracket (used on 745) (specify color)	..	1	..	..	..	..
172987	Headlight bracket	1	..	1	..	..	..
139522	Headlight bracket to fender reinforcement plate	2	2	2	2	..	..
5348	Headlight bracket to fender screw—front (3/8—24 x 11/16" carriage)	4	4	4	4	8	8
139523	Headlight bracket to fender screw nut—front	4	4	4	4	..	..
5305	Headlight bracket to fender screw—rear (3/8—24 x 1" carriage)	4	4	4	4	..	..
5506	Lockwasher (3/8")	8	8	..	..	..	..

packardinfo.com

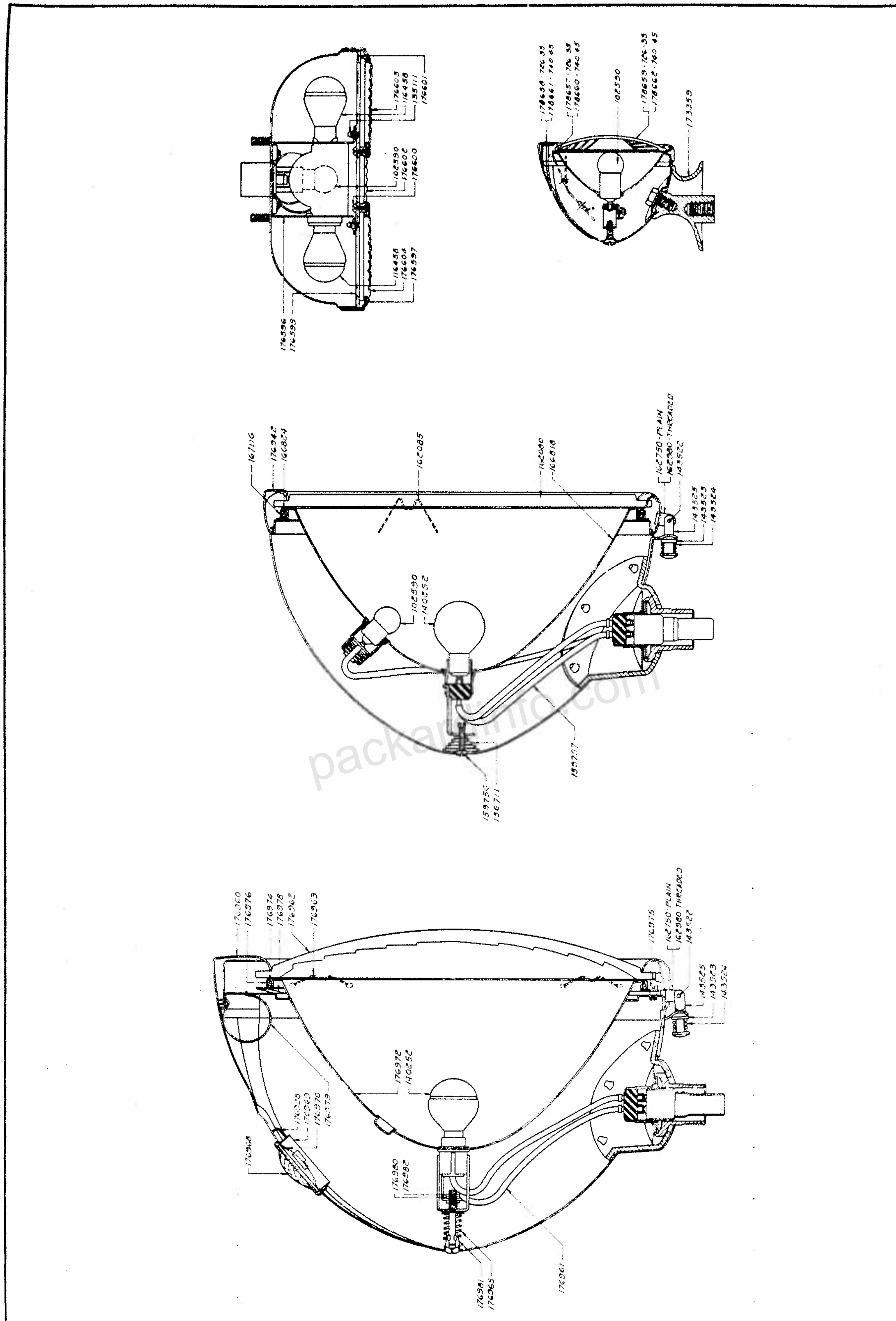

726-733-740-745
826-833-840-845

Printed in U. S. A.

Piece No.	Name	No. Required 726 733	740 745	826 833	840 845	901 902	903 904
7006	Nut ($^{3}/_{8}$"—24 plain)	4	4	4	4	8	8
114055	Washer ($^{25}/_{64}$—$^{3}/_{4}$ x 1$^{1}/_{8}$" plain)	4	4	4	4	..	..
159756	Headlight bulb adjusting screw	2	2	2	2	..	..
194565	Headlight bulb retainer	..	..	..	..	2	2
176961	Headlight bulb sockets and cables assembly	..	2	..	2	..	..
194560	Headlight bulb sockets and cables assembly	..	..	..	..	2	..
159757	Headlight bulb sockets and cables assembly	2	..	2	..	..	..
194561	Headlight bulb sockets and cables assembly	..	..	..	..	..	2
148974	Headlight cable connecting plug assembly (used only with side wheel carrier for 901-2)	..	2	..	2	2	2
138913	Headlight cable connecting plug assembly	2	..	2	..	2	..
170913	Headlight cable connecting plug to headlight sleeve	2	2	2	2	2	2
102590	Headlight dimmer bulb	2	..	2	..	2	..
176942	Headlight door assembly	2	..	2	..	2	..
176960	Headlight door assembly	..	2	..	2	..	2
143525	Headlight door catch hinge	2	2	2	2	2	2
162750	Headlight door catch hinge bracket—plain	2	2	2	2	2	2
162980	Headlight door catch hinge bracket—threaded	2	2	2	2	2	2
143524	Headlight door catch hinge spring	2	2	2	2	2	2
143523	Headlight door catch hinge spring seat	2	2	2	2	2	2
143522	Headlight door catch pin	2	2	2	2	2	2
162080	Headlight door glass	2	..	2	..	2	..
176962	Headlight door glass	..	2	..	2	..	2
162085	Headlight door glass spring retainer	6	..	6	..	6	..
176963	Headlight door glass spring retainer	..	8	..	8	..	8
166822	Headlight door glass retainer	2	..	2	..	2	..
176979	Headlight door retaining spring	..	2	..	2	2	..
194562	Headlight door retaining spring	..	..	..	..	..	2
136711	Headlight focus adjusting spring	2	..	2	..	..	..
176965	Headlight focus adjusting spring	..	2	..	2	..	..
176980	Headlight focus screw tension spring	..	2	..	2	..	..
176981	Headlight focus screw head	..	2	..	2	..	..
176982	Headlight focus screw nut	..	2	..	2	..	..
170945	Headlight gasket	2	2	2	2	2	2
176968	Headlight jewel	..	2	..	2	..	2
176969	Headlight jewel retainer	..	2	..	2	..	2
177680	Headlight jewel retainer gasket	..	2	..	2	..	2
176970	Headlight jewel retainer spring	..	2	..	2	..	2
166818	Headlight reflector	2	..	2	..	..	..
194563	Headlight reflector assembly	..	..	..	..	2	..
176972	Headlight reflector	..	2	..	2	..	..
194564	Headlight reflector assembly	..	..	..	..	..	2
176975	Headlight reflector screw	..	6	..	6	..	6
166824	Headlight reflector gasket	2	..	2	..	2	..
176974	Headlight reflector gasket	..	2	..	2	..	2
167116	Headlight reflector gasket retainer	2	..	2	..	2	..
176976	Headlight reflector gasket retainer	..	2	..	2	..	2
176978	Headlight reflector pressure spring	..	2	..	2	..	2
170879	Headlight retaining cup washer	2	2	2	2	2	2
171061	Headlight retaining nut	2	2	2	2	2	2
171588	Headlight retaining nut lockwasher	2	2	2	2	2	2

packardinfo.com

IGNITION COIL AND SWITCH

(North East No. 22293)

The following parts are listed with the manufacturer's piece numbers and are to be ordered direct from the North East Service, Inc., Rochester, New York, or nearest Service Station.

Piece No.	Name	No. Required 726 733	740 745	826 833	840 845	901 902	903 904
NE22314	Coil less lock	1	1	..	..	..	..
NE22299	Lock assembly	1	1	..	..	..	..
NE22005	Contactor	1	1	..	..	..	..
NE22293	Coil complete	1	1	..	..	..	..

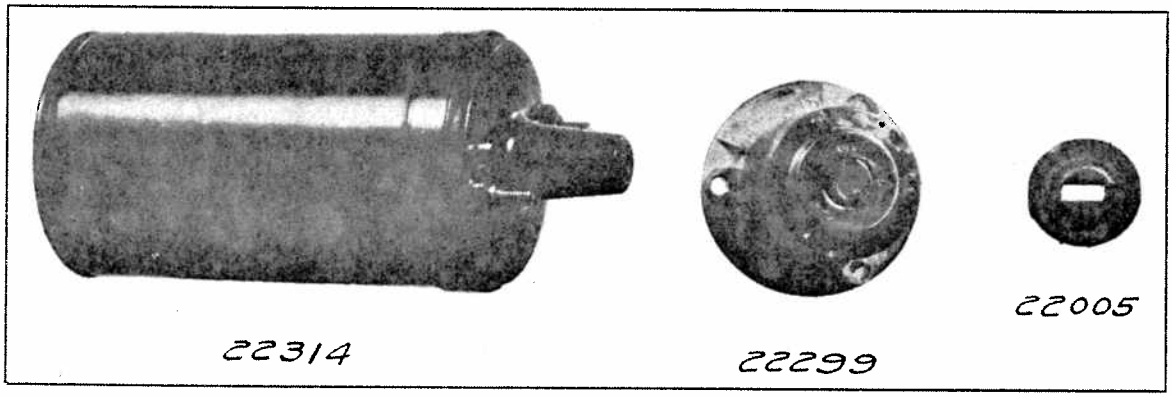

IGNITION COIL AND SWITCH

(North East No. 25430 and 27936)

The following parts are listed with the manufacturer's piece numbers and are to be ordered direct from the North East Service, Inc., Rochester, New York, or nearest Service Station.

NE- 27936	Coil complete	..	..	1	1
NE- 25430	Coil complete	1	1	1	1
NE- 25431	Coil—less lock (for coil No. 25430)	1	1	1	1
NE- 27942	Coil—less lock (for coil No. 27936)	..	..	1	1
NE- 25473	Coil lock assembly	1	1	1	1
NE- 22005	Contactor	1	1	1	1
NE-761054	Terminal—low tension	2	2	2	2
NE-115295	Binding post nut	2	2	2	2
NE-106497	Binding post nut lockwasher	2	2	2	2
NE-279381	Terminal—high tension	1	1	1	1
NE-131965	Lock assembly to coil screw	3	3	3	3
NE-131086	Lock assembly to coil screw lockwasher	3	3	3	3
NE-132099	Oil gauge connection screw	1	1	1	1
NE-106497	Oil gauge connection screw lockwasher	1	1	1	1

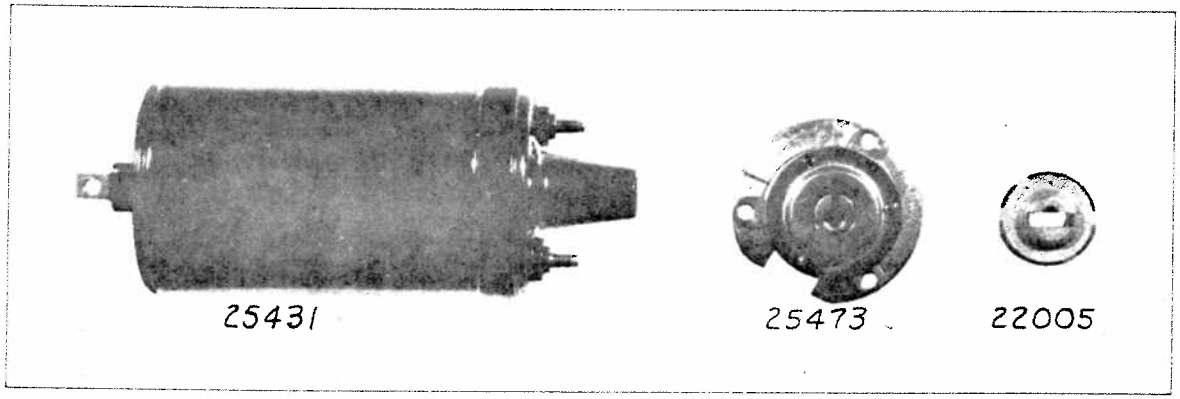

Printed in U. S. A.

Piece No.	Name	No. Required 726 733	740 745	826 833	840 845	901 902	903 904
7006	Nut 3/8"-24 plain	4	4	4	4	8	8
114055	Washer 25/64-3/4 x 1-1/8" plain	4	4	4	4	-	-
159756	Headlight bulb adjusting screw	2	2	2	2	-	-
194565	Headlight bulb retainer	-	-	-	-	2	2
176961	Headlight bulb sockets and cables assembly	-	2	-	2	-	-
194560	Headlight bulb sockets and cables assembly	-	-	-	-	2	-
159757	Headlight bulb sockets and cables assembly	2	-	2	-	-	-
194561	Headlight bulb sockets and cables assembly	-	-	-	-	-	2
148974	Headlight cable connecting plug assembly (used only with side wheel carrier for 901-2)	-	2	-	2	2	2
138913	Headlight cable connecting plug assembly	2	-	2	-	2	-
170913	Headlight cable connecting plug to headlight sleeve	2	2	2	2	2	2
102590	Headlight dimmer bulb	2	-	2	-	2	-
176942	Headlight door assembly	2	-	2	-	2	-
176960	Headlight door assembly	-	2	-	2	-	2
202404	Headlight door catch hinge (supersedes 143525)	2	2	2	2	2	2
162750	Headlight door catch hinge bracket-plain	2	2	2	2	2	2
162980	Headlight door catch hinge bracket-threaded	2	2	2	2	2	2
202406	Headlight door catch hinge spring (supersedes 143524)	2	2	2	2	2	2
202407	Headlight door catch hinge spring seat (supersedes 143523)	2	2	2	2	2	2
143522	Headlight door catch pin	2	2	2	2	2	2
162080	Headlight door glass	2	-	2	-	2	-
176962	Headlight door glass	-	2	-	2	-	2
202408	Headlight door glass spring retainer (supersedes 162085)	6	-	6	-	6	-
176963	Headlight door glass spring retainer	-	8	-	8	-	8
166822	Headlight door glass retainer	2	-	2	-	2	-
176979	Headlight door retaining spring	-	2	-	2	2	-
194562	Headlight door retaining spring	-	-	-	-	-	2
136711	Headlight focus adjusting spring	2	-	2	-	-	-
176965	Headlight focus adjusting spring	-	2	-	2	-	-
176980	Headlight focus screw tension spring	-	2	-	2	-	-
176981	Headlight focus screw head	-	2	-	2	-	-
176982	Headlight focus screw nut	-	2	-	2	-	-
170945	Headlight gasket	2	2	2	2	2	2
176968	Headlight jewel	-	2	-	2	-	2
176969	Headlight jewel retainer	-	2	-	2	-	2
177680	Headlight jewel retainer gasket	-	2	-	2	-	2
176970	Headlight jewel retainer spring	-	2	-	2	-	2
166818	Headlight reflector	2	-	2	-	-	-
194563	Headlight reflector assembly	-	-	-	-	2	-
176972	Headlight reflector	-	2	-	2	-	-
194564	Headlight reflector assembly	-	-	-	-	-	2
176975	Headlight reflector screw	-	6	-	6	-	6
166824	Headlight reflector gasket	2	-	2	-	2	-
176974	Headlight reflector gasket	-	2	-	2	-	2
167116	Headlight reflector gasket retainer	2	-	2	-	2	-
176976	Headlight reflector gasket retainer	-	2	-	2	-	2
176978	Headlight reflector pressure spring	-	2	-	2	-	2
170879	Headlight retaining cup washer	2	2	2	2	2	2
171061	Headlight retaining nut	2	2	2	2	2	2
171588	Headlight retaining nut lockwasher	2	2	2	2	2	2

packardinfo.com

IGNITION COIL

Delco-Remy Replacement Coil Parts for all 7th, 8th and 9th Series Cars

Piece No.	Name	No. Required 726 733	740 745	826 833	840 845	901 902	903 904
98176	Ignition Coil	1	1	1	1	1	1
98210	Ignition coil high tension terminal	1	1	1	1	1	1
98177	Ignition coil housing & lock assembled	1	1	1	1	1	1
5694	Ignition coil housing screw	3	3	3	3	3	3
5225	Ignition coil housing screw lock washer	3	3	3	3	3	3
98211	Ignition coil lock	1	1	1	1	1	1
182478	Ignition coil lock key	2	2	2	2	2	2
98206	Ignition coil lock bezel	1	1	1	1	1	1
98207	Ignition coil lock bezel drive screw	3	3	3	3	3	3
98205	Ignition coil lock guard or housing	1	1	1	1	1	1
3883	Ignition coil lock spacer	1	1	1	1	1	1
98208	Ignition coil lock spring washer	1	1	1	1	1	1
98209	Ignition coil switch contact assembly	1	1	1	1	1	1

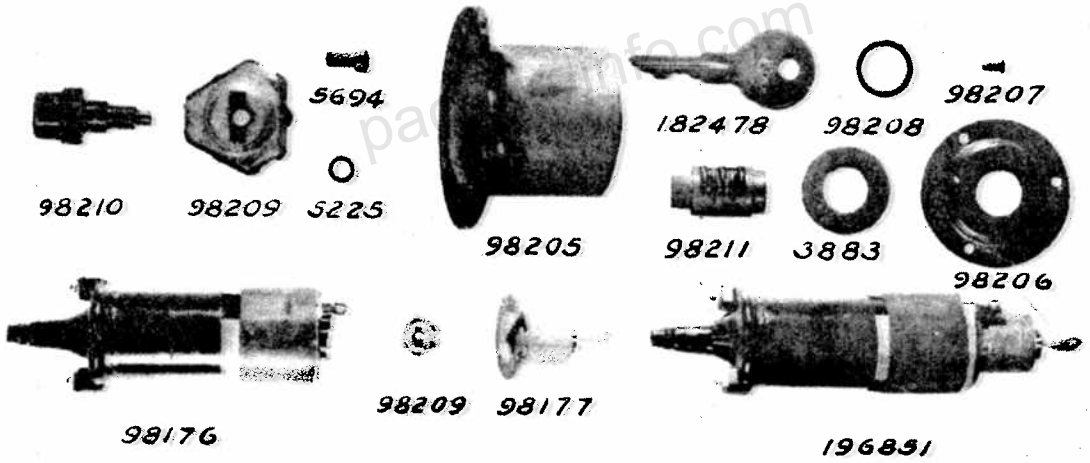

INSTRUMENT BOARD

		No. Required					
		726 733	740 745	826 833	840 845	901 902	903 904
158234	Instrument board ammeter	1	1	1	1	..	..
186876	Instrument board ammeter	..	..	..	..	1	1
190047	Gasket	..	..	..	..	1	1
169052	Instrument board ammeter glass	1	1	1	1	..	..
194443	Instrument board ammeter glass	..	..	..	..	1	1
3516	Lockwasher (No. 6)	2	2	2	2	..	..
	Note: Replacements and returns of all ammeters should be handled through Packard Factory.						
167970	Instrument board ammeter terminal insulator	1	1	1	1	1	1
171760	Instrument board carburetor air valve connecting rod assembly	1	1	1	1	..	..
7513	Yoke end adjusting ($\frac{3}{16}$")	1	1	1	1	..	..
7523	Yoke end pin ($\frac{3}{16}$")	..	..	1	1	..	..
4690	Cotter ($\frac{1}{16}$ x $\frac{3}{8}$")	2	2	2	2	..	..
7003	Nut No. 10—32)	1	1	1	1	..	..
190192	Spring washer ($\frac{3}{16}$")	..	..	2	2	..	..
190606	Instrument board carburetor air valve control cable assembly	..	..	..	..	1	1
190084	Instrument board carburetor air valve control cable eye	..	..	..	..	1	1
190616	Instrument board carburetor air valve control cable knob	..	..	..	..	1	1
171761	Instrument board carburetor air valve control rod	1	1	1	1	..	..
7513	Yoke end adjusting ($\frac{3}{16}$")	1	1	1	1	..	..
7523	Yoke end pin ($\frac{3}{16}$")	1	1	1	1	..	..
4690	Cotter ($\frac{1}{16}$ x $\frac{3}{8}$")	1	1	1	1	..	..
7003	Nut (No. 10—32 plain)	1	1	1	1	..	..
190192	Spring washer ($\frac{3}{16}$")	1	1	1	1	..	..
173347	Instrument board carburetor air valve control rod knob (ivory)	1	1	..	..	..	..
178440	Instrument board carburetor air valve control rod knob (green tint)	1	1	1	..	..	..
180635	Instrument board carburetor air valve control rod knob (Beatl)	..	..	..	1	..	..
171764	Instrument board carburetor air valve control shaft	1	1	1	1	..	..
171766	Instrument board carburetor air valve control shaft bracket	1	1	1	1	..	..
5471	Screw ($\frac{1}{4}$—28 x $\frac{3}{4}$" hex. hd.)	2	2	2	2	..	..
5502	Lockwasher ($\frac{1}{4}$")	2	2	2	2	..	..
7004	Nut ($\frac{1}{4}$"—28)	2	2	2	2	..	..
167787	Instrument board carburetor air valve control shaft lever	2	2	2	2	..	..
4023	Taper pin (No. 0 x $\frac{3}{4}$")	2	2	2	2	..	..
146103	Instrument board carburetor air valve control shaft spring	1	1	1	1	..	..
3912	Washer ($\frac{7}{16}$")	1	1	..	..	..	..
4290	Cotter ($\frac{3}{32}$ x $\frac{5}{8}$")	1	1	..	..	..	..
137651	Instrument board cigar lighter (Casolite type)	1	1	..	..	..	..
183136	Instrument board cigar lighter	..	..	1	1	..	..
190650	Instrument board cigar lighter tip and knob assembly	..	..	..	..	1	1
133303	Instrument board cigar lighter (Cuno type)	1	1	..	..	..	..
187554	Instrument board cigar lighter assembly	..	..	..	..	1	1
132408	Instrument board cigar lighter tip	1	1	1	1	..	..
182377	Instrument board cigar lighter tip	..	..	..	..	1	1
158236	Instrument board clock (Jaeger type)	1	1	1	1	..	..
186879	Instrument board clock (Jaeger type)	..	..	..	..	1	1
158237	Instrument board clock (Waltham type)	1	1	1	1	..	..
158238	Instrument board clock (Bruen type)	1	1	1	1	..	..
190076	Instrument board clock clamp	..	..	..	..	1	1
5895	Screw ($\frac{1}{4}$—28 x $\frac{11}{16}$" fill. hd.)	..	..	..	..	2	2
5502	Lockwasher ($\frac{1}{4}$")	..	..	..	..	2	2
190048	Instrument board clock gasket	..	..	..	..	1	1
169051	Instrument board clock glass (Jaeger)	1	1	1	1	..	..
169050	Instrument board clock glass (Waltham and Jaeger)	1	1	1	1	..	..
194441	Instrument board clock glass	..	..	..	..	1	1
157484	Instrument board control rod ferrule	2	2	..	..	..	..
181098	Instrument board control rod ferrule	..	..	2	2	..	..

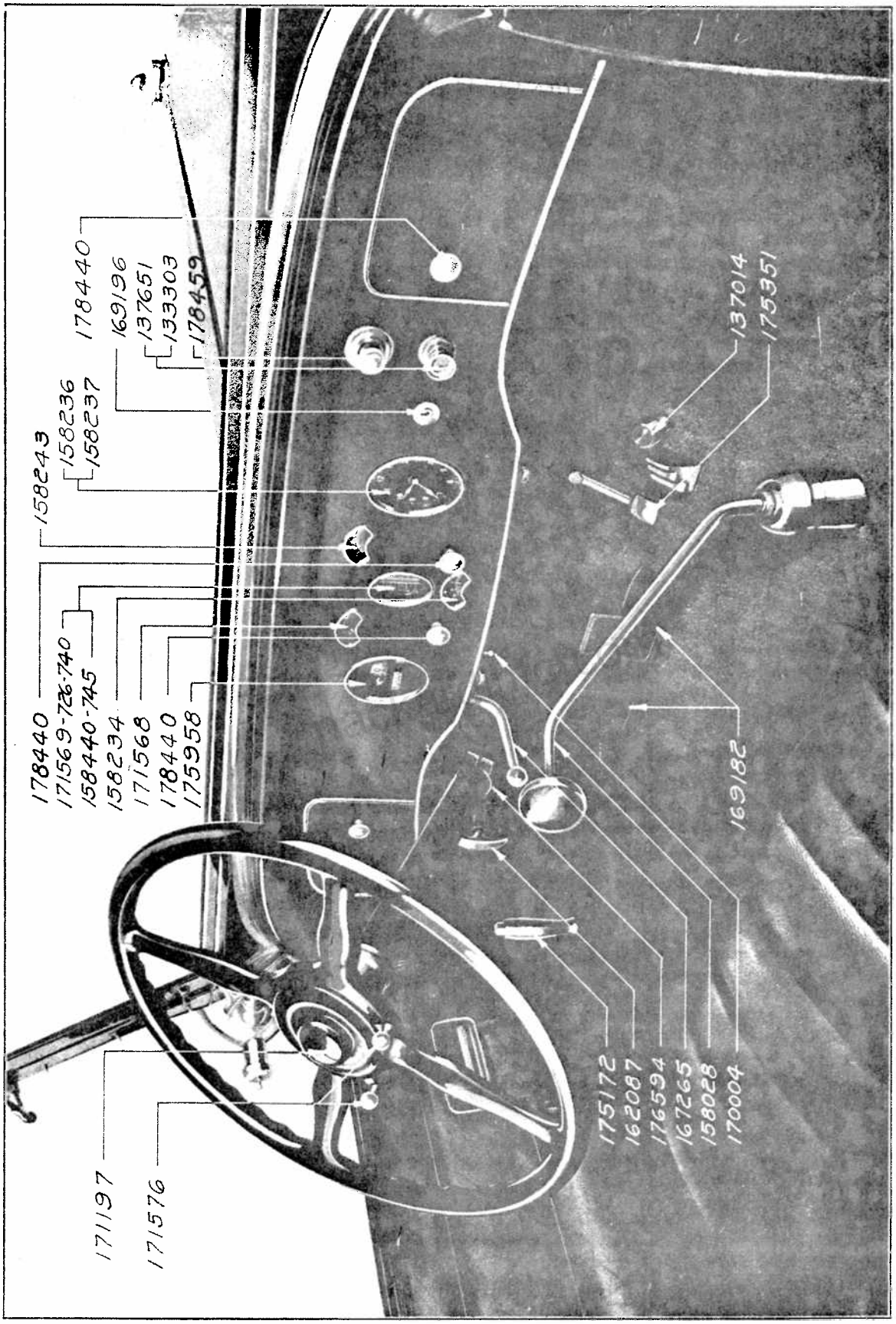

Printed in U. S. A.

Piece No.	Name	No. Required 726 733	740 745	826 833	840 845	901 902	903 904
157675	Instrument board control rod spring	2	2	2	2		
158245	Instrument board cover assembly (for North East speedometer)	1	1	1	1		
7004	Nut (1/4" 28 plain)	5	5	5	5		
162586	Stud (1/4" special)	5	5	5	5		
5502	Lockwasher (1/4")	5	5	5	5		
190053	Instrument board cover assembly—left					1	1
190052	Instrument board cover assembly—right					1	1
171780	Instrument board distributor connecting rod assembly	1		1			
171781	Instrument board distributor connecting rod assembly		1		1		
7523	Yoke end pin (3/16")	1	1	1	1		
170521	Instrument board distributor connecting rod yoke end	1		1			
170520	Instrument board distributor connecting rod yoke end		1		1		
7003	Nut (No. 10—32)	1	1	1	1		
170400	Instrument board distributor connecting rod yoke end pin	1	1	1	1		
4690	Cotter (1/16 x 3/8")	2	2	2	2		
190192	Washer spring (3/16")	2	2	2	2		
170401	Instrument board distributor connecting rod yoke end pin bushing	1	1	1	1		
158258	Instrument board distributor connecting rod bushing	1	1	1	1		
171769	Instrument board distributor control rocker lever	1	1	1	1		
171770	Instrument board distributor control rocker lever bracket	1	1	1	1		
5471	Screw (1/4—28 x 3/4")	2	2	2	2		
5502	Lockwasher (1/4")	2	2	2	2		
7004	Nut (1/4"—28)	2	2	2	2		
4690	Cotter pin (1/16 x 3/8")	2	2	2	2		
171771	Instrument board distributor control rocker lever pin	1	1	1	1		
148462	Spacer	1	1				
171772	Instrument board distributor control rod	1	1	1	1		
7513	Yoke end adjusting (3/16")	1	1	1	1		
7523	Yoke end pin (3/16")	1	1	1	1		
4690	Cotter (1/16 x 3/8")	1	1	1	1		
7003	Nut (No. 10—32)	1	1	1	1		
190192	Washer spring (3/16")	1	1	1	1		
173347	Instrument board distributor control rod knob (ivory)	1	1				
178440	Instrument board distributor control rod knob (green tint)	1	1	1			
180635	Instrument board distributor control rod knob (Beatl)				1		
190001	Instrument board finishing plate assembly						1
190000	Instrument board finishing plate assembly					1	
194852	Instrument board finishing plate gasket					1	1
190391	Instrument board finishing plate lug spring					3	3
3867	Washer—inner					3	3
3866	Washer—outer					3	3
190045	Lock						
	Note: Replacements and returns of all K-S gasoline Telegages should be handled direct with King-Seeley Corp., Ann Arbor, Michigan.						
190047	Instrument board gasoline gauge gasket					1	1
171569	Instrument board gasoline gauge (used on 740)	1	1	1	1		
158440	Instrument board gasoline gauge (used on 745)		1				
186877	Instrument board gasoline gauge					1	1
169053	Instrument board gasoline gauge glass	1	1	1	1		
194442	Instrument board gasoline gauge glass					1	1
158426	Instrument board gasoline gauge and ammeter plate	1	1	1	1		
5310	Screw (No. 8—32 x 1/4" rnd. hd.)	2	2	2	2		
3774	Lockwasher (No. 8)	2	2	2	2		
146955	Instrument board gasoline gauge tube strap clamp (1/4" x 1 13/16")	3	3	3	3	3	3
178623	Instrument board ignition cable bushing	1	1	1	1		
190046	Instrument board ignition cable bushing					1	1
169196	Instrument board ignition coil and switch assembly	1	1				
196851	Instrument board ignition coil and switch assembly			1	1	1	1
7809	Clamp screw (5/16—24 x 7/8" hex. hd.)	2	2	2	2	1	1
5504	Lockwasher (5/16" plain)	1	1	1	1	1	1
7005	Nut (5/16"—24 plain)	1	1	1	1	1	1

packardinfo.com

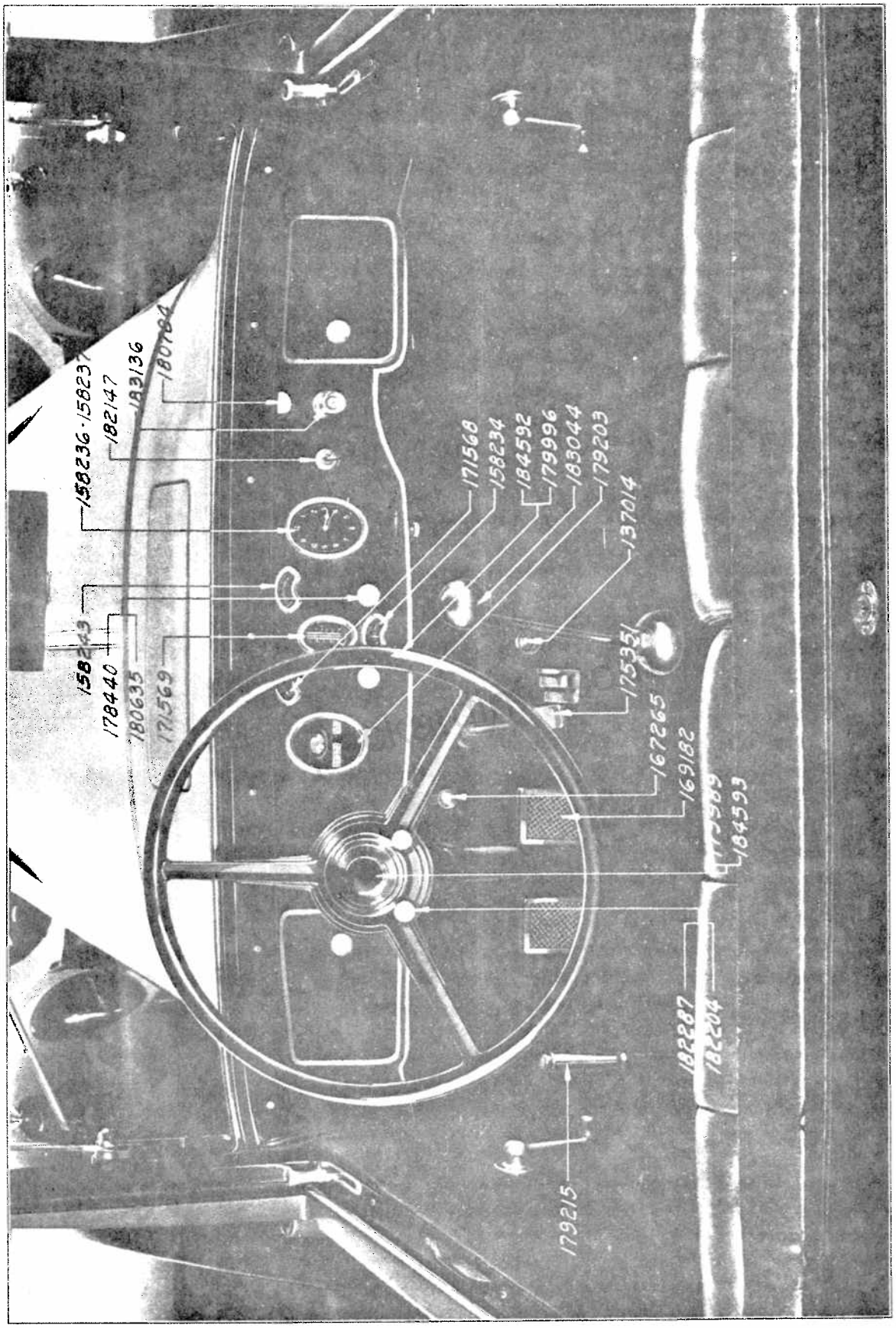

826-833-840-845

Printed in U. S. A.

Piece No.	Name	No. Required 726 733	740 745	826 833	840 845	901 902	903 904
169325	Instrument board ignition coil bracket assembly	1	1				
182130	Instrument board ignition coil bracket assembly			1	1		
190713	Instrument board ignition coil bracket assembly					1	1
190049	Instrument board instrument clamp—left					1	1
190050	Instrument board instrument clamp—right					1	1
190039	Stud					2	2
62065	Washer					4	4
5502	Lockwasher (¼″)					4	4
7004	Nut (¼″—28)					4	4
187295	Instrument board light—direct					1	1
7916	Instrument board light screw (No. 8—32 x 1″ rnd. hd. mach.)					2	2
7002	Instrument board light screw nut (No. 8—32)					2	2
3774	Lockwasher (No. 8)					2	2
128827	Instrument board light base—direct					1	1
195904	Instrument board light cover—direct					1	1
102590	Instrument board light bulb	2	2	2	2	3	3
158407	Instrument board light socket retainer	2	2	2	2		
190042	Instrument board light socket retainer—indirect					2	2
170004	Instrument board light switch	1	1				
182459	Instrument board light switch			1	1		
191172	Instrument board light switch					2	2
5619	Screw (No. 8—32 x 5/16″ flat hd. mach.)	2	2	2	2		
3774	Lockwasher (No. 8)	2	2	2	2		
7002	Nut (No. 8—32 plain)	2	2	2	2		
146283	Instrument board light to switch cable assembly	1	1	1	1		
190110	Instrument board light to switch cable assembly—indirect					1	1
33287	Cable terminal (13/64″ eye)	1	1	1	1	2	2
36111	Terminal insulator	1	1	1	1	2	2
171568	Instrument board motor thermometer assembly	1	1	1	1		
186875	Instrument board motor thermometer assembly					1	1
190047	Gasket					1	1
177314	Instrument board motor thermometer plate	1	1	1	1		
5310	Screw (No. 8—32 x ¼″ rnd. hd.)	1	1	1	1		
3774	Lockwasher No. 8	1	1	1	1		
158243	Instrument board oil gauge	1	1	1	1		
186874	Instrument board oil gauge					1	1
190047	Gasket					1	1
158244	Instrument board oil gauge plate	1	1	1	1		
5310	Screw (No. 8—32 x ¼″ rnd. hd.)	1	1	1	1		
3774	Lockwasher (No. 8)	1	1	1	1		
190030	Instrument board plate assembly					1	1
190088	Instrument board plate screw					10	10
7003	Nut (No. 10—32)					10	10
5500	Washer (3/16″)					10	10
178459	Instrument board reading light	1	1				
180784	Instrument board reading light			1	1		
178667	Instrument board reading light insulated contact assembly	1	1				
173347	Instrument board reading light knob (ivory)	1	1				
178440	Instrument board reading light knob (green tint)	1	1	1			
180635	Instrument board reading light knob (Beatl)				1		
102590	Instrument board reading light bulb	1	1	1	1		
176607	Instrument board reading light plunger assembly	1	1	1	1		
176609	Instrument board reading light plunger socket	1	1	1	1		
176608	Instrument board reading light shade	1	1	1	1		
194526	Instrument board shock absorber control operating rod					1	
194525	Instrument board shock absorber control operating rod						1
5973	Instrument board shock absorber control operating rod bracket screw (¼—28 x ⅜″ hex. hd.)					2	2
5502	Lockwasher (¼″)					2	2

packardinfo.com

Piece No.	Name	No. Required 726 733	740 745	826 833	840 845	901 902	903 904
5470	Instrument board shock absorber control operating rod bracket lower screw (¼—28 x ¾" hex. hd.)					2	2
5502	Lockwasher (¼")					2	2
194008	Instrument board shock absorber control operating rod knob					1	1
194047	Instrument board shock absorber control operating rod knob lock nut					1	1
7524	Yoke end pin (¼")					1	1
194732	Spring washer					1	1
4280	Cotter pin (1/16 x ½")					1	1
5947	Yoke end adjusting (¼")					1	1
7004	Nut (¼"—28)					1	1
5035	Instrument board shock absorber control operating rod plunger ball					1	1
194597	Instrument board shock absorber control operating rod plunger spring					1	1
4291	Cotter pin (3/32 x ¾")					1	1
194537	Instrument board shock absorber control operating rod support tube and bracket assembly (prior to frame No. 345590 and 194175)					1	1
195948	Instrument board shock absorber control operating rod support tube and bracket assembly (after frame No. 345590 and 194175)					1	1

LUBRICATOR

169568	Lubricator-brake front oil tube—left assembly	1	1	1	1		
191228	Lubricator-brake front oil tube—left assembly					1	1
169570	Lubricator-brake front oil tube—right assembly	1	1	1	1		
191226	Lubricator-brake front oil tube—right assembly					1	1
5466	Union nut (5/16" flared)	2	2	2	2		
146405	Lubricator-brake front oil tube elbow (male half)	2	2	2	2	2	2
146404	Lubricator-brake front oil tube elbow (female half)	2	2	2	2		
7004	Nut (¼"—28 plain)	2	2	2	2	2	2
5502	Lockwasher (¼")	2	2	2	2	2	2
196768	Lubricator-brake front oil tube gasket	2	2	2	2	2	2
7706	Lubricator-brake front oil tube screw (No. 10—32 x ½" fill. hd.)	4	4	4	4	4	4
5500	Lockwasher (3/16")	4	4	4	4	4	4
	Brake connecting rod rear inter. lever	2	2				
146265	Lubricator drip plug — Clutch throwout bearing	1	1				
	Brake cross shaft	4	4				
	Rear axle spring front bracket	2	2				
146266	Lubricator drip plug — Front axle spring rear bracket—right	1	1				
	Steering gear case	1	1				
148819	Lubricator drip plug — Front axle spring rear bracket—left	1	1				
	Front axle spring front shackle bracket	2	2				
146267	Lubricator drip plug—Rear axle spring rear shackle bracket	2	2				
146268	Lubricator drip plug — Shock absorber connecting link assembly	4	4				
	Brake front operating shaft support arm bracket	2	2				
	Brake connecting rod rear inter. lever			2	2	2	2
	Clutch throwout bearing			1	1		
182448	Lubricator drip plug — Brake cross shaft			4	4		
	Rear axle spring front bracket			2	2	2	2
	Front axle spring rear bracket—right			1	1	1	1
	Steering gear case			1	1	1	1
182449	Lubricator drip plug—Front axle spring rear bracket—left			1	1	1	1
	Front axle spring front shackle bracket			2	2	2	2
	Rear axle spring rear shackle bracket			2	2	2	2
182450	Lubricator drip plug — Brake front operating shaft support arm bracket			2	2	2	2
	Motor fuel pump frame junction			1	1	1	1
	Universal joint bearing					1	1
	Brake cross shaft					2	2
	Clutch throwout bearing					1	1
194001	Lubricator drip plug — Clutch shifter lever					1	1
	Clutch and brake pedal					1	1
144911	Lubricator frame junction to fuel pump tube clip			1	1	1	1
184610	Lubricator frame junction to fuel pump compression sleeve			1	1	1	1

packardinfo.com

Printed in U. S. A.

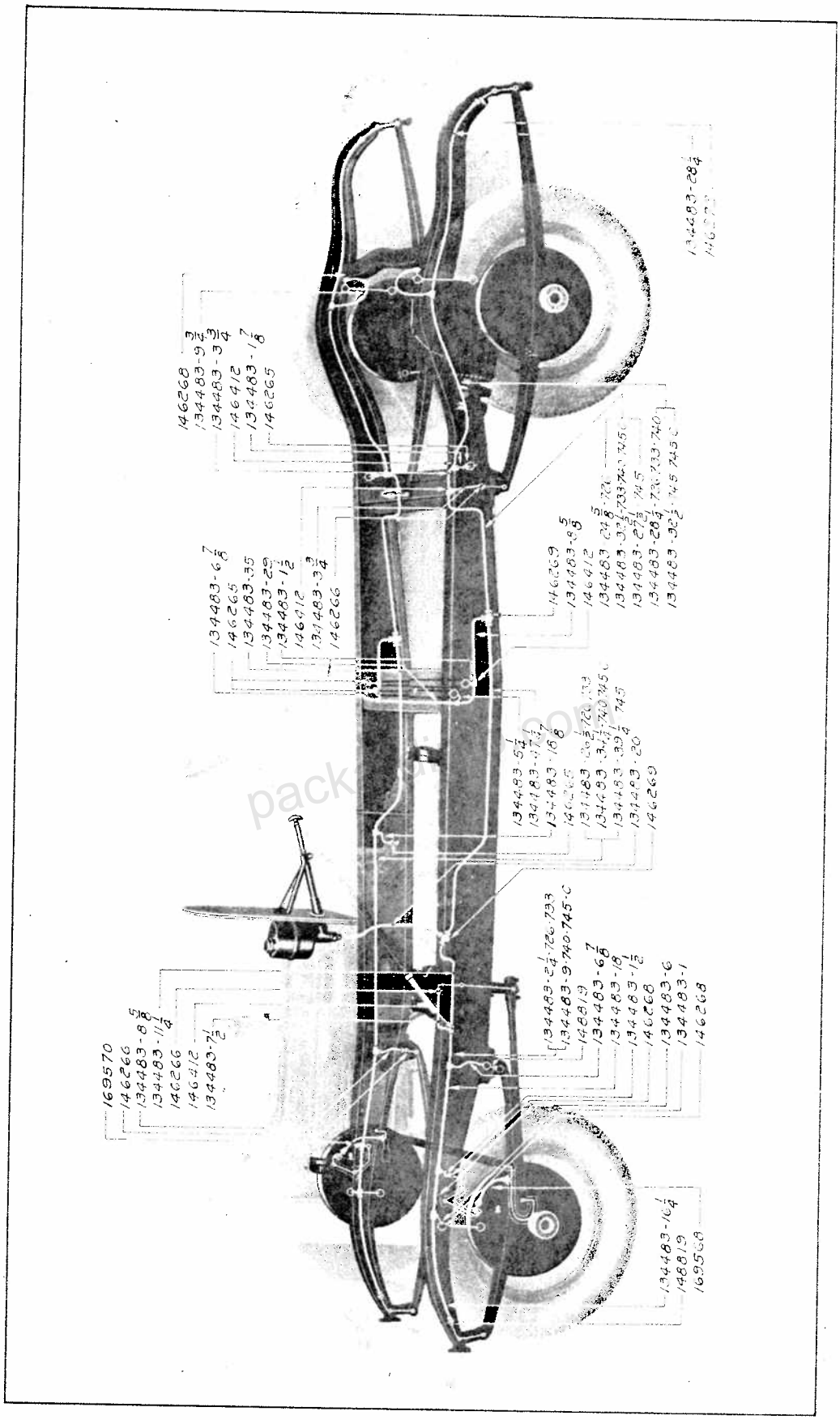

726-733-740-745

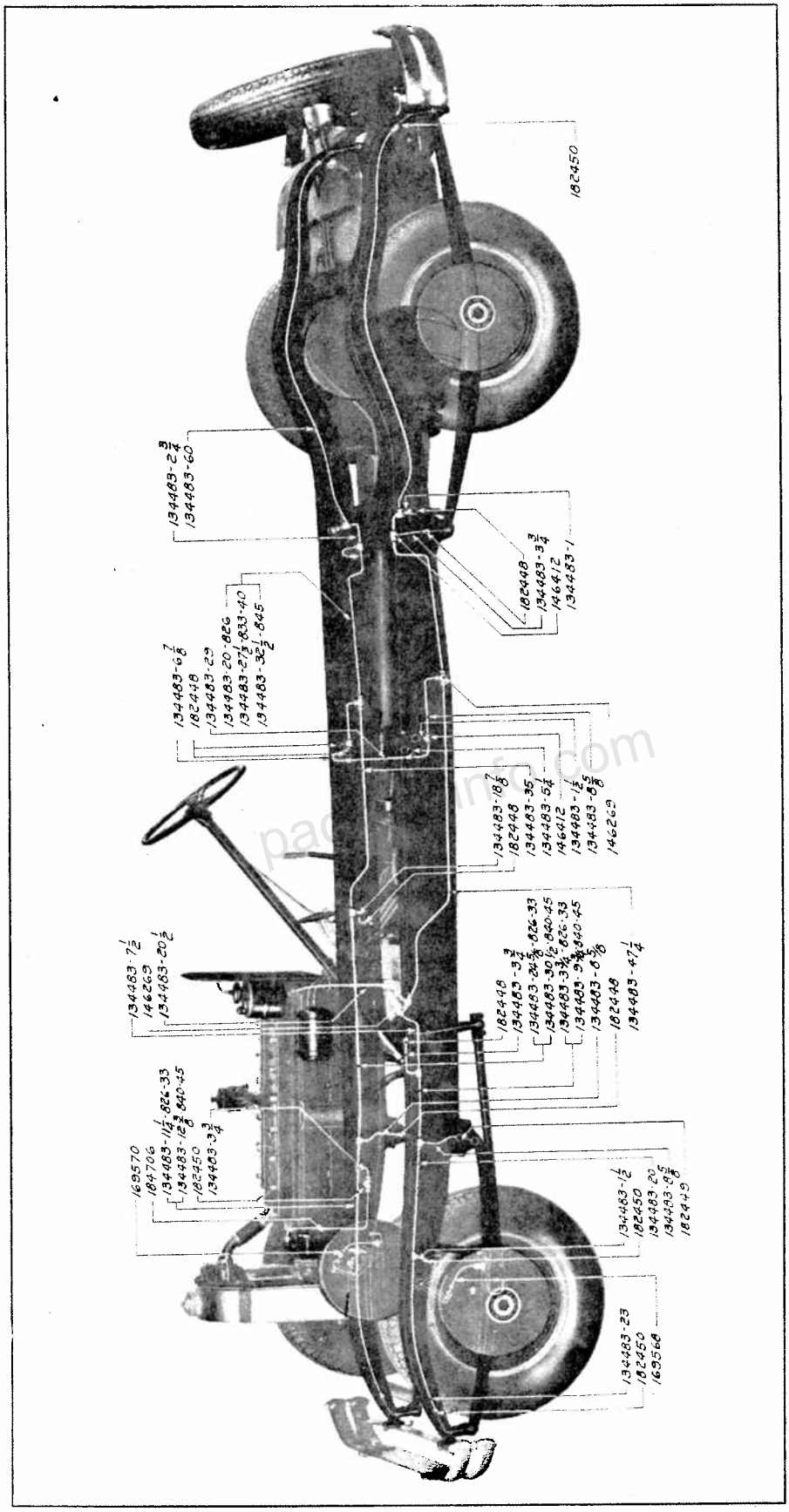

826-833-840-845

Printed in U. S. A.

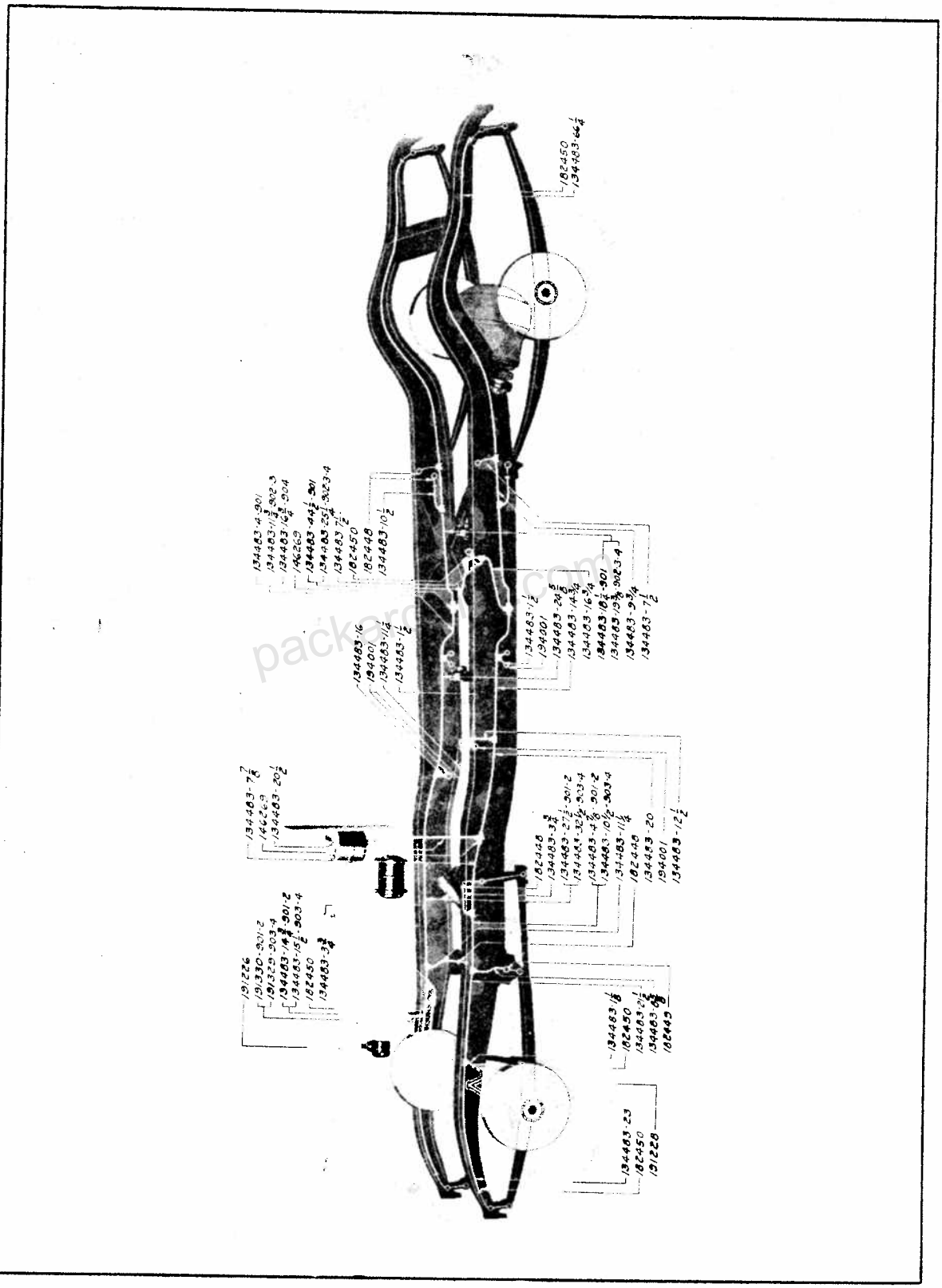

901-902-903-904

packardinfo.com

Piece No.	Name	No. Required 726 733	740 745	826 833	840 845	901 902	903 904
184609	Lubricator frame junction to fuel pump union nut	..	..	1	..	1	..
184611	Lubricator frame junction to fuel pump union nut	..	..	..	1	..	1
164715	Lubricator—front axle spring bracket rear drip plug adapter	1	1	..	..	..	..
164716	Lubricator—front axle spring bracket rear drip plug adapter gasket	1	1	..	..	..	..
7706	Screw (No. 10—32 x ½" fill. hd.)	2	2	..	..	..	..
5500	Lockwasher (3/16")	2	2	..	..	..	..
184717	Lubricator fuel pump tube frame junction	..	..	1	1	1	1
132482	Lubricator—pump bracket	1	1	..	..	..	..
7870	Clamp screw (¼—28 x 5/8" hex. hd.)	1	1	..	..	..	..
7004	Nut (¼"—28 plain)	1	1	..	..	..	..
5502	Lockwasher (¼")	1	1	..	..	..	..
163236	Lubricator pump escutcheon plate	1	1	..	..	..	..
162087	Lubricator pump plunger handle	1	1	..	..	..	..
166886	Lubricator tank and pump (internal repairs not furnished—return to vendor)	1	1	..	..	..	..
182123	Lubricator tank assembly (internal repairs not furnished—return to vendor)	..	..	1	1	1	1
7870	Lubricator tank and pump screw	2	2	..	..	..	..
5483	Lubricator tank screw	..	..	3	3	..	..
5577	Lubricator tank screw (5/16—24 x 7/8" hex. hd.)	..	..	..	..	3	3
5574	Screw (¼—28 x 7/8" hex. hd.)	2	2	..	..	..	..
3877	Washer (3/8" plain)	..	..	3	3	..	..
3874	Washer (5/16" plain)	..	..	..	..	3	3
5502	Lockwasher (¼")	4	4	..	..	..	..
5504	Lockwasher (5/16")	..	..	3	3	3	3
7004	Nut (¼"—28 plain)	4	4	..	..	..	..
7005	Nut (5/16"—24 plain)	..	..	3	3	..	..
185433	Lubricator tank damper connection No. 1	..	..	1	1	1	1
191911	Lubricator tank damper connection No. 2	..	..	1	1	1	1
191912	Lubricator tank damper connection No. 3	..	..	1	1	1	1
157278	Lubricator tank filler cap	1	1	..	..	..	..
185363	Lubricator tank filler cap	..	..	1	1	1	1
157804	Lubricator tank pump barrel assembly	1	1	..	..	..	..
170197	Lubricator tank filter felt	1	1	..	..	..	..
170198	Lubricator tank filter felt gasket	1	1	..	..	..	..
184748	Lubricator tank intake manifold to dash connection suction tube assembly	..	..	1	..	..	..
191704	Lubricator tank intake manifold to dash connection suction tube assembly	..	..	..	..	1	..
184811	Lubricator tank intake manifold to dash connection suction tube assembly	..	..	..	1	..	..
191700	Lubricator tank intake manifold to dash connection suction tube assembly	..	..	..	..	..	1
184331	¼" flared tube connection	..	..	1	..	1	..
169042	¼" flared tube connection	..	..	..	1	..	1
5468	¼" union nut	..	..	..	2	2	2
184333	Union nut	..	..	2	..	..	..
184332	Lubricator tank suction tube long assembly	..	..	1	1	1	1
184333	Union nut	..	..	2	2	2	2
184599	Lubricator tank suction tube short assembly	..	..	1	..	..	..
191149	Lubricator tank suction tube short assembly	..	..	..	..	1	..
184600	Lubricator tank suction tube short assembly	..	..	..	1	..	..
191150	Lubricator tank suction tube short assembly	..	..	..	..	..	1
184610	Lubricator tank suction tube short compression sleeve	..	..	1	1	1	1
157476	Lubricator tank suction tube short union nut	..	..	1	..	1	..
183465	Lubricator tank suction tube short union nut	..	..	..	1	..	1
184609	Lubricator tank suction tube short union nut	..	..	1	..	1	..
184611	Lubricator tank suction tube short union nut	..	..	..	1	..	1
184338	Lubricator tank suction tube dash connection elbow	..	..	1	..	..	..
190919	Lubricator tank suction tube dash connection elbow	..	..	..	..	1	..
184339	Lubricator tank suction tube dash connection elbow	..	..	..	1	..	..
190920	Lubricator tank suction tube dash connection elbow	..	..	..	..	..	1
183153	Lubricator tank suction tube dash connection washer	..	..	1	1	1	1
5049	Washer (3/8" plain)	..	..	1	1	..	..
5843	Lockwasher (5/8")	..	..	1	1	1	1
190916	Lubricator tank suction tube dash connection tee	..	..	..	..	1	1

packardinfo.com

Piece No.	Name	No. Required 726 733	740 745	826 833	840 845	901 902	903 904
190925	Lubricator tank suction tube dash connection tee	..	..	..	..	1	1
5805	Lockwasher	..	..	..	..	1	1
7006	Nut (3/8"—24)	..	..	..	..	1	1
184335	Nut	..	..	1	1	1	1
183015	Lubricator tank suction tube dash connection tee (use with bodies 460-1-2) (481) (for 833 only)	..	..	1	..	..	..
183016	Lubricator tank suction tube dash connection tee (use with bodies 470-1-2) (491) (for 840 only)	..	..	..	1	..	..
182108	Lubricator tank suction tube dash connection tee (use with bodies 463-4-5-6-7-8-9)	..	..	1	..	..	..
182109	Lubricator tank suction tube dash connection tee (use with bodies 473-476-7-8-9 474-475)	..	..	..	1	..	..
147381	Lubricator—transmission drip plug adapter	..	..	..	..	1	1
176926	Lubricator—transmission drip plug oil hole restriction	1	1	1	1	..	..
190383	Lubricator—transmission drip plug oil hole restriction	..	..	..	..	1	1
146272	Lubricator tube compression sleeve	30	30	30	30	31	31
132449	Lubricator tube clip—single	x	x	x	x	x	x
132472	Lubricator tube clip—single	x	x	x	x	x	x
183002	Lubricator tube clip—double	..	..	x	x	..	..
194280	Lubricator tube clip—double	..	..	..	..	x	x
144911	Lubricator tube clip—single—special	x	x	x	x	x	x
183001	Lubricator tube clip—double	..	..	..	x	x	x
184835	Lubricator tube clip—double—special	..	..	..	..	..	x
146583	Lubricator tube clip—double	x	x	..	..	..	..
184478	Lubricator tube clip—double	..	..	x	x	x	x
157711	Lubricator tube clip—double—special	x	x	x	x	..	..
183000	Lubricator tube clip—double	..	..	..	x	x	x
7901	Screw (No. 10—32 x 5/8" rnd. hd.)	x	x	x	x	..	..
7710	Screw (No. 10—32 x 5/8" fill hd.)	..	..	x	x	x	x
7706	Screw (No. 10—32 x 1/2" fill. hd.)	x	x	x	x	..	..
3835	Screw (No. 10—32 x 3/4" fill hd.)	..	..	x	x	..	..
5500	Lockwasher (3/16")	x	x	x	x	x	x
62065	Washer (17/64 x 3/4" plain)	x	x	x	x	..	..
7003	Nut (No. 10—32 plain)	x	x	x	x	x	x
3867	Washer	..	..	x	x	x	x
146269	Lubricator tube junction 3 way	3	3	3	3	3	3
5434	Screw (1/4—28 x 1 5/8" hex. hd.)	2	2	3	3	..	..
8234	Screw (1/4—28 x 1 3/4" flat hd.)	1	1	1	1	..	..
5852	Screw (1/4—28 x 1 7/8" hex. hd.)	..	..	..	..	3	3
7004	Nut (1/4"—28 plain)	3	3	4	4	3	3
5502	Lockwasher (1/4")	3	3	4	4	3	3
170401	Lubricator tube rear grommet	..	..	..	..	4	4
146274	Lubricator tube union nut (drip plug end)	20	20	19	19	20	20
146273	Lubricator tube union nut (junction end)	10	10	11	11	11	11
143360	Lubricator tube tank to junction clip (single)	1	1	1	1	..	..
146412	Lubricator tube tee clamp	18	18	15	15	15	16
134483	Tubing (3/16 x 1/12")	x	x	x	x	x	x

MOTOR ACCELERATOR CONTROL

175351	Motor accelerator pedal	1	1	1	1	..	..
194666	Motor accelerator pedal	..	..	..	..	1	1
114495	Motor accelerator pedal bracket	1	1	1	1	1	1
5506	Lockwasher (3/8")	1	1	1	1	1	1
7006	Nut (3/8"—24 plain)	1	1	1	1	1	1
3877	Washer (3/8" plain)	1	1	1	1	1	1
4023	Taper pin (No. 0 x 3/4")	1	1	1	1	1	1
5806	Lockwasher (7/16")	..	..	..	..	2	2

packardinfo.com

Printed in U. S. A.

Piece No.	Name	No. Required 726 733	740 745	826 833	840 845	901 902	903 904
158157	Motor accelerator pedal bracket cover	1	1	1	1		
5569	Screw (No. 10—32 x 1/2" fill hd. mach)	2	2				
5429	Screw (No. 10—32 x 11/32" fill. hd. mach.)	2	2	2	2		
7003	Nut (No. 10—32 plain)	2	2	2	2		
3868	Washer (1/4" plain)	2	2				
5500	Lockwasher (5/16")	2	2	2	2		
158156	Motor accelerator pedal bracket cover dust washer	2	2	2	2		
190941	Motor accelerator pedal hole cover					1	1
5390	Screw (1/4—28 x 1 3/8" hex hd.)					1	1
5502	Lockwasher (1/4")					1	1
194751	Motor accelerator pedal insulating sleeve					1	1
194752	Motor accelerator pedal insulating washer					2	2
177677	Motor accelerator pedal retracting spring	1	1	1	1	1	1
175470	Motor accelerator pedal shaft	1	1	1	1		
190944	Motor accelerator pedal shaft					1	1
158158	Motor accelerator pedal shaft bracket	2	2	2	2		
158159	Motor accelerator pedal shaft bracket—right					1	1
190952	Motor accelerator pedal shaft bracket—left					1	1
5574	Screw (1/4—28 x 7/8" hex. hd.)	2	2	2	2		
5431	Screw (1/4—28 x 3/4" fill. hd.)			2	2		
5377	Screw (1/4—28 x 1 1/8" hex. hd.)					2	2
5502	Lockwasher (1/4")	2	2	2	2	2	2
62065	Washer (17/64 x 3/4" plain)	1	1	1	1		
7004	Nut (1/4"—24 plain)	2	2	2	2		
185428	Motor accelerator pedal shaft bracket screw cup washer			2	2		
175460	Motor accelerator pedal shaft lever—long	1	1	1	1		
191233	Motor accelerator pedal shaft lever—long					1	1
158154	Motor accelerator pedal shaft lever—short	1	1				
180221	Motor accelerator pedal shaft lever—short			1	1		
191184	Motor accelerator pedal shaft lever—short					1	1
186436	Spring washer (5/16")					1	1
4023	Taper pin (No. 0 x 3/4")	2	2	2	2	2	2

MOTOR CAMSHAFT

170141	Motor camshaft	1		1		1	
170021	Motor camshaft		1		1		1
132735	Motor camshaft bearing, No. 2 assembly	1	1	1	1	1	1
158306	Motor camshaft bearing, No. 3 assembly	1		1		1	
132736	Motor camshaft bearing, No. 3 assembly		1		1		1
132737	Motor camshaft bearing, No. 4 assembly	1	1	1	1	1	1
132738	Motor camshaft bearing, No. 5 assembly	1	1	1	1	1	1
132739	Motor camshaft bearing, No. 6 assembly		1		1		1
158307	Motor camshaft bearing, No. 6 assembly	1		1		1	
132740	Motor camshaft bearing, No. 7 assembly	1	1	1	1	1	1
7706	Motor camshaft bearing screw (No. 10—32 x 1/2" fill. hd.)	12	12	12	12	12	12
170158	Motor camshaft bearing—front	1		1		1	
169046	Motor camshaft bearing—front		1		1		1
158140	Motor camshaft bearing front end adjustment plate	1		1		1	
7857	Screw (5/16"—18 x 1" hex. hd.)	2	2	2	2	2	2
158137	Motor camshaft bearing front screw lock	2		2		2	
5504	Lockwasher (5/16")	2	2	2	2	2	2
158656	Motor camshaft bearing rear	1	1	1	1	1	1
7857	Motor camshaft bearing rear screw (5/16"—18 x 1" hex. hd.)	3	3	3	3	3	3
5504	Lockwasher (5/16")	3	3	3	3	3	3
147237	Motor camshaft bearing rear gasket	1	1	1	1	1	1
131881	Motor camshaft bearing dowel	6	6	6	6	6	6
194034	Motor camshaft driving chain (Morse No. 1866)	1	1	1	1	1	1
179886	Motor camshaft driving chain pin	x	x	x	x		
194547	Motor camshaft driving chain pin					x	x
179887	Motor camshaft driving chain pin bushing	x	x	x	x		

packardinfo.com

Piece No.	Name	No. Required 726 733	740 745	826 833	840 845	901 902	903 904
179888	Motor camshaft driving chain washer	x	x	x	x	..	..
147254	Motor camshaft plug	1	1	..	..	..	..
158723	Motor camshaft rocker lever assembly (stamping)	16	16	16	16	..	..
194738	Motor camshaft rocker lever assembly—right (forging)	..	..	8	8	8	8
194739	Motor camshaft rocker lever assembly—left (forging)	..	..	8	8	8	8
191207	Motor camshaft rocker lever housing	2	..	2	..	2	..
131886	Motor camshaft rocker lever housing	..	2	..	2	..	2
6050	Stud ($\frac{5}{16}$ x 18—$\frac{5}{16}$ x 24 x 2″)	20	20	20	20	20	20
3874	Washer ($\frac{5}{16}$″ plain)	..	20	..	20	..	20
5504	Lockwasher ($\frac{5}{16}$″)	20	20	20	20	20	20
7005	Nut ($\frac{5}{16}$″—24 plain)	20	20	20	20	20	20
158123	Motor camshaft rocker lever housing gasket	2	..	2	..	2	..
131887	Motor camshaft rocker lever housing gasket	..	2	..	2	..	2
130760	Motor camshaft rocker lever housing plug	4	4	4	4	4	4
131630	Gasket ($\frac{9}{16}$″ annular)	4	4	4	4	4	4
158050	Motor camshaft rocker lever pin	2	..	2	..	2	..
131888	Motor camshaft rocker lever pin	..	2	..	2	..	2
186677	Motor camshaft rocker lever spacer (used with forged rocker lever)	..	8	..	8	..	8
158216	Motor camshaft rocker lever spring (use with stamped lever)	8	..	8	..	..	..
150426	Motor camshaft rocker lever spring (use with stamped lever)	..	8	..	8	..	..
3914	Washer ($\frac{1}{2}$″ plain) (use with stamped lever)	16	16	16	16	..	..
169597	Motor camshaft sprocket	1	1	1	1	1	1
3994	Motor camshaft sprocket key ($\frac{1}{4}$—$\frac{3}{16}$ x 1 3/8″)	1	1	1	1	1	1
5446	Cotter pin ($\frac{3}{32}$ x 2″)	1	1	1	1	1	1
147253	Motor camshaft sprocket nut (not used with vacuum pump)	1	1	..	..	..	..

MOTOR CARBURETOR

176824	Motor carburetor assembly	1	..	..	..	..	..
190607	Motor carburetor assembly	..	..	1	..	..	..
176825	Motor carburetor assembly	..	1	..	..	..	..
190491	Motor carburetor assembly	..	..	..	..	1	..
190490	Motor carburetor assembly	..	..	..	..	..	1
190608	Motor carburetor assembly	..	..	..	1	..	..
177204	Motor carburetor adjusting screw	1	1	1	1	..	..
97980	Motor carburetor air cleaner equipment	1	..	..	..	..	..
97981	Motor carburetor air cleaner equipment	..	1	..	..	..	..
177282	Motor carburetor air cleaner	1	..	..	..	..	..
177283	Motor carburetor air cleaner	..	1	..	..	..	..
185426	Motor carburetor air cleaner (Air Maze)	..	..	..	..	1	..
185427	Motor carburetor air cleaner (Air Maze)	..	..	..	..	..	1
97956	Motor carburetor air cleaner equipment	..	..	1	..	..	..
97957	Motor carburetor air cleaner equipment	..	..	..	1	..	..
97947	Motor carburetor air cleaner connecting tube	..	..	1	..	..	..
5429	Motor carburetor air deflector retaining screw (No. 10—32 x $\frac{11}{32}$″ fill. hd. mach.)	1	1	1	1	..	..
177227	Motor carburetor air shield assembly	1	..	1	..	..	..
177228	Motor carburetor air shield assembly	..	1	..	1	..	..
176826	Motor carburetor air valve to motor piston lubricator valve rod assembly	1	..	..	..	..	..
182349	Motor carburetor air valve to motor piston lubricator valve rod assembly	..	..	1	..	..	..
176829	Motor carburetor air valve to motor piston lubricator valve rod assembly	..	1	..	..	..	..
182350	Motor carburetor air valve to motor piston lubricator valve rod assembly	..	..	..	1	..	..
5416	Nut (No. 10—32)	..	2	..	2	..	..
7003	Nut (No. 10—32)	2	..	2	..	..	..
5500	Lockwasher ($\frac{3}{16}$″)	1	1	1	1	..	..
7523	Yoke end pin ($\frac{3}{16}$″)	1	1	1	1	..	..
4690	Cotter ($\frac{1}{16}$ x $\frac{3}{8}$″)	1	1	1	1	..	..
190192	Washer—(spring $\frac{3}{16}$″)	1	1	1	1	..	..
114775	Motor carburetor air valve to motor lubricator valve rod ball joint	1	..	1	..	..	..
143143	Motor carburetor air valve to motor piston lubricator valve rod ball joint	..	1	..	1	..	..
191153	Motor carburetor air valve lever and pin assembly	..	..	..	..	1	1
191155	Motor carburetor air valve lever bracket and pin assembly	..	..	..	..	1	1
5832	Stud ($\frac{5}{16}$″)	..	..	..	..	2	2
7005	Nut ($\frac{5}{16}$″—24)	..	..	..	..	2	2
5504	Lockwasher ($\frac{5}{16}$″)	..	..	..	..	2	2

packardinfo.com

Printed in U. S. A.

Piece No.	Name	No. Required 726 733	740 745	826 833	840 845	901 902	903 904
157438	Motor carburetor air valve lever bracket gasket					1	1
190291	Motor carburetor air valve lever bracket pin spring washer					1	1
3908	Washer ($\frac{5}{16}$")					1	1
5198	Screw (No. 10 32 x $\frac{5}{8}$" hex. hd.)					1	1
5500	Lockwasher ($\frac{3}{16}$")					1	1
4280	Cotter pin ($\frac{1}{16}$ x $\frac{1}{2}$")					1	1
157691	Motor carburetor air valve lever bracket tee					1	1
177237	Motor carburetor air valve piston	1		1			
194703	Motor carburetor air valve piston					1	
194704	Motor carburetor air valve piston						1
185069	Motor carburetor air valve piston and screen assembly		1		1		
191139	Motor carburetor air valve rod assembly					1	
191142	Motor carburetor air valve rod assembly						1
7523	Yoke end pin ($\frac{3}{16}$")					1	1
4690	Cotter pin ($\frac{1}{16}$ x $\frac{3}{8}$")					1	1
190192	Spring washer					1	1
5416	Nut (No. 10—32)						2
7003	Nut (No. 10—32)					2	
5500	Lockwasher					1	1
114775	Motor carburetor air valve rod ball joint (No. 10—32)					1	
143143	Motor carburetor air valve rod ball joint (No. 10—32)						1
177235	Motor carburetor air valve stem spring	1		1		1	
177236	Motor carburetor air valve stem spring		1		1		
194709	Motor carburetor air valve stem spring						1
177231	Motor carburetor aspirating tube	1		1			
179279	Motor carburetor aspirating tube No. 37		1		1		
194707	Motor carburetor aspirating tube					1	
194684	Motor carburetor aspirating tube						1
194700	Motor carburetor aspirating tube jet					1	
194701	Motor carburetor aspirating tube jet						1
177268	Motor carburetor body	1		1			
194711	Motor carburetor body					1	
177269	Motor carburetor body		1		1		
194710	Motor carburetor body						1
177253	Motor carburetor (lower) body gasket	1		1		1	
177254	Motor carburetor (lower) body gasket		1		1		1
177226	Motor carburetor check valve assembly	1	1	1	1	1	1
177240	Motor carburetor drain plug	1	1			1	
184962	Motor carburetor drain plug			1	1		1
177255	Motor carburetor drain plug gasket	1	1	1	1	1	1
183482	Motor carburetor drain tube assembly	1	1				
184813	Motor carburetor drain tube assembly			1			
191250	Motor carburetor drain tube assembly					1	
184815	Motor carburetor drain tube assembly				1		
191248	Motor carburetor drain tube assembly						1
184348	Motor carburetor drain tube connection			1		1	1
102507	Motor carburetor drain tube grommet			1	1		
177277	Motor carburetor float assembly	1	1	1	1	1	1
177210	Motor carburetor float chamber cover	1		1		1	
177211	Motor carburetor float chamber cover		1		1		1
191756	Motor carburetor float cover						1
177247	Motor carburetor float cover gasket	1		1			
191734	Motor carburetor float cover gasket					1	
177248	Motor carburetor float cover gasket		1		1		
191755	Motor carburetor float cover gasket						1
177273	Motor carburetor float cover screw	3	3	3	3	3	3
5225	Motor carburetor float cover screw lockwasher	3	3	3	3	3	3
177249	Motor carburetor float hinge pin	1		1		1	
177250	Motor carburetor float hinge pin		1		1		1
177218	Motor carburetor float valve seat	1					
184965	Motor carburetor float valve seat			1	1		

packardinfo.com

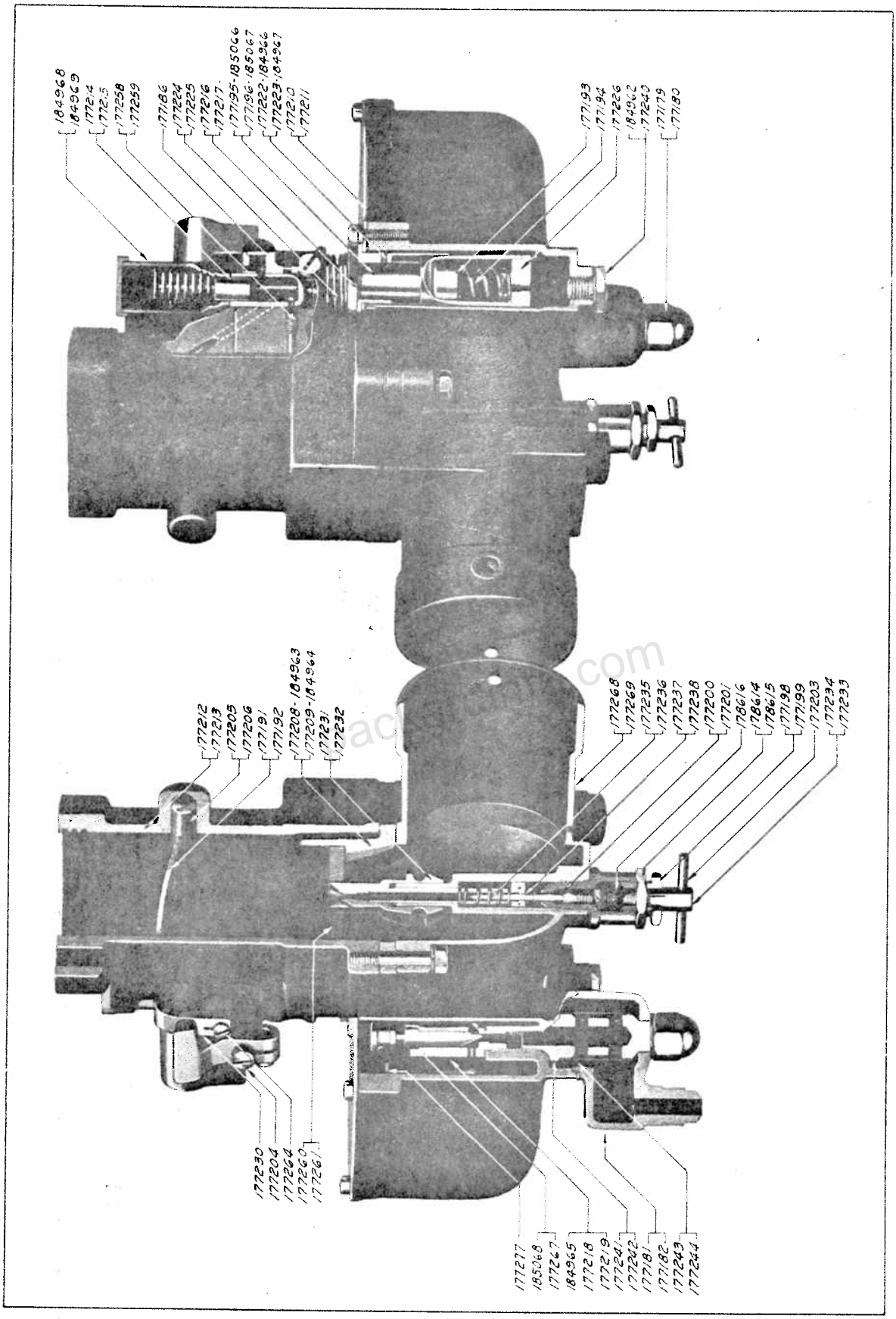

726-733-740-745
826-833-840-845

Printed in U. S. A.

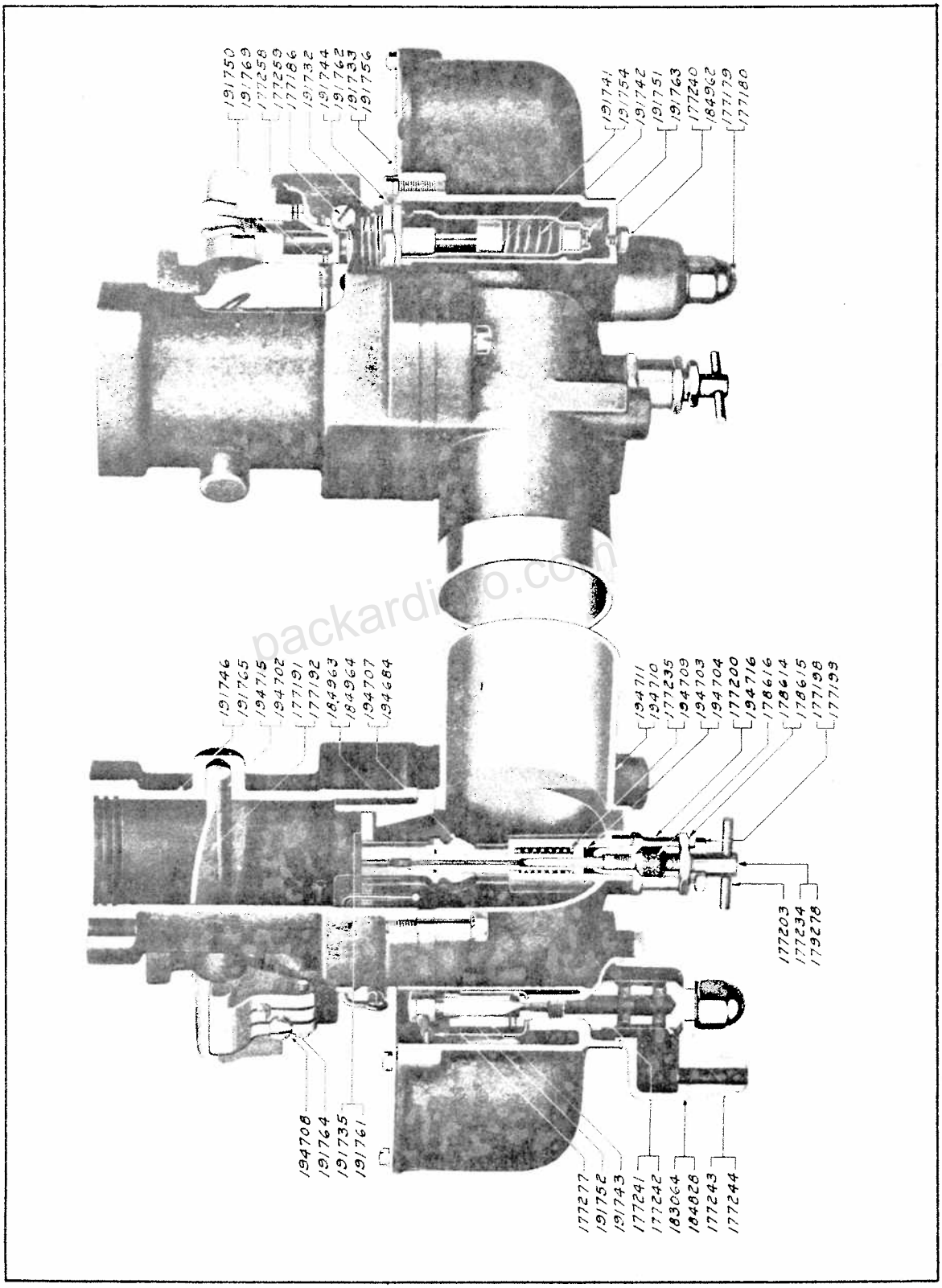

packardinfo.com

Printed in U. S. A.

packardinfo.com

Piece No.	Name	No. Required 726 733	740 745	826 833	840 845	901 902	903 904
191743	Motor carburetor float valve seat					1	
172219	Motor carburetor float valve seat		1				
169577	Motor carburetor gasket	1					
182340	Motor carburetor gasket			1		1	
169578	Motor carburetor gasket		1				
182341	Motor carburetor gasket				1		1
141441	Motor carburetor stud		2				
184985	Motor carburetor stud				2		2
177297	Motor carburetor stud	2		2		2	
5506	Lockwasher ($\frac{3}{8}$")	2		2		2	
5508	Lockwasher ($\frac{7}{16}$")		2		2		2
7006	Nut ($\frac{3}{8}$"- 24)	2		2		2	
7007	Nut ($\frac{7}{16}$"- 20)		2		2		2
177207	Motor carburetor gear retaining screw	1	1	1	1	1	1
177264	Motor carburetor kicker screw	1	1	1	1	1	1
191764	Motor carburetor kicker screw						1
179278	Motor carburetor metering pin assembly No. 12		1		1		1
177234	Motor carburetor metering pin assembly No. 14	1		1		1	
177198	Motor carburetor metering pin gland	1		1		1	
177199	Motor carburetor metering pin gland		1		1		1
178614	Motor carburetor metering pin gland retaining nut	1		1		1	
178615	Motor carburetor metering pin gland retaining nut		1		1		1
177200	Motor carburetor metering pin guide	1		1		1	
177201	Motor carburetor metering pin guide		1		1		
194716	Motor carburetor metering pin guide						1
177265	Motor carburetor metering pin guide gasket	1		1		1	
177266	Motor carburetor metering pin guide gasket		1		1		
194826	Motor carburetor metering pin guide gasket						1
178616	Motor carburetor metering pin packing	1	1	1	1	1	1
177203	Motor carburetor metering pin stem handle	1	1	1	1	1	1
191733	Motor carburetor name plate					1	
177267	Motor carburetor needle valve and collar assembly	1	1				
185068	Motor carburetor needle valve and collar assembly			1	1	1	1
177255	Motor carburetor needle seat gasket	1		1		1	
177256	Motor carburetor needle seat gasket		1		1		1
177220	Motor carburetor pump assembly	1		1			
177221	Motor carburetor pump assembly		1		1		
191760	Motor carburetor pump cup retainer packing						1
177195	Motor carburetor pump cylinder	1					
185066	Motor carburetor pump cylinder			1			
191749	Motor carburetor pump cylinder and sleeve assembly					1	
191768	Motor carburetor pump cylinder and sleeve assembly						1
177196	Motor carburetor pump cylinder		1				
185067	Motor carburetor pump cylinder				1		
177258	Motor carburetor pump discharge nozzle	1		1		1	
177259	Motor carburetor pump discharge nozzle		1		1		1
191740	Motor carburetor pump felt					1	
191739	Motor carburetor pump felt retainer					1	
177230	Motor carburetor pump gear	1	1	1	1	1	1
177186	Motor carburetor pump housing screw	1	1				
191738	Motor carburetor pump packing washer					1	
191759	Motor carburetor pump packing washer						1
191754	Motor carburetor pump piston						1
177193	Motor carburetor pump piston	1	1	1	1		
191741	Motor carburetor pump piston					1	
177194	Motor carburetor pump piston spring	1	1	1	1		
191742	Motor carburetor pump piston spring					1	
191750	Motor carburetor pump plunger and rod assembly					1	
191769	Motor carburetor pump plunger and rod assembly						1
191737	Motor carburetor pump shell gasket					1	
191758	Motor carburetor pump shell gasket						1

packardinfo.com

Piece No.	Name	No. Required 726 733	740 745	826 833	840 845	901 902	903 904
191751	Motor carburetor pump shell and retainer assembly	..	..	..	..	1	..
191763	Motor carburetor pump shell and retainer assembly	..	..	..	..	..	1
177222	Motor carburetor pump sleeve	1	..	..	..	..	..
184966	Motor carburetor pump sleeve	..	..	1	..	..	..
177223	Motor carburetor pump sleeve	..	1	..	..	..	..
184967	Motor carburetor pump sleeve	..	..	..	1	..	..
177214	Motor carburetor rack assembly	1	..	1	..	1	..
177215	Motor carburetor rack assembly	..	1	..	1	..	1
184968	Motor carburetor rack cover assembly	..	..	1	..	1	..
184969	Motor carburetor rack cover assembly	..	..	..	1	..	1
190481	Motor carburetor silencer and air cleaner assembly	..	..	..	..	1	..
186659	Motor carburetor silencer and air cleaner assembly	..	..	..	..	..	1
191529	Motor carburetor silencer and air cleaner tube	..	..	..	..	1	..
191530	Motor carburetor silencer and air cleaner tube	..	..	..	..	..	1
191538	Motor carburetor silencer and air cleaner tube screw	..	..	..	..	2	2
5504	Lockwasher ($\frac{5}{16}$")	..	..	..	..	2	2
191535	Motor carburetor silencer and air cleaner tube clamping screw	..	..	..	..	1	1
5502	Lockwasher ($\frac{1}{4}$")	..	..	..	..	1	1
7004	Nut ($\frac{1}{4}$"—28)	..	..	..	..	1	1
191068	Motor carburetor silencer and air cleaner support	..	..	..	..	..	1
191069	Motor carburetor silencer and air cleaner support	..	..	..	..	1	..
5922	Screw ($\frac{1}{4}$—28 x $\frac{1}{2}$" hex. hd)	..	..	..	..	1	1
5502	Lockwasher ($\frac{1}{4}$")	..	..	..	..	1	1
177181	Motor carburetor strainer housing	1	..	..	..	..	..
183064	Motor carburetor strainer housing	..	..	1	..	1	..
177182	Motor carburetor strainer housing	..	1	..	..	..	..
184828	Motor carburetor strainer housing	..	..	..	1	..	1
177245	Motor carburetor strainer housing gasket	1	..	1	..	1	..
177246	Motor carburetor strainer housing gasket	..	1	..	1	..	1
177179	Motor carburetor strainer housing nut	1	..	1	..	1	..
177180	Motor carburetor strainer housing nut	..	1	..	1	..	1
177243	Motor carburetor strainer housing screen	1	..	1	..	1	..
177244	Motor carburetor strainer housing screen	..	1	..	1	..	1
177241	Motor carburetor strainer housing stud	1	..	1	..	1	..
177242	Motor carburetor strainer housing stud	..	1	..	1	..	1
177216	Motor carburetor starter lever	1	..	1	..	..	..
191744	Motor carburetor starter lever	..	..	..	..	1	..
177217	Motor carburetor starter lever	..	1	..	1	..	..
191762	Motor carburetor starter lever	..	..	..	..	..	1
177224	Motor carburetor starter lever spring	1	..	1	..	..	..
191732	Motor carburetor starter lever spring	..	..	..	..	1	..
177225	Motor carburetor starter lever spring	..	1	..	1	..	..
177274	Motor carburetor throttle adjusting screw	1	1	1	1	1	1
177212	Motor carburetor throttle body	1	..	1	..	..	..
191746	Motor carburetor throttle body	..	..	..	..	1	..
177213	Motor carburetor throttle body	..	1	..	1	..	..
191765	Motor carburetor throttle body	..	..	..	..	..	1
5379	Motor carburetor throttle body cap screw ($\frac{1}{4}$—28 x $\frac{13}{16}$" hex. hd.)	2	4	2	4	..	..
194708	Motor carburetor throttle body screw	..	..	..	..	2	4
177251	Motor carburetor throttle body gasket	1	..	1	..	1	..
177252	Motor carburetor throttle body gasket	..	1	..	1	..	1
5502	Motor carburetor throttle body screw lockwasher	2	4	..	..	..	..
177191	Motor carburetor throttle plate	1	..	1	..	1	..
177192	Motor carburetor throttle plate	..	1	..	1	..	1
177197	Motor carburetor throttle plate screw	2	2	2	2	2	2
177205	Motor carburetor throttle shaft assembly	1	..	..	..	..	..
194715	Motor carburetor throttle shaft assembly	..	..	..	..	1	..
184970	Motor carburetor throttle shaft assembly	..	..	1	..	..	..
194702	Motor carburetor throttle shaft assembly	..	..	..	..	..	1
177206	Motor carburetor throttle shaft assembly	..	1	..	1	..	..
175447	Motor carburetor throttle valve control shaft	1	..	1	..	..	..

packardinfo.com

Piece No.	Name	No. Required 726 733	740 745	826 833	840 845	901 902	903 904
190499	Motor carburetor throttle valve control shaft					1	
176822	Motor carburetor throttle valve control shaft		1		1		
191183	Motor carburetor throttle valve control shaft						1
175449	Motor carburetor throttle valve control shaft bracket	1					
190496	Motor carburetor throttle valve control shaft bracket					1	
184742	Motor carburetor throttle valve control shaft bracket			1			
190495	Motor carburetor throttle valve control shaft bracket						1
175469	Motor carburetor throttle valve control shaft bracket		1				
184743	Motor carburetor throttle valve control shaft bracket				1		
7714	Screw ($\frac{1}{4}$—28 x $\frac{3}{4}$" fill. hd. mach.)	2	2				
5586	Screw ($\frac{1}{4}$—28 x $\frac{3}{4}$" fill. hd. mach.)			2	2		2
5932	Screw ($\frac{1}{4}$—28 x $1\frac{3}{16}$" fill. hd. mach.)					2	
5502	Lockwasher ($\frac{1}{4}$")	2	2	2	2	2	2
175446	Motor carburetor throttle valve control shaft collar	1	1	1	1	1	1
4023	Taper pin (No. 0 x $\frac{3}{8}$")	1	1	1	1	1	1
172990	Motor carburetor throttle valve control shaft connecting rod	1					
184805	Motor carburetor throttle valve control shaft connecting rod			1			
191112	Motor carburetor throttle valve control shaft connecting rod					1	
169157	Motor carburetor throttle valve control shaft connecting rod (used on 745)		1				
184807	Motor carburetor throttle valve control shaft connecting rod				1		
191113	Motor carburetor throttle valve control shaft connecting rod						1
169156	Motor carburetor throttle valve control shaft connecting rod (used on 740)		1				
114775	Motor carburetor throttle valve control shaft connecting rod ball joint (used on 726-733-740)	2	2	2		2	
143143	Ball joint (used on 745)		2		2		2
7003	Nut (No. 10—32 plain)	4	4	4	4	4	4
5500	Lockwasher ($\frac{3}{16}$")	2	2	2	2	2	2
114782	Motor carburetor throttle valve control shaft coupling lever	1	1	1	1	1	1
4023	Taper pin (No. 0 x $\frac{3}{4}$")	1	1	1	1	1	1
167787	Motor carburetor throttle valve control shaft lever	1	1	1	1		
191182	Motor carburetor throttle valve control shaft lever					1	1
4023	Taper pin (No. 0 x $\frac{3}{4}$")	1	1	1	1	1	1
177260	Motor carburetor vane	2		2			
191735	Motor carburetor vane					2	
177261	Motor carburetor vane		2		2		
191761	Motor carburetor vane						2
177208	Motor carburetor vane box	1					
184963	Motor carburetor vane box			1		1	
177209	Motor carburetor vane box		1				
184964	Motor carburetor vane box				1		1
191766	Motor carburetor vane check assembly						1
191748	Motor carburetor vane check assembly					1	
191747	Motor carburetor vane check bushing					1	
191736	Motor carburetor vane check spring					1	
191757	Motor carburetor vane check spring						1
177270	Motor carburetor vane check washer					1	
177262	Motor carburetor vane hinge pin	2		2		2	
177263	Motor carburetor vane hinge pin		2		2		2

MOTOR CONNECTING ROD AND PISTON

Note: When replacing connecting rod crankshaft bushing, return old rod to be replaced.

170135	Motor connecting rod and bushing assembly (for cylinder 1-3-5-7)	4		4			
186647	Motor connecting rod and bushing assembly (for cylinder 1-3-5-7)					4	
97731	Motor connecting rod and bushing assembly (for cylinder 1-3-5-7) (.015" undersize)	4		4			
194350	Motor connecting rod and bushing assembly (for cylinder 1-3-5-7) (.015" undersize)					4	
170136	Motor connecting rod and bushing assembly (for cylinder 2-4-6-8)	4		4			

packardinfo.com

Piece No.	Name	No. Required 726 733	740 745	826 833	840 845	901 902	903 904
186648	Motor connecting rod and bushing assembly (for cylinder 2-4-6-8)					4	
97732	Motor connecting rod and bushing assembly (for cylinder 2-4-6-8) (.015″ undersize)	4		4			
194351	Motor connecting rod and bushing assembly (for cylinder 2-4-6-8) (.015″ undersize)						4
170124	Motor connecting rod and bushing assembly		8		8		
186651	Motor connecting rod and bushing assembly						8
97730	Motor connecting rod and bushing assembly (.015″ undersize)		8		8		
194352	Motor connecting rod and bushing assembly (.015″ undersize)						8
163000	Motor connecting rod bolt		16		16		16
186645	Motor connecting rod bolt					16	
4291	Cotter ($\frac{3}{32}$ x $\frac{3}{4}$″)		16		16		16
4290	Cotter ($\frac{3}{32}$ x $\frac{5}{8}$″)					16	
162979	Nut		16		16		16
147463	Nut					16	
184578	Motor connecting rod screw	16		16			
5506	Lockwasher ($\frac{3}{8}$″)	16		16			
166698	Motor connecting rod piston pin bushing (.002″ oversize) (on outside diameter)	x		x		x	
156494	Motor connecting rod piston pin bushing (.002″ oversize) (on outside diameter)		x		x		x
156648	Motor connecting rod piston pin bushing		8		8		8
158222	Motor connecting rod piston pin bushing	8		8		8	
	Note: See trade letter No. 2116 for identifying colors of oversize pistons, rings and pins. The piston assemblies include pistons, rings, pins and lock wires fitted.						
163181	Motor piston assembly (standard)	8		8			
194370	Motor piston assembly (standard)					8	
148798	Motor piston assembly (standard)		8		8		
194378	Motor piston assembly (standard)						8
163182	Motor piston assembly (.003″ oversize)	8		8			
194371	Motor piston assembly (.003″ oversize)					8	
148786	Motor piston assembly (.003″ oversize)		8		8		
194379	Motor piston assembly (.003″ oversize)						8
148785	Motor piston assembly (.005″ oversize)		8		8		
194372	Motor piston assembly (.005″ oversize)					8	
163183	Motor piston assembly (.005″ oversize)	8		8			
194380	Motor piston assembly (.005″ oversize)						8
148784	Motor piston assembly (.010″ oversize)		8		8		
194373	Motor piston assembly (.010″ oversize)					8	
163184	Motor piston assembly (.010″ oversize)	8		8			
194381	Motor piston assembly (.010″ oversize)						8
148783	Motor piston assembly (.015″ oversize)		8		8		
194382	Motor piston assembly (.015″ oversize)						8
163185	Motor piston assembly (.015″ oversize)	8		8			
194374	Motor piston assembly (.015″ oversize)					8	
148782	Motor piston assembly (.020″ oversize)		8		8		
194383	Motor piston assembly (.020″ oversize)						8
163186	Motor piston assembly (.020″ oversize)	8		8			
194375	Motor piston assembly (.020″ oversize)					8	
148781	Motor piston assembly (.030″ oversize)		8		8		
194384	Motor piston assembly (.030″ oversize)						8
163187	Motor piston assembly (.030″ oversize)	8		8			
194376	Motor piston assembly (.030″ oversize)					8	
148780	Motor piston assembly (.045″ oversize)		8		8		
194385	Motor piston assembly (.045″ oversize)						8
163188	Motor piston assembly (.045″ oversize)	8		8			
194377	Motor piston assembly (.045″ oversize)					8	
134021	Motor piston pin (standard)		8		8		8
158042	Motor piston pin (standard)	8		8		8	
134305	Motor piston pin (.003″ oversize)		8		8		8
163879	Motor piston pin (.003″ oversize)	8		8		8	

packardinfo.com

Piece No.	Name	No. Required 726 733	740 745	826 833	840 845	901 902	903 904
134306	Motor piston pin (.006″ oversize)	..	8	..	8	..	8
163880	Motor piston pin (.006″ oversize)	8	..	8	..	8	..
190021	Motor piston pin lock	16	16	16	16	16	16
179236	Motor piston ring (standard)—plain	..	24	..	24	..	24
185365	Motor piston ring (standard)—plain	24	..	24	..	24	..
191819	Motor piston ring (standard)—slotted	..	8	..	8	..	..
186055	Motor piston ring (standard)—slotted	..	..	..	..	..	8
191811	Motor piston ring (standard)—slotted	8	..	8	..	..	..
186662	Motor piston ring (standard)—slotted	..	..	..	..	8	..
163881	Motor piston ring (.003″ oversize)—plain	24	..	24	..	24	..
179864	Motor piston ring (.003″ oversize)—plain	..	24	..	24	..	24
191812	Motor piston ring (.003″ oversize)—slotted	8	..	8	..	..	..
194400	Motor piston ring (.003″ oversize)—slotted	..	..	..	..	..	8
191820	Motor piston ring (.003″ oversize)—slotted	..	8	..	8	..	..
194407	Motor piston ring (.003″ oversize)—slotted	..	..	..	..	..	8
179866	Motor piston ring (.005″ oversize)—plain	..	24	..	24	..	24
163882	Motor piston ring (.005″ oversize)—plain	24	..	24	..	24	..
191821	Motor piston ring (.005″ oversize)—slotted	..	8	..	8	..	..
194408	Motor piston ring (.005″ oversize)—slotted	..	..	..	..	..	8
191813	Motor piston ring (.005″ oversize)—slotted	8	..	8	..	..	..
194401	Motor piston ring (.005″ oversize)—slotted	..	..	..	..	8	..
179868	Motor piston ring (.010″ oversize)—plain	..	24	..	24	..	24
164630	Motor piston ring (.010″ oversize)—plain	24	..	24	..	24	..
191822	Motor piston ring (.010″ oversize)—slotted	..	8	..	8	..	..
194409	Motor piston ring (.010″ oversize)—slotted	..	..	..	..	..	8
191814	Motor piston ring (.010″ oversize)—slotted	8	..	8	..	..	..
194402	Motor piston ring (.010″ oversize)—slotted	..	..	..	..	8	..
179870	Motor piston ring (.015″ oversize)—plain	..	24	..	24	..	24
164631	Motor piston ring (.015″ oversize)—plain	24	..	24	..	24	..
191823	Motor piston ring (.015″ oversize)—slotted	..	8	..	8	..	..
194410	Motor piston ring (.015″ oversize)—slotted	..	..	..	..	..	8
191815	Motor piston ring (.015″ oversize)—slotted	8	..	8	..	..	..
194403	Motor piston ring (.015″ oversize)—slotted	..	..	..	..	8	..
179872	Motor piston ring (.020″ oversize)—plain	..	24	..	24	..	24
164632	Motor piston ring (.020″ oversize)—plain	24	..	24	..	24	..
191824	Motor piston ring (.020″ oversize)—slotted	..	8	..	8	..	..
194411	Motor piston ring (.020″ oversize)—slotted	..	..	..	..	..	8
191816	Motor piston ring (.020″ oversize)—slotted	8	..	8	..	..	..
194404	Motor piston ring (.020″ oversize)—slotted	..	..	..	..	8	..
179874	Motor piston ring (.030″ oversize)—plain	..	24	..	24	..	24
164633	Motor piston ring (.030″ oversize)—plain	24	..	24	..	..	..
194391	Motor piston ring (.030″ oversize)—plain	..	..	..	..	24	..
191825	Motor piston ring (.030″ oversize)—slotted	..	8	..	8	..	..
194412	Motor piston ring (.030″ oversize)—slotted	..	..	..	..	..	8
191817	Motor piston ring (.030″ oversize)—slotted	8	..	8	..	..	..
194405	Motor piston ring (.030″ oversize)—slotted	..	..	..	..	8	..
179876	Motor piston ring (.045″ oversize)—plain	..	24	..	24	..	24

packardinfo.com

Piece No.	Name	No. Required 726 733	740 745	826 833	840 845	901 902	903 904
164634	Motor piston ring (.045" oversize) plain	24		24		24	
191825	Motor piston ring (.045" oversize) slotted		8		8		
194413	Motor piston ring (.045" oversize)—slotted						8
191818	Motor piston ring (.045" oversize)—slotted	8		8			
194406	Motor piston ring (.045" oversize)—slotted					8	

MOTOR CRANKCASE

170139	Motor crankcase and bearing caps assembly	1		1			
194245	Motor crankcase and bearing caps assembly					1	
170028	Motor crankcase and bearing caps assembly		1		1		
194246	Motor crankcase and bearing caps assembly						1
6115	Motor crankcase to oil pan stud—short ($\frac{5}{16}$")	23	27	23	27	23	27
6315	Motor crankcase to oil pan stud—long ($\frac{5}{16}$")	4	4	4	4	4	4
7005	Nut ($\frac{5}{16}$"—24 plain)	27	31	27	31	27	31
5504	Lockwasher ($\frac{5}{16}$")	27	31	27	31	27	31
3874	Washer ($\frac{5}{16}$" plain)	27	29	27	29	27	29
146303	Motor crankcase to oil pan dowel	2	2	2	2	2	2
132685	Motor crankcase to cylinder stud—large	18	18	18	18	18	18
141987	Nut—special (blind)	8	8	8	8	8	8
7007	Nut ($\frac{7}{16}$"—20 plain)	10	10	10	10	10	10
5508	Lockwasher ($\frac{7}{16}$")	18	18	18	18	18	18
177923	Motor crankcase to cylinder stud—small	8	8	8	8	8	8
7006	Nut ($\frac{3}{8}$" plain hex.)	8	8	8	8	8	8
5506	Lockwasher ($\frac{3}{8}$")	8	8	8	8	8	8
170526	Motor crankcase mudguard—left	1					
180562	Motor crankcase mudguard—left			1			
191721	Motor crankcase mudguard—left assembly					1	
158718	Motor crankcase mudguard—left (used on 740 and 745 custom)		1				
180563	Motor crankcase mudguard—left				1		
191722	Motor crankcase mudguard—left assembly						1
175301	Motor crankcase mudguard—left (used on 745)		1				
158724	Motor crankcase mudguard to crankcase liner—right	1					
183445	Motor crankcase mudguard to crankcase liner—right			1			
191719	Motor crankcase mudguard to crankcase liner—right					1	
128743	Motor crankcase mudguard to crankcase liner—right		1				
183446	Motor crankcase mudguard to crankcase liner—right				1		
191720	Motor crankcase mudguard to crankcase liner—right						1
170525	Motor crankcase mudguard—right	1					
180564	Motor crankcase mudguard—right			1			
191723	Motor crankcase mudguard—right assembly					1	
158613	Motor crankcase mudguard—right (used on 740 and 745 custom)		1				
180565	Motor crankcase mudguard—right				1		
191724	Motor crankcase mudguard—right assembly						1
175295	Motor crankcase mudguard—right (used on 745)		1				
191843	Motor crankcase mudguard to crankcase attaching spring					4	5
191845	Motor crankcase mudguard to crankcase attaching spring washer upper					4	5
62065	Motor crankcase mudguard to crankcase attaching spring washer lower					4	5
191717	Motor crankcase mudguard to crankcase liner—left—short					1	
191718	Motor crankcase mudguard to crankcase liner—left—short						1
191715	Motor crankcase mudguard to crankcase liner—left—long					1	
191716	Motor crankcase mudguard to crankcase liner—left—long						1
139803	Motor crankcase mudguard to crankcase liner	x	x	x	x		
7824	Motor crankcase mudguard to frame screw ($\frac{1}{4}$—28 x $\frac{5}{8}$" hex. hd.)	12	13	10	14	8	10
7004	Motor crankcase mudguard to frame nut ($\frac{1}{4}$"—28 plain)	12	13	10	14	8	10
5502	Lockwasher ($\frac{1}{4}$")	12	13	10	14	8	10
3868	Washer ($\frac{1}{4}$" plain)	13	13	10	14		
62065	Washer					8	10
5242	Motor crankcase mudguard to crankcase screw ($\frac{1}{4}$—20 x $\frac{5}{8}$" hex. hd.)	14	17	12	15		
191846	Motor crankcase mudguard to crankcase stud					4	5

Packardinfo.com

Printed in U. S. A.

Piece No.	Name	No. Required 726 733	740 745	826 833	840 845	901 902	903 904
5502	Lockwasher (1/4")	14	17	12	15	..	..
7004	Nut (1/4"—28)	..	..	..	..	4	5
62065	Washer (17/64 x 3/4" plain)	14	17	12	15	..	..
4690	Cotter pin (1/8 x 3/8")	..	..	..	..	4	5
170523	Motor crankcase mudguard—front assembly	1	..	1	..	..	..
191971	Motor crankcase mudguard—front assembly	..	..	..	..	1	..
148404	Motor crankcase mudguard—front assembly (used on 740 and 745 custom)	..	1	..	1	..	..
191972	Motor crankcase mudguard—front assembly	..	..	..	..	..	1
175328	Motor crankcase mudguard—front assembly (used on 745)	..	1	..	..	..	..
7827	Screw—long (1/4—28 x 3/4")	..	..	..	..	3	3
7824	Screw—short (1/4—28 x 5/8" hex. hd.)	2	7	2	5	3	3
7852	Screw (1/4—28 x 7/8" hex. hd.)	2	2	2	2	..	..
7004	Nut (1/4"—28 plain)	4	9	4	7	6	6
5502	Lockwasher (1/4")	4	9	4	7	6	6
3868	Washer (1/4")	..	..	..	..	8	8
139489	Motor crankcase mudguard—front liner rivet (9/64 x 3/16") F. H. tubular	5	5	5	5	5	5
191961	Motor crankcase mudguard left spring bracket cutout cover	..	..	..	..	1	1
7824	Screw (1/4—28 x 5/8" hex. hd.)	..	..	..	..	3	3
3868	Washer (1/4")	..	..	..	..	3	3
5502	Lockwasher (1/4")	..	..	..	..	3	3
7004	Nut (1/4"—28)	..	..	..	..	3	3
143114	Motor crankcase oil filler assembly	1	..	1	..	..	..
179982	Motor crankcase oil filler assembly	..	1	..	1	..	..
190564	Motor crankcase oil filler assembly	..	..	..	..	1	1
143105	Motor crankcase oil filler baffle assembly (use with stamped steel filler)	1	1	1	1	1	1
190566	Motor crankcase oil filler body assembly	..	..	..	..	1	1
143106	Motor crankcase oil filler body clamp plate (use with stamped steel filler)	1	1	1	1	1	1
77748	Motor crankcase oil filler core hole expansion plug (use with cast filler)	..	2	..	..	..	..
191549	Motor crankcase oil filler clamp plate (used with double horn equipment)	..	..	..	..	1	..
157724	Motor crankcase oil filler cover assembly	1	..	1	..	..	..
179979	Motor crankcase oil filler cover assembly (use with stamped steel filler)	..	1	..	1	..	..
190572	Motor crankcase oil filler cover and cap assembly	..	..	..	..	1	1
143110	Motor crankcase oil filler cover hinge pin (use with stamped steel filler)	1	1	1	1	..	..
77547	Motor crankcase oil filler cover hinge pin (use with cast filler)	..	1	..	..	..	..
4690	Motor crankcase oil filler cover hinge pin cotter pin (1/16 x 3/8")	..	..	..	..	1	1
3866	Washer (3/16")	..	..	..	..	1	1
191005	Motor crankcase oil filler cover hinge pin spring	..	..	..	..	1	1
5262	Motor crankcase oil filler cover hinge rivet (.093 x 13/32" rnd. hd.) (use with cast filler)	..	3	..	..	..	..
191656	Motor crankcase oil filler cover knob	..	..	..	..	..	1
194337	Motor crankcase oil filler cover knob	..	..	..	..	1	..
5694	Screw (No. 8—32 x 3/8" fill. hd.)	..	..	..	..	1	1
3866	Washer (3/16")	..	..	..	..	1	1
5695	Lockwasher (No. 8)	..	..	..	..	1	1
143109	Motor crankcase oil filler cover lock (use with stamped steel filler)	1	1	1	1	..	..
120997	Motor crankcase oil filler cover lock (use with cast filler)	..	1	..	..	..	..
5262	Rivet (.093 x 13/32" rnd. hd.) (use with cast filler)	..	2	..	..	..	..
8248	Motor crankcase oil filler to crankcase screw (5/16—18 x 1" hex. hd.) (use with stamped steel filler)	2	2	2	2	..	..
5945	Motor crankcase oil filler to crankcase screw (5/16—18 x 3/4" hex. hd. spl.)	..	..	..	..	2	2
5259	Motor crankcase oil filler to crankcase screw (5/16 - 18 x 3 3/4" hex. hd.) (use with cast filler)	..	2	..	..	..	..
5504	Lockwasher (5/16")	2	2	2	2	2	2
3874	Washer (5/16" plain) (use with cast filler)	..	2	..	..	..	..
143131	Motor crankcase oil filler gasket	2	2	2	2	2	1
130104	Motor crankcase oil filler strainer assembly (use with cast filler)	..	1	..	..	..	..
3755	Screw (No. 5—40 x 1/4" rnd. hd. mach.) (use with cast filler)	..	2	..	..	..	..
3516	Lockwasher No. 6 (use with cast filler)	..	2	..	..	..	..
6115	Motor crankcase to piston lubricator valve body stud (5/16")	2	2	..	..	..	..
5832	Motor crankcase to piston lubricator valve body stud (5/16")	..	..	2	2	..	..
184310	Motor crankcase timing indicator	1	1	1	1	1	1

packardmotorcar.com

Piece No.	Name	No. Required 726 733	740 745	826 833	840 845	901 902	903 904
7711	Screw (1/4—20 x 5/8" fill. hd.)	2	2	2	2	2	2
5502	Lockwasher (1/4")	2	2	2	2	2	2
158270	Motor crankcase to transmission case stud—long	6	6	6	6	..	..
190475	Motor crankcase to transmission case stud—long	..	..	..	..	6	6
5666	Motor crankcase to transmission case stud—short	2	2	2	2	2	2
3877	Washer (3/8")	..	..	..	..	6	6
5506	Lockwasher (3/8")	8	8	8	8	8	8
7006	Nut (3/8"—24 plain)	8	8	8	8	8	8
173360	Motor gear cover assembly (not used with vacuum pump)	1	1	..	..	..	..
178020	Motor gear cover assembly (used with vacuum pump)	1	1	..	..	..	..
184473	Motor gear cover assembly	..	..	1	1	1	1
6015	Stud (5/16 x 18—5/16 x 24 x 1 1/8")	10	10	9	9	9	9
5845	Stud (5/16")	..	..	1	1	1	1
7005	Nut (5/16"—24 plain)	15	15	15	15	15	15
5504	Lockwasher (5/16")	15	15	15	15	15	15
5577	Screw (5/16—24 x 7/8" hex. hd.)	5	5	5	5	5	5
158668	Motor gear cover gasket	1	1	1	1	1	1
170522	Motor gear cover oil retainer washer	1	1	1	1	1	1
170081	Motor gear cover oil retaining washer retainer	1	1	1	1	1	1
147476	Motor gear housing breather	1	1	1	1	1	1
148435	Motor gear housing breather baffle	1	1	1	1	1	1
147479	Motor gear housing breather gasket	1	1	1	1	1	1
5457	Motor gear housing breather screw (5/16—18 x 3/4" hex. hd.)	2	2	2	2	2	2
5504	Lockwasher (5/16")	2	2	2	2	2	2
3874	Washer (5/16" plain)	2	2	2	2	2	2
138910	Motor gear housing inspection hole plug assembly	1	1	1	1	1	1
20075	Gasket (1 1/4" annular)	1	1	1	1	1	1
148457	Motor horn bracket assembly	..	1	..	1	..	..
183779	Motor horn bracket assembly	..	..	1	..	1	..
120999	Motor horn bracket	1	..	..	..	..	..
170157	Motor oil pan	1	..	1	..	1	..
158630	Motor oil pan	..	1	..	1	..	1
170156	Motor oil pan gasket	1	..	1	..	1	..
169185	Motor oil pan gasket	..	1	..	1	..	1
107889	Motor oil pan drain plug (1 1/4" male)	1	1	1	1	1	1
20075	Gasket (1 1/4" annular std.)	1	1	1	1	1	1
158126	Motor oil pan oil gauge body cover—outer	1	..	1	..	1	..
158125	Motor oil pan oil gauge body cover—outer	..	1	..	1	..	1
158266	Motor oil pan oil gauge body cover outer gasket	1	1	1	1	1	1
158078	Motor oil pan oil gauge body cover—inner	1	1	1	1	1	1
158280	Motor oil pan oil gauge body cover inner gasket	1	1	1	1	1	1
5576	Motor oil pan oil gauge body cover screw (No. 10—32 x 5/8" fill. hd. mach.)	6	6	6	6	6	6
5500	Lockwasher (3/16")	6	6	6	6	6	6
158072	Motor oil pan oil gauge dial assembly	1	1	1	1	1	1
158279	Motor oil pan oil gauge glass	1	1	1	1	1	1
158267	Motor oil pan oil gauge glass gasket—upper	1	1	1	1	1	1
158277	Motor oil pan oil gauge glass gasket—lower	1	1	1	1	1	1
158230	Motor oil pan oil gauge float and arm assembly	1	1	1	1	1	1
158278	Motor oil pan oil gauge float arm pin	1	1	1	1	1	1
3868	Washer (1/4" plain)	1	1	1	1	1	1
158276	Motor oil pan oil gauge float arm pin lock	1	1	1	1	1	1
190795	Motor support front assembly	..	..	..	..	2	2
7872	Motor support front to frame screw (3/8—24 x 3/4" hex. hd.)	..	..	..	..	8	8
5506	Lockwasher (3/8")	..	..	..	..	8	8
7006	Nut (3/8")	..	..	..	..	8	8
133467	Motor support front to motor bolt	..	..	..	..	2	2
7008	Nut (1/2" x 20)	..	..	..	..	2	2
5133	Washer (1/2")	..	..	..	..	2	2
5510	Lockwasher (1/2")	..	..	..	..	2	2
194077	Motor support front bracket to frame shim—thick (901-903)	..	..	..	..	1	1
194076	Motor support front bracket to frame shim—thin (902-904)	..	..	..	..	1	1

packardinfo.com

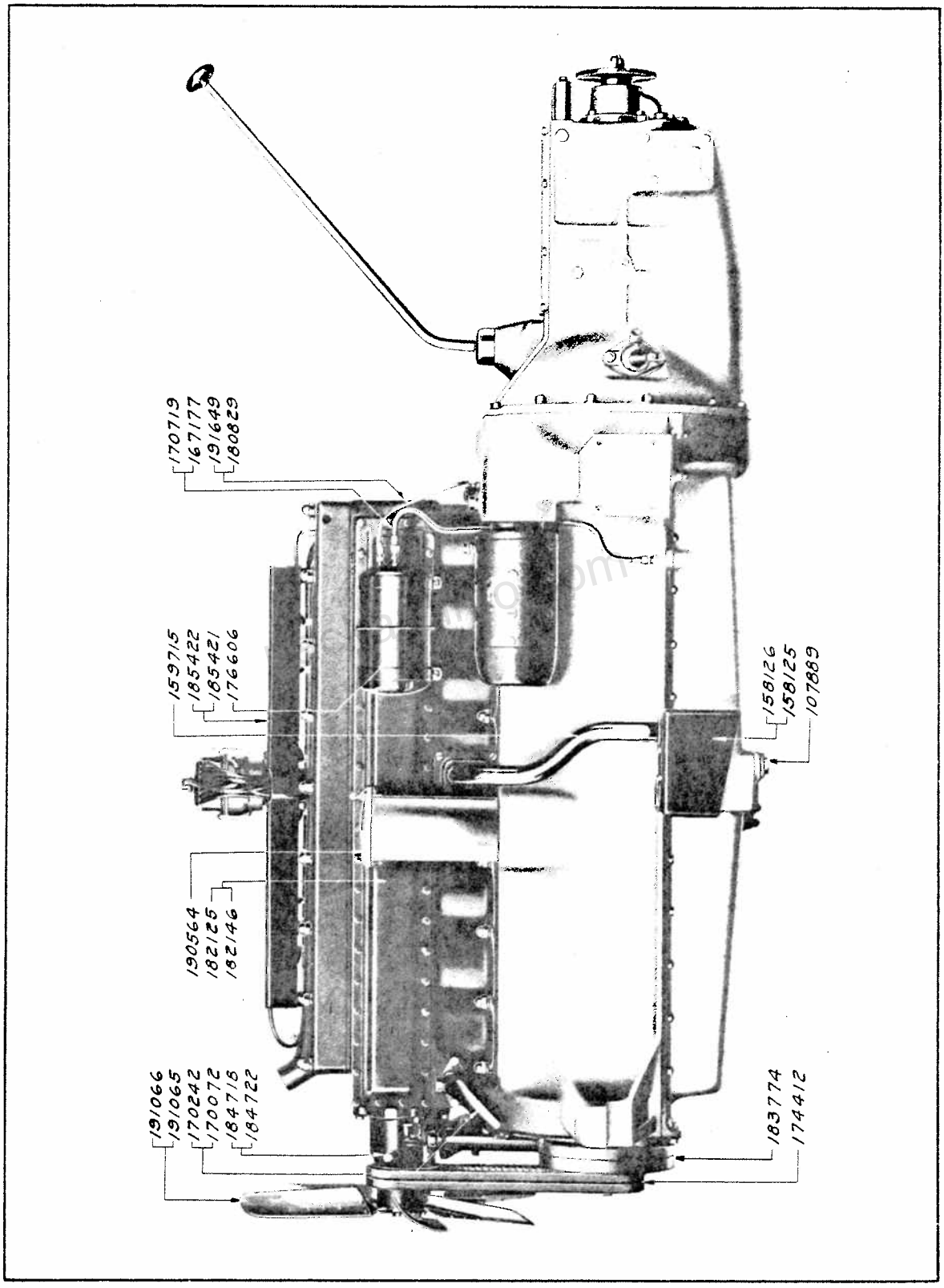

Printed in U. S. A.

packardinfo.com

Piece No.	Name	No. Required 726 733	740 745	826 833	840 845	901 902	903 904
190684	Motor support front mounting plate					2	2
194075	Motor support front and spacer assembly—right					1	1
194074	Motor support front and spacer assembly—left					1	1
190796	Motor support rear assembly					2	2
194644	Motor support rear adjusting plate left assembly (902)					1	..
190850	Motor support rear adjusting plate left assembly (901-904)					1	1
194645	Motor support rear adjusting plate left assembly (903)					..	1
190852	Motor support rear adjusting plate right assembly (901-904)					1	1
194646	Motor support rear adjusting plate right assembly (902)					1	..
194647	Motor support rear adjusting plate right assembly (903)					..	1
190886	Motor support rear adjusting plate bolt					8	8
7006	Nut (3/8"—24)					8	8
5506	Lockwasher (3/8")					8	8
126770	Washer					8	8
5908	Motor support rear to crankcase screw (3/8—24 x 1 1/4" hex. hd.)					8	8
3877	Washer (3/8")					8	8
5506	Lockwasher (3/8")					8	8
7952	Motor support rear to frame screw (7/16—20 x 7/8" hex. hd.)					8	8
5508	Lockwasher (7/16")					8	8
7007	Nut (7/16"—20)					8	8
170113	Motor support bracket front—right	1	..	..	..	..	..
180577	Motor support bracket front—right	..	..	1	..	..	..
158438	Motor support bracket front—right (used on 740 and 745 custom)	..	1	..	..	..	..
180575	Motor support bracket front—right	..	..	..	1	..	..
175286	Motor support bracket front—right (used on 745)	..	1	..	..	..	..
170112	Motor support bracket front—left	1	..	..	..	..	..
180578	Motor support bracket front—left	..	..	1	..	..	..
158439	Motor support bracket front—left (used on 740 and 745 custom)	..	1	..	..	..	..
180576	Motor support bracket front—left	..	..	..	1	..	..
175285	Motor support bracket front—left (used on 745)	..	1	..	..	..	..
158419	Motor support bracket rear right assembly (used on 740 and 745 custom)	..	1	..	..	..	..
173334	Motor support bracket rear right assembly (used on 726-826)	1	..	1	..	..	..
173336	Motor support bracket rear right assembly (used on 733-833)	1	..	1	..	..	..
158621	Motor support bracket rear right assembly (used on 740)	..	1	..	..	..	..
182456	Motor support bracket rear right assembly (used on 840)	..	..	..	1	..	..
175187	Motor support bracket rear right assembly (used on 745)	..	1	..	..	..	..
182454	Motor support bracket rear right assembly (used on 845)	..	..	..	1	..	..
158420	Motor support bracket rear left assembly (used on 745 custom)	..	1	..	..	..	..
173335	Motor support bracket rear left assembly (used on 726-826)	1	..	1	..	..	..
173337	Motor support bracket rear left assembly (used on 733-833)	1	..	1	..	..	..
158622	Motor support bracket rear left assembly (used on 740)	..	1	..	..	..	..
182457	Motor support bracket rear left assembly (used on 840)	..	..	..	1	..	..
175188	Motor support bracket rear left assembly (used on 745)	..	1	..	..	..	..
182455	Motor support bracket rear left assembly (used on 845)	..	..	..	1	..	..
133467	Motor to support bracket front bolt	2	2	2	2	..	..
7008	Nut (1/2"—20 plain)	2	2	2	2	..	..
5133	Washer (1/2" plain special)	2	2	2	2	..	..
5510	Lockwasher (1/2")	2	2	2	2	..	..
7878	Motor to support bracket rear bolt (3/8—20 x 1 3/4" hex. hd.)	8	8	8	8	..	..
7006	Nut (3/8"—24 plain)	8	8	8	8	..	..
5506	Lockwasher (3/8")	8	8	8	8	..	..
3877	Washer (3/8" plain)	8	8	8	8	..	..

MOTOR CRANKSHAFT

176263	Motor crankshaft bearing No. 1 assembly	1	..	1	..	1	..
176264	Motor crankshaft bearing No. 1 assembly	..	1	..	1	..	1
176265	Motor crankshaft bearing No. 2 assembly	1	1	1	1	1	1
176266	Motor crankshaft bearing No. 3 assembly	1	..	1	..	1	..
176267	Motor crankshaft bearing No. 3 assembly	..	1	..	1	..	1

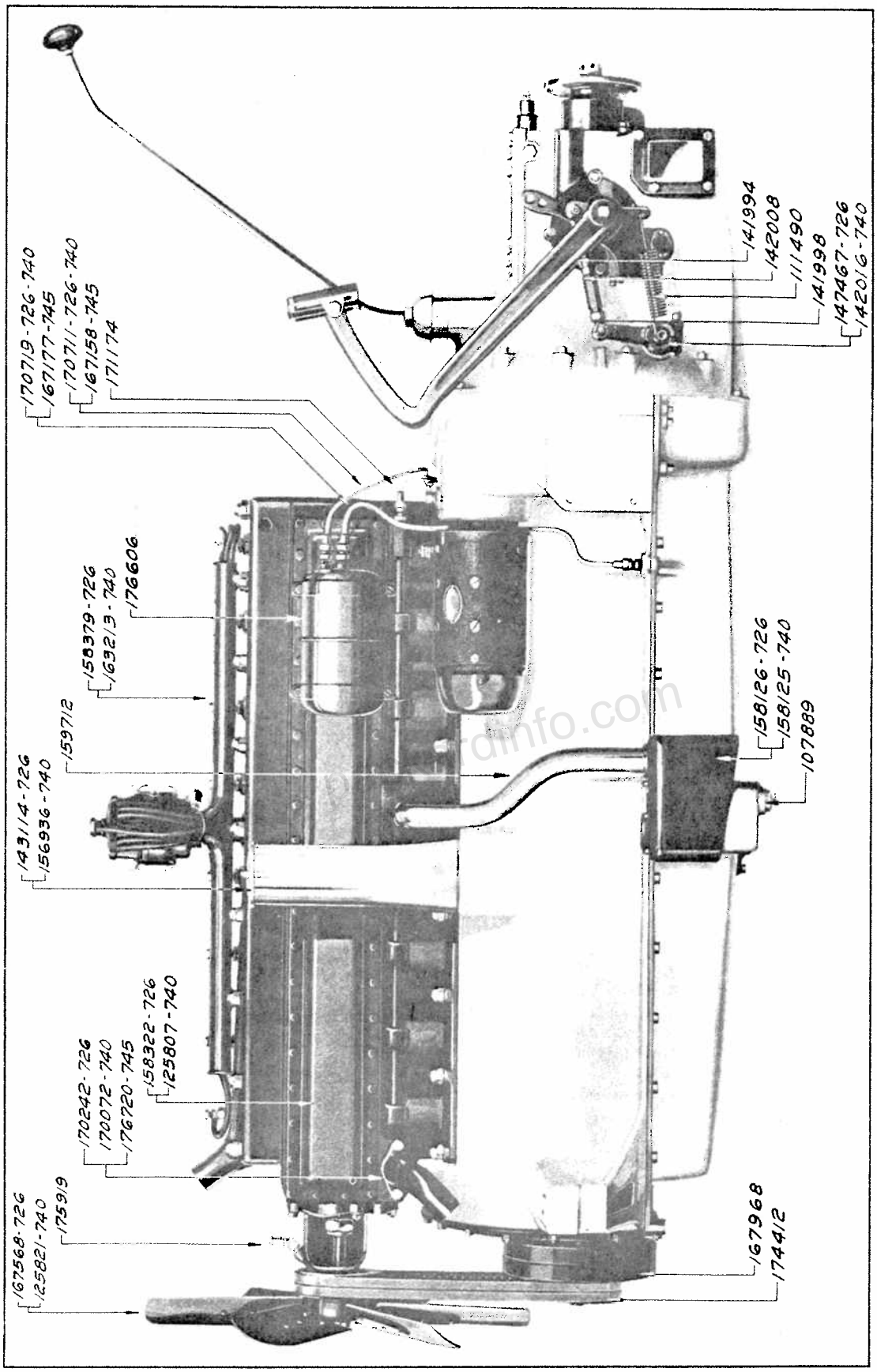

726-733-740-745

Printed in U. S. A.

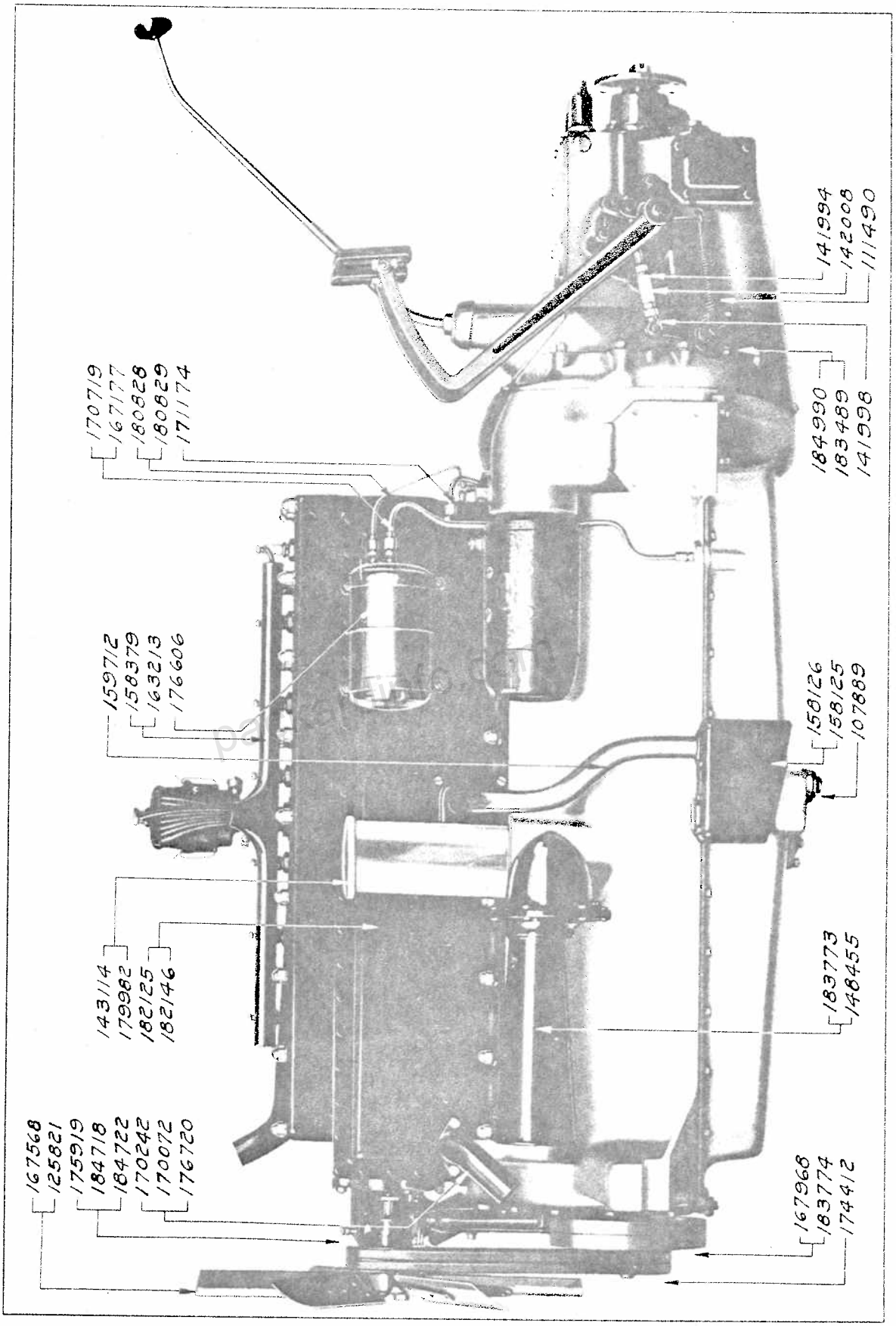
141994
142008
111490
184990
183489
141998
170719
167177
180828
180829
171174
159712
158379
163213
176606
158126
158125
107889
143114
179982
182125
182146
183773
148455
167568
125821
175919
184718
184722
170242
170072
176720
167968
183774
174412

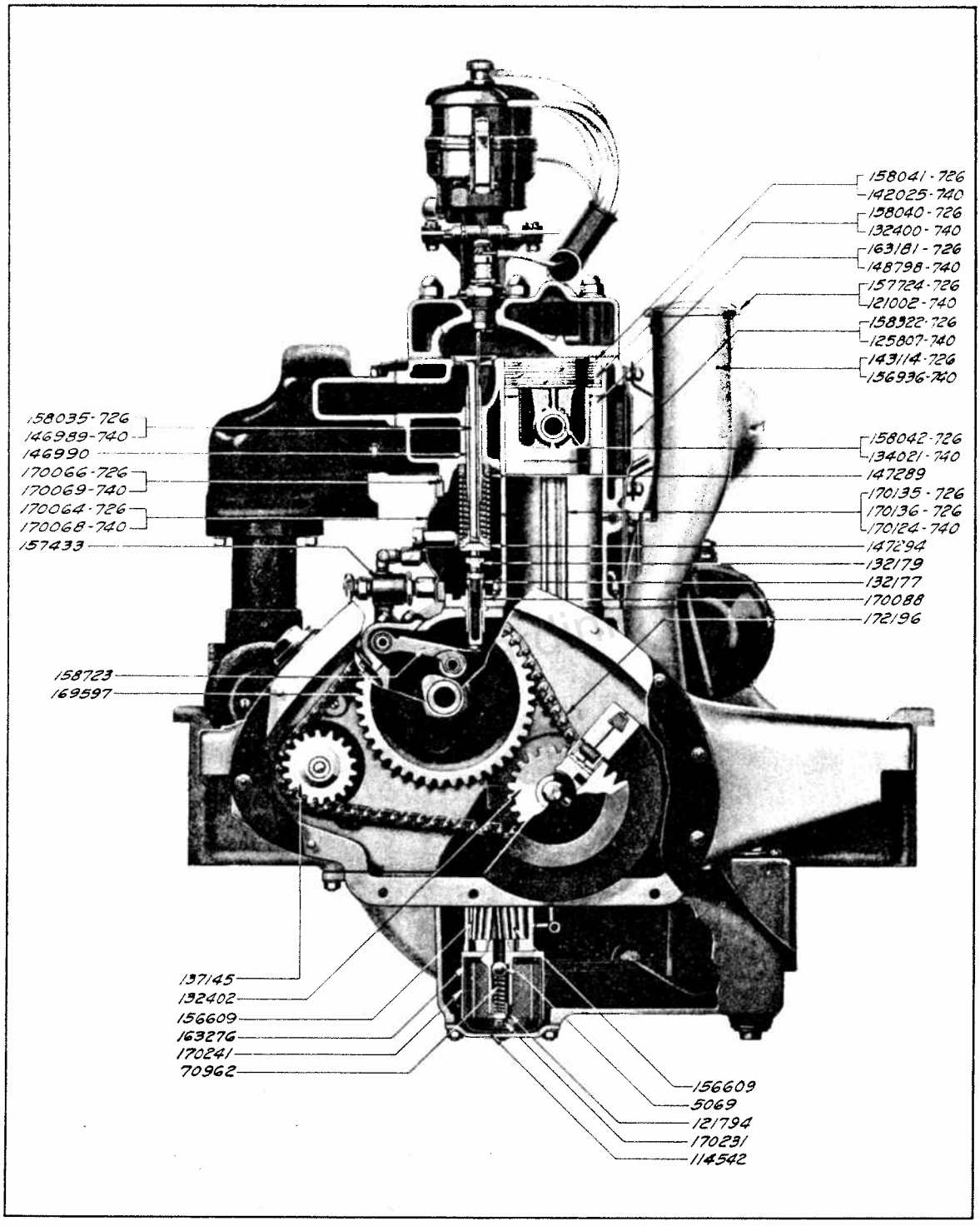

726-733-740-745

Printed in U. S. A.

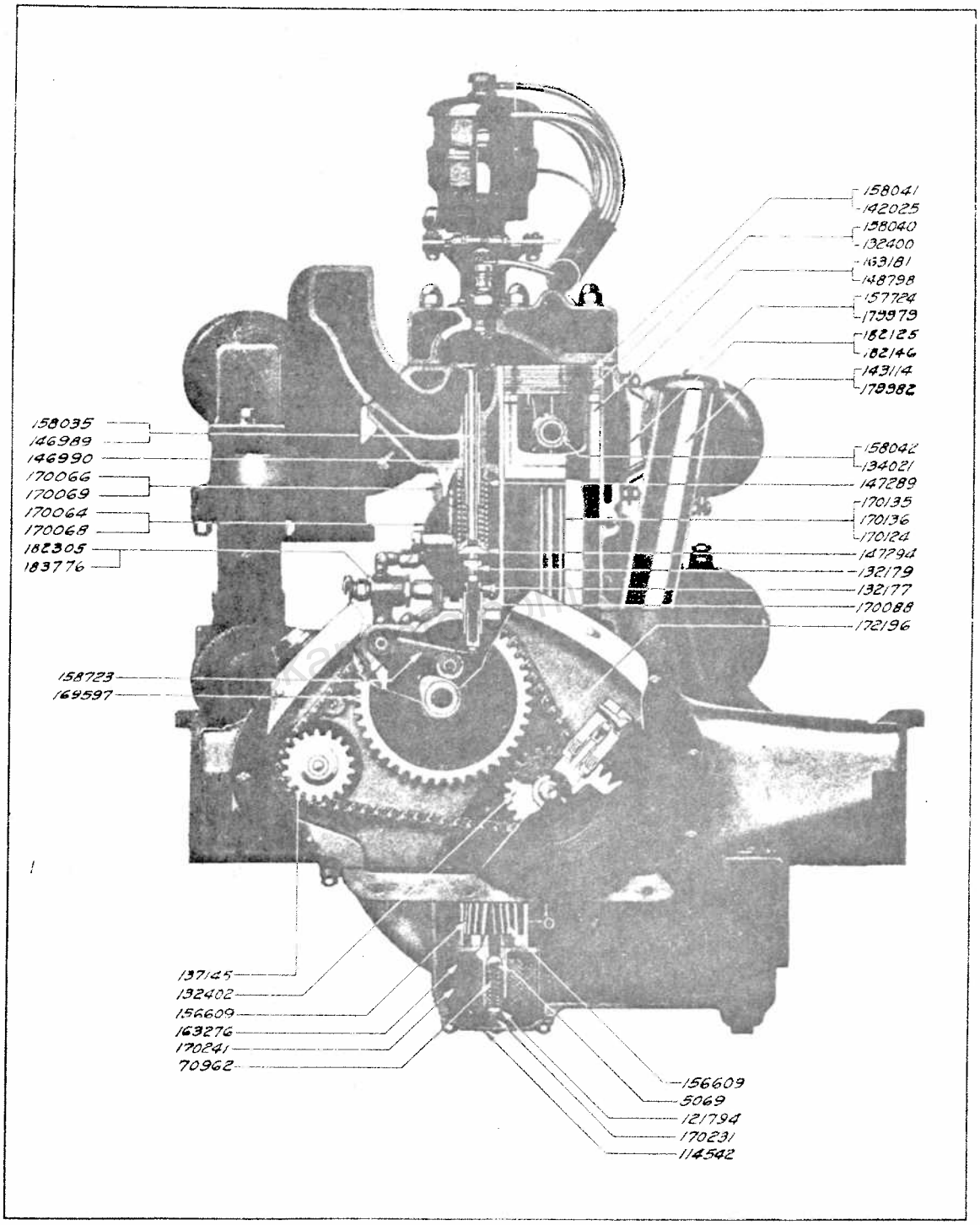

826-833-840-845

Piece No.	Name	No. Required 726 733	740 745	826 833	840 845	901 902	903 904
176268	Motor crankshaft bearing No.4 and 6 assembly	2	2	2	2	2	2
176585	Motor crankshaft bearing No.5 assembly	1	1	1	1	1	1
176586	Motor crankshaft bearing No.7 assembly	1	-	1	-	1	-
176587	Motor crankshaft bearing No.7 assembly	-	1	-	1	-	1
176588	Motor crankshaft bearing No.8 assembly	1	1	1	1	1	1
176589	Motor crankshaft bearing No.9 assembly	1	1	1	1	1	1
172180	Motor crankshaft bearing cap No.1	1	-	1	-	1	-
172181	Motor crankshaft bearing cap No.1	-	1	-	1	-	1
172184	Motor crankshaft bearing cap No.2	1	1	1	1	1	1
172185	Motor crankshaft bearing cap No.3	1	-	1	-	1	-
172186	Motor crankshaft bearing cap No.3	-	1	-	1	-	1
172187	Motor crankshaft bearing cap No.4 and 6	2	2	2	2	2	2
172182	Motor crankshaft bearing cap No.5	1	1	1	1	1	1
172188	Motor crankshaft bearing cap No.7	1	-	1	-	1	-
172189	Motor crankshaft bearing cap No.7	-	1	-	1	-	1
172190	Motor crankshaft bearing cap No.8	1	1	1	1	1	1
172183	Motor crankshaft bearing cap No.9	1	1	1	1	1	1
4754	Dowel pin 1/4 x 1-1/4"	2	2	2	2	2	2
125863	Motor crankshaft bearing-rear cap oil seal	2	2	2	2	2	2
158670	Motor crankshaft bearing cap-rear wrench hole plug	2	2	2	2	2	2
158686	Motor crankshaft bearing cap stud	14	16	14	16	12	16
158688	Motor crankshaft bearing cap stud-center and front	8	4	8	4	8	4
158687	Motor crankshaft bearing cap stud-rear	4	4	4	4	4	4
7107	Nut 7/16"-20 castle	8	4	8	4	8	4
7108	Nut 1/2"-20 castle	16	18	16	18	14	18
7008	Motor crankshaft bearing cap stud rear nut 1/2"-20 plain	2	2	2	2	2	2
4291	Cotter pin 3/32 x 3/4"	24	22	24	22	22	22
5510	Motor crankshaft bearing cap stud lockwasher 1/2" plain	2	2	2	2	2	2
141409	Washer-special	2	2	2	2	4	2
158669	Washer 1/2" plain	18	20	18	20	14	18
114673	Motor crankshaft bearing dowel-lower	9	9	9	9	9	9
111980	Motor crankshaft bearing dowel-upper	8	8	8	8	8	8
130011	Motor crankshaft bearing rear oil retainer assembly	1	1	1	1	1	1
5257	Screw No.10-32 x 29/32" fill. hd. mach.	8	8	8	8	8	8
120813	Lockwire W & M Ga. No. (.0625" x 4-1/2")-long	4	4	4	4	4	4
190503	Motor crankshaft and counterweights assembly	1	-	1	-	1	-
190504	Motor crankshaft and counterweights assembly	-	1	-	1	-	1
174207	Motor crankshaft fan pulley	1	1	-	-	-	-
210215	Motor crankshaft fan pulley	-	-	1	1	1	1
147216	Motor crankshaft fan pulley screw	1	1	1	1	1	1
147241	Motor crankshaft fan pulley screw pin	1	1	1	1	1	1
5826	Key 5/16 x 1/4 x 2"	1	1	-	-	-	-
147217	Motor crankshaft oil deflector (prior to motor No.292642 for 726-733 and 183317 for 740-745)	1	1	-	-	-	-
179169	Motor crankshaft oil deflector (after motor No.292641 for 726-733 and 183316 for 740-745)	1	1	1	1	1	1
132402	Motor crankshaft sprocket	1	1	1	1	1	1
4001	Key 5/16 x 1/4 x 1-3/8"	1	1	1	1	1	1

MOTOR CYLINDER

68601	Motor cylinder core hole plug (expansion plug 1")	6	6	6	6	6	6
170148	Motor cylinder to crankcase gasket	1	-	1	-	1	-
171952	Motor cylinder to crankcase gasket	-	1	-	1	-	1
68601	Motor cylinder head core hole plug	10	10	10	10	10	10
97975	Motor cylinder head equipment (5.03 to 1) special	1	-	1	-	-	-
97976	Motor cylinder head equipment (5.03 to 1) special	-	1	-	1	-	-
97977	Motor cylinder head equipment (6.00 to 1) special	1	-	1	-	-	-
97978	Motor cylinder head equipment (6.00 to 1) special	-	1	-	1	-	-
97986	Motor cylinder head equipment (6.52 to 1) special	1	-	1	-	-	-
97987	Motor cylinder head equipment (6.52 to 1) special	-	1	-	1	-	1
97975	Motor cylinder head and core hole plug assembly - (4.80 to 1) standard	1	-	1	-	-	-
97976	Motor cylinder head and core hole plug assembly - (4.73 to 1) standard	-	1	-	1	-	-
97977	Motor cylinder head and core hole plug assembly - (6.00 to 1) standard	1	-	1	-	-	-

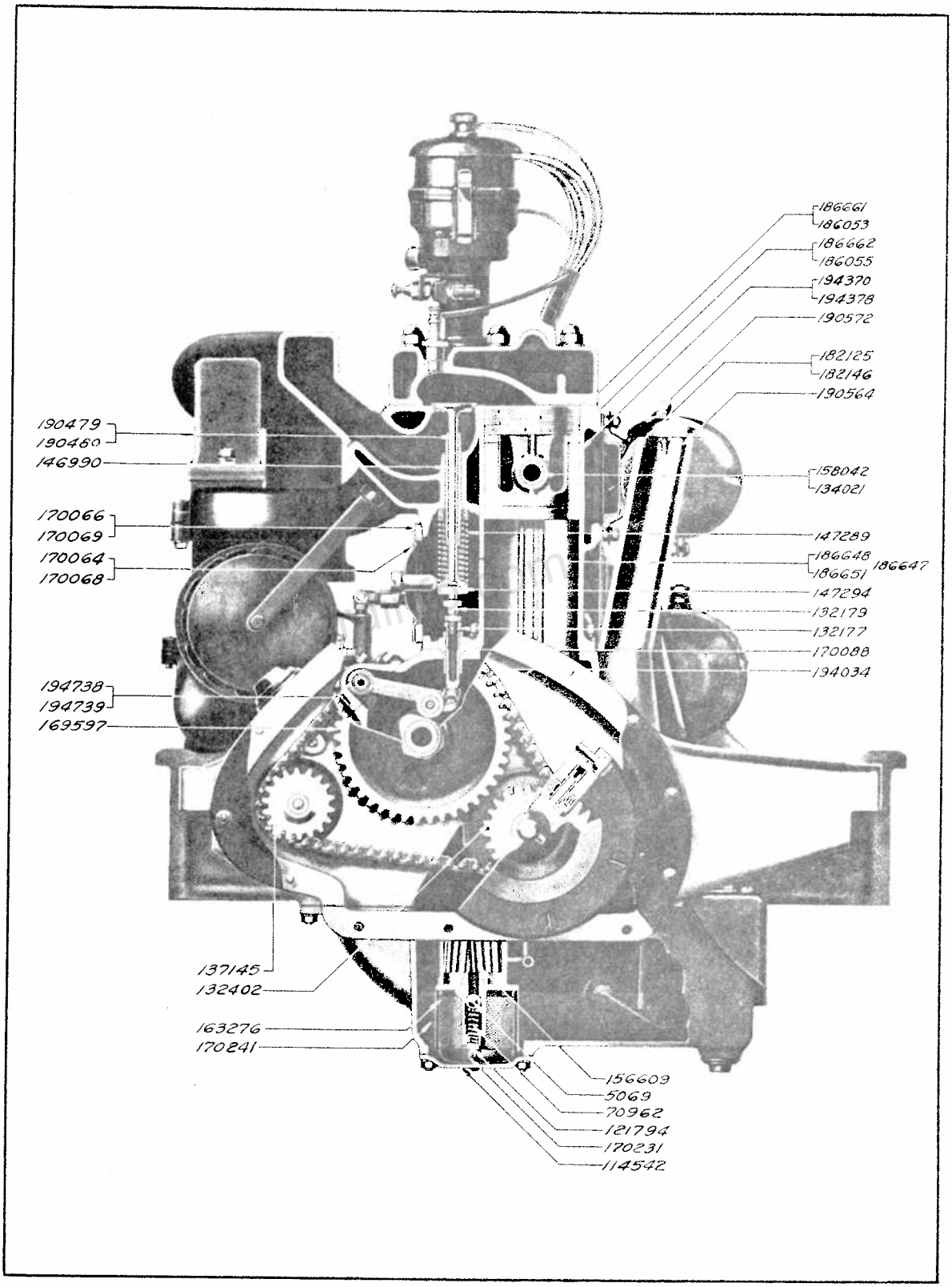
186661
186053
186662
186055
194370
194378
190572
182125
182146
190564
190479
190480
146990
158042
134021
170066
170069
147289
170064
170068
186648
186651
186647
147294
132179
132177
170088
194034
194738
194739
169597
137145
132402
163276
170241
156609
5069
70962
121794
170231
114542

packardinfo.com

Piece No.	Name	No. Required					
		726 733	740 745	826 833	840 54	904 902	904 904
97978	Motor cylinder head and core hole plug assembly - (6.00 to 1) standard	-	1	-	1	-	-
191539	Motor cylinder head and core hole plug assembly - (6.00 to 1)ratio)	-	-	-	-	1	-
191540	Motor cylinder head and core hole plug assembly - (6.00 to 1 ratio)	-	-	-	-	-	1
191543	Motor cylinder head and core hole plug assembly-low compression (5.03 to 1 ratio)	-	-	-	-	1	-
191544	Motor cylinder head and core hole plug assembly-low compression (5.03 to 1 ratio)	-	-	-	-	-	1
191541	Motor cylinder head and core hole plug assembly-high compression (6.52 to 1 ratio)	-	-	-	-	1	-
191542	Motor cylinder head and core hole plug assembly-high compression (6.52 to 1 ratio)	-	-	-	-	-	1
210440	Motor cylinder head gasket	1	-	1	-	1	-
210441	Motor cylinder head gasket (supersedes 170062 and 179567)	-	1	-	1	-	1
125485	Motor cylinder head stud	27	27	27	27	27	27
141987	Nut-blind 7/16-20	27	27	27	27	27	27
142686	Motor cylinder head stud washer	25	25	25	25	25	25
3883	Washer 7/16" plain	4	4	4	4	4	4
158313	Motor cylinder manifold equalizer tube assembly	1	-	-	-	-	-
142048	Motor cylinder manifold equalizer tube assembly	-	1	-	-	-	-
169045	Motor cylinder manifold equalizer tube elbow gasket	2	2	-	-	-	-
5502	Motor cylinder manifold equalizer tube elbow lockwasher 1/4"	4	4	-	-	-	-
7004	Nut 1/4-28	4	4	-	-	-	-
6104	Stud 1/4"	4	4	-	-	-	-
170806	Motor cylinder and piston assembly (standard)	1	-	-	-	-	-
184412	Motor cylinder and piston assembly (standard)	-	-	1	-	-	
194353	Motor cylinder and piston assembly (standard)	-	-	-	-	1	-
171900	Motor cylinder and piston assembly (standard)	-	1	-	-	-	-
184416	Motor cylinder and piston assembly (standard)	-	-	-	1	-	-
194354	Motor cylinder and piston assembly (standard)	-	-	-	-	-	1
170807	Motor cylinder and piston assembly (oversize)	1	-	-	-	-	-
184413	Motor cylinder and piston assembly (oversize)	-	-	1	-	-	-
194355	Motor cylinder and piston assembly (oversize)	-	-	-	-	1	-
171901	Motor cylinder and piston assembly (oversize)	1	1	-	-	-	-
184417	Motor cylinder and piston assembly (oversize)	-	-	-	1	-	-
194356	Motor cylinder and piston assembly (oversize)	-	-	-	-	-	1

NOTE: Reground cylinders include pistons, rings and pins fitted, new valve guides, seats narrowed and reseated, block water tested and re-enameled. See technical letters No. 1794 and No. 7194-A for credit allowance and price.

159712	Motor cylinder ventilator flange and tube assembly	1	1	1	1	1	1
5565	Screw 1/4-28 x 1/2" oval hd.	4	4	4	4	4	4
159698	Motor cylinder ventilator flange gasket	1	1	1	1	1	1
159696	Motor cylinder ventilator tube grommet	1	1	1	1	1	1
170242	Motor cylinder water inlet flange	1	-	1	-	1	-
170072	Motor cylinder water inlet flange (used on 740)	-	1	-	1	-	1
176720	Motor cylinder water inlet flange (used on 745)	-	1	-	-	-	-
5578	Motor cylinder water inlet flange screw 5/16-24 x 3/8" hex. hd.	2	2	2	2	2	2
5504	Lockwasher 5/16"	2	2	2	2	2	2
121711	Motor cylinder water inlet flange gasket	1	1	1	1	1	1
~~196983~~	Motor cylinder water jacket plate assembly (supersedes No.182125)	1	-	1	-	1	-
182146	Motor cylinder water jacket plate assembly	-	1	-	1	-	1
7801	Screw 1/4-28 x 1/2" hex. hd.	36	40	36	40	36	40
147295	Screw special	4	4	4	4	4	4
158185	Motor cylinder water jacket plate gasket	1	-	1	-	1	-
125809	Motor cylinder water jacket plate gasket	-	1	-	1	-	1
209704	Motor spark plug-K-9 (supersedes 186872,197607 and 202635)	-	-	-	-	8	8
183793	Motor spark plug No.C-4-34--5/8"-18 thd. (supersedes 185368)	8	8	8	8	-	-
143421	Motor spark plug cap	8	8	8	8	-	-
167473	Motor spark plug nut	8	8	8	8	-	-
191526	Motor spark plug nut	-	-	-	-	8	8
183476	Motor spark plug gasket	8	8	8	8	-	-
197531	Motor spark plug gasket	-	-	-	-	8	8
219286	Motor valve-exhaust	8	-	8	-	8	-
219287	Motor valve-exhaust	-	8	-	8	-	8

Piece No.	Name	No. Required					
		726 733	740 745	826 833	840 845	901 902	903 904
219284	Motor valve-inlet	8	-	8	-	8	-
219285	Motor valve-inlet	-	8	-	8	-	8
170064	Motor valve cover assembly	1	-	1	-	1	-
170068	Motor valve cover assembly	-	1	-	1	-	1
170066	Motor valve cover gasket	1	-	1	-	1	-
170069	Motor valve cover gasket	-	1	-	1	-	1
144220	Motor valve cover stud	4	4	4	4	4	4
162456	Motor valve cover stud nut	4	4	4	4	4	4
110576	Motor valve cover stud nut gasket (9/16" annular)	4	4	4	4	4	4
132177	Motor valve push rod	16	16	16	16	16	16
170088	Motor valve push rod guide	16	16	16	16	16	16
132179	Motor valve push rod screw	16	16	16	16	16	16
132178	Motor valve push rod screw nut	16	16	16	16	16	16
147289	Motor valve spring assembly	16	16	16	16	16	16
147294	Motor valve spring key special	16	16	16	16	16	16
190596	Motor valve spring washer	16	16	16	16	-	-
97960	Motor valve spring washer-thin 1/16"	16	16	16	16	-	-
215481	Motor valve stem guide	16	16	16	16	16	16

MOTOR FLYWHEEL

190676	Motor flywheel assembly	1	-	1	-	1	-
190624	Motor flywheel assembly	-	1	-	1	-	1
147869	Motor flywheel clutch driving stud	6	-	6	-	6	-
142994	Motor flywheel clutch driving stud	-	6	-	-	-	-
184300	Motor flywheel clutch driving stud	-	-	-	6	-	6
5512	Lockwasher 9/16"	-	6	-	-	-	-
7009	Nut 9/16-18	-	6	-	-	-	-
142020	Motor flywheel flange screw	6	6	6	6	6	6
4291	Cotter pin 3/32 x 3/4"	6	6	6	6	6	6
138118	Motor flywheel flange bolt nut	6	6	6	6	6	6

MOTOR FUEL PUMP

97774	Motor fuel pump changeover equipment	1	-	-	-	-	-
97799	Motor fuel pump changeover equipment	-	1	-	-	-	-
184583	Motor fuel pump	-	-	1	-	-	-
194147	Motor fuel pump	-	-	-	-	1	-
184584	Motor fuel pump	-	-	-	1	-	-
194148	Motor fuel pump	-	-	-	-	-	1
5577	Screw 5/16-24 x 7/8" hex. hd.	-	-	2	-	2	-
5578	Screw 5/16-24 x 7/8" hex. hd.	-	-	-	2	-	2
3874	Washer 5/16" plain	-	-	2	2	2	2
5504	Lockwasher 5/16" std.	-	-	2	2	2	2
184818	Motor fuel pump to carburetor tube assembly	-	-	-	1	-	-

packardinfo.com

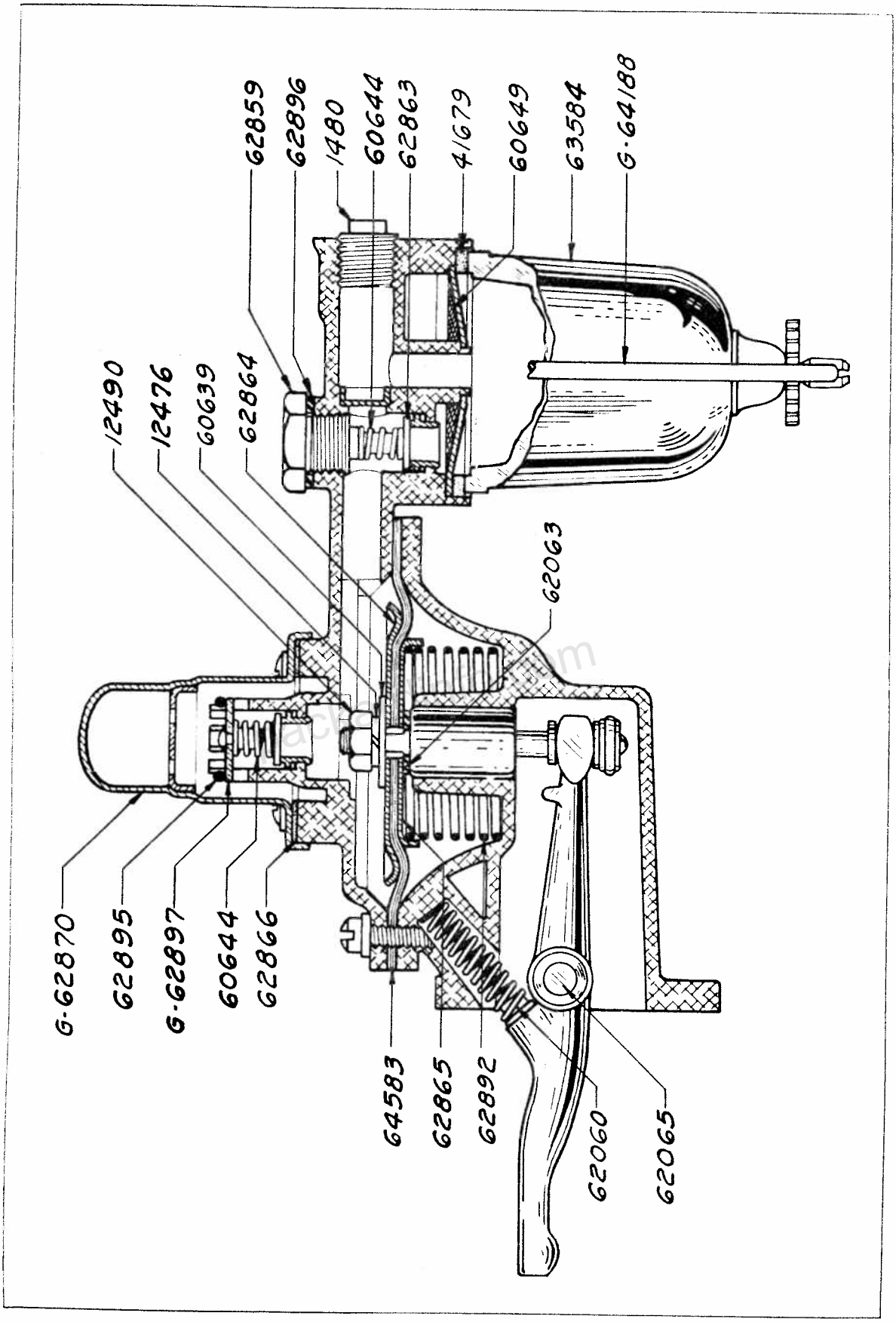

826-833-840-845

Piece No.	Name	No. Required 726 733	740 745	826 833	840 845	901 902	903 904
191962	Motor fuel pump to carburetor tube assembly						1
184819	Motor fuel pump to carburetor tube assembly			1			
194999	Motor fuel pump to carburetor tube assembly					1	
5466	Motor fuel pump to carburetor tube union nut ($\frac{5}{16}$" flared tube)			2	2	2	2
129773	Motor fuel pump to carburetor tube clip						1
5966	Motor fuel pump to carburetor tube clip screw						1
5500	Lockwasher					1	1
7003	Nut					1	1
194610	Motor fuel pump to carburetor tube clip spacer					1	1
194967	Motor fuel pump to carburetor tube grommet					2	2
184720	Motor fuel pump drip plug adapter			1		1	
184721	Motor fuel pump drip plug adapter				1		1
184726	Motor fuel pump drip plug adapter screw				1		1
184725	Motor fuel pump drip plug adapter screw			1		1	
110576	Motor fuel pump drip plug adapter screw gasket			2	2	2	2
184580	Motor fuel pump eccentric			1	1	1	1
184471	Motor fuel pump gasket			1	1	1	1
147188	Motor fuel pump inlet elbow			1		1	
167638	Motor fuel pump inlet elbow				1		1
184579	Motor fuel pump operating plunger			1	1	1	1
5426	Motor fuel pump outlet connection			1		1	
5444	Motor fuel pump outlet connection				1		1
184474	Motor fuel pump support gasket			1	1	1	1

MOTOR FUEL PUMP

The following parts are listed with Manufacturer's piece numbers, and are to be ordered direct from Stewart-Warner Corporation, Chicago, Illinois, or nearest Service Station.

packardinfo.com

SW-1480	$\frac{1}{8}$" pipe plug			x	x	x	x
SW-41679	Cork gasket			x	x	x	x
SW-60639	Hexagon washer			x	x	x	x
SW-60644	Valve spring			x	x	x	x
SW-60649	Filtering screen			x	x	x	x
SW-62060	Spring (lever)			x	x	x	x
SW-62063	Gasket			x	x	x	x
SW-62065	Lever fulcrum shaft			x	x	x	x
SW-G62098	Plunger			x	x	x	x
SW-62800	Body			x	x	x	x
SW-62859	Valve nut			x	x	x	x
SW-62863	Valve			x	x	x	x
SW-62864	Upper diaphragm plate			x	x	x	x
SW-62865	Lower diaphragm plate			x	x	x	x
SW-62866	Cork gasket (air dome)			x	x	x	x
SW-62868	Lever			x	x	x	x
SW-G62870	Air dome			x	x	x	x
SW-G62872	Cover and valve bushing assembly			x	x	x	x
SW-62892	Spring (discharge)			x	x	x	x
SW-62895	Snap ring			x	x	x	x
SW-62896	Washer (valve nut)			x	x	x	x
SW-G62897	Stop pin and bridge assembly			x	x	x	x
SW-63584	Glass bowl			x	x	x	x
SW-G64188	Chin strap assembly			x	x	x	x
SW-64583	Diaphragms			x	x	x	x

MOTOR GENERATOR ATTACHING PARTS

6316	Motor generator to crankcase stud ($\frac{3}{8}$ x 16—$\frac{3}{8}$ x 24 x 2 $\frac{5}{32}$")	3	3	3	3	3	3
7006	Nut ($\frac{3}{8}$"—24 plain)	3	3	3	3	3	3
5506	Lockwasher ($\frac{3}{8}$")	3	3	3	3	3	3

Printed in U. S. A.

Piece No.	Name	No. Required 726 733	740 745	826 833	840 845	901 902	903 904
144514	Washer ($\frac{25}{64}$ x $\frac{1}{4}$ x $\frac{1}{8}$" plain)	3	3	3	3	3	3
115274	Motor generator gasket	1	1	1	1	1	1
115288	Motor generator shaft spring plunger	1	1	1	1	1	1
147218	Motor generator shaft spring container	1	1	1	1	1	1
115291	Motor generator shaft spring plunger spring	1	1	1	1	1	1
147219	Motor generator shaft spring plunger stop plate	1	1	1	1	1	1
5705	Rivet ($\frac{1}{8}$ x $\frac{5}{16}$" R. H.)	2	2				
4212	Rivet ($\frac{1}{8}$ x $\frac{5}{16}$" R. H.)			2	2	2	2
137145	Motor generator sprocket	1	1	1	1	1	1
142694	Motor generator sprocket support	1	1	1	1	1	1
114883	Motor generator sprocket support to crankcase gasket	1	1	1	1	1	1
115276	Motor generator sprocket thrust button	1	1	1	1	1	1

MOTOR GENERATOR

(Owen-Dyneto CD-840)

The following parts are listed with Manufacturer's piece numbers, and are to be ordered direct from Owen-Dyneto Corporation, Syracuse, New York, or nearest Service Station.

OD10L56	Lockwasher No. 6	X	X
OD10L58	Lockwasher No. 8	X	X
OD14L56	Lockwasher No. 10	X	X
OD14L60	Lockwasher No. 10	X	X
OD14N2600	Through bolt nut	X	X
OD20N1580	Brush ring nut	X	X
OD24N7600	Cutout terminal nut	X	X
OD20W562	Plain washer	X	X
OD14156004	Battery charge regulator lead screw	X	X
OD14156006	Commutator end bearing cap screw	X	X
OD14305410	Pole piece screw	X	X
OD16158012	Brush ring screw	X	X
OD20156004	Fuse holder terminal screw	X	X
OD20160004	Brush lead screw	X	X
OD24158005	Commutator end cover screw	X	X
OD24160004	Battery charge regulator attaching screw	X	X
OD24160006	Battery charge regulator terminal screw	X	X
OD22116	Commutator end bearing cap gasket	X	X
OD22157	Commutator end felt washer	X	X
OD22158	Commutator end felt washer retainer	X	X
OD22164	Armature shaft nut	X	X
OD22169	Lockwasher No. 10 (special)	X	X
OD22376	Commutator end bearing retainer	X	X
OD22412	Through bolt	X	X
OD22478	Name plate drive screw	X	X
OD22590	Shake proof washer	X	X
OD22594	Commutator end bearing cap assembly	X	X
OD22596	Commutator end cover	X	X
OD22599	Commutator end bearing retainer ring	X	X
OD22600	Commutator end bearing	X	X
OD22605	Commutator end felt washer cup	X	X
OD22676	Fuse spring	X	X
OD22677	Fuse holder	X	X
OD22678	Fuse	X	X
OD22679	Fuse insulation	X	X
OD22739	Drive end housing	X	X
OD22740	Commutator end housing	X	X
OD22747	Adjusting pinion	X	X
OD22748	Adjusting pinion spring washer	X	X
OD22750	Adjusting pinion washer	X	X

packardinfo.com

Owen-Dyneto CD-840

Printed in U. S. A.

Piece No.	Name	No. Required 726 733	740 745	826 833	840 845	901 902	903 904
OD22754	Commutator end housing and brush ring and fuse	x	x				
OD22755	Brush ring assembly	x	x				
OD22756	Armature	x	x				
OD22761	Main brush	x	x				
OD22762	Control brush	x	x				
OD22791	Through bolt insulator	x	x				
OD22812	Fuse holder assembly	x	x				
OD22813	Control brush advance stop fiber	x	x				
OD22888	Field frame	x	x				
OD23014	Pole piece	x	x				
OD23111	Field coil	x	x				
OD23150	Battery charge regulator insulator	x	x				
OD20100	Battery charge regulator	x	x				
OD26125	Dowel pin	x	x				

MOTOR GENERATOR

(Owen-Dyneto CL-896)

The following parts are listed with Manufacturer's piece numbers, and are to be ordered direct from Owen-Dyneto Corporation, Syracuse, New York, or nearest Service Station.

OD10L58	Lockwasher No. 8	x	x	x	x
OD14L04	Lockwasher ($\frac{1}{4}$")	x	x	x	x
OD14L56	Lockwasher No. 6	x	x	x	x
OD14L60	Lockwasher No. 10	x	x	x	x
OD14N2041	Through bolt nut	x	x	x	x
OD20N1580	Brush ring nut	x	x	x	x
OD24N7600	Cutout terminal nut	x	x	x	x
OD14156004	Battery charge regulator lead screw	x	x	x	x
OD14156006	Commutator end bearing cap screw	x	x	x	x
OD14305410	Pole piece screw	x	x	x	x
OD16158012	Brush ring screw	x	x	x	x
OD20160004	Brush lead screw	x	x	x	x
OD24158005	Commutator end cover screw	x	x	x	x
OD24160004	Battery charge regulator attaching screw	x	x	x	x
OD24160006	Battery charge regulator terminal screw	x	x	x	x
OD20117	Lockwasher No. 6 (special)	x	x	x	x
OD20134	Fuse holder	x	x	x	x
OD20220	Battery charge regulator	x	x	x	x
OD20238	Fuse holder assembly	x	x	x	x
OD22116	Commutator end bearing cap gasket	x	x	x	x
OD22157	Commutator end felt washer	x	x	x	x
OD22158	Commutator end felt washer retainer	x	x	x	x
OD22164	Armature shaft nut	x	x	x	x
OD22169	Lockwasher No. 10 (special)	x	x	x	x
OD22376	Commutator end bearing retainer	x	x	x	x
OD22478	Name plate drive screw	x	x	x	x
OD22590	Shakeproof washer	x	x	x	x
OD22594	Commutator end bearing cap assembly	x	x	x	x
OD22596	Commutator end cover	x	x	x	x
OD22599	Commutator end bearing retainer ring	x	x	x	x
OD22600	Commutator end bearing	x	x	x	x
OD22605	Commutator end felt washer cup	x	x	x	x
OD22676	Fuse spring	x	x	x	x
OD22678	Fuse	x	x	x	x
OD22679	Fuse insulation	x	x	x	x
OD22739	Drive end housing	x	x	x	x
OD22747	Adjusting pinion	x	x	x	x
OD22748	Adjusting pinion spring washer	x	x	x	x

packardinfo.com

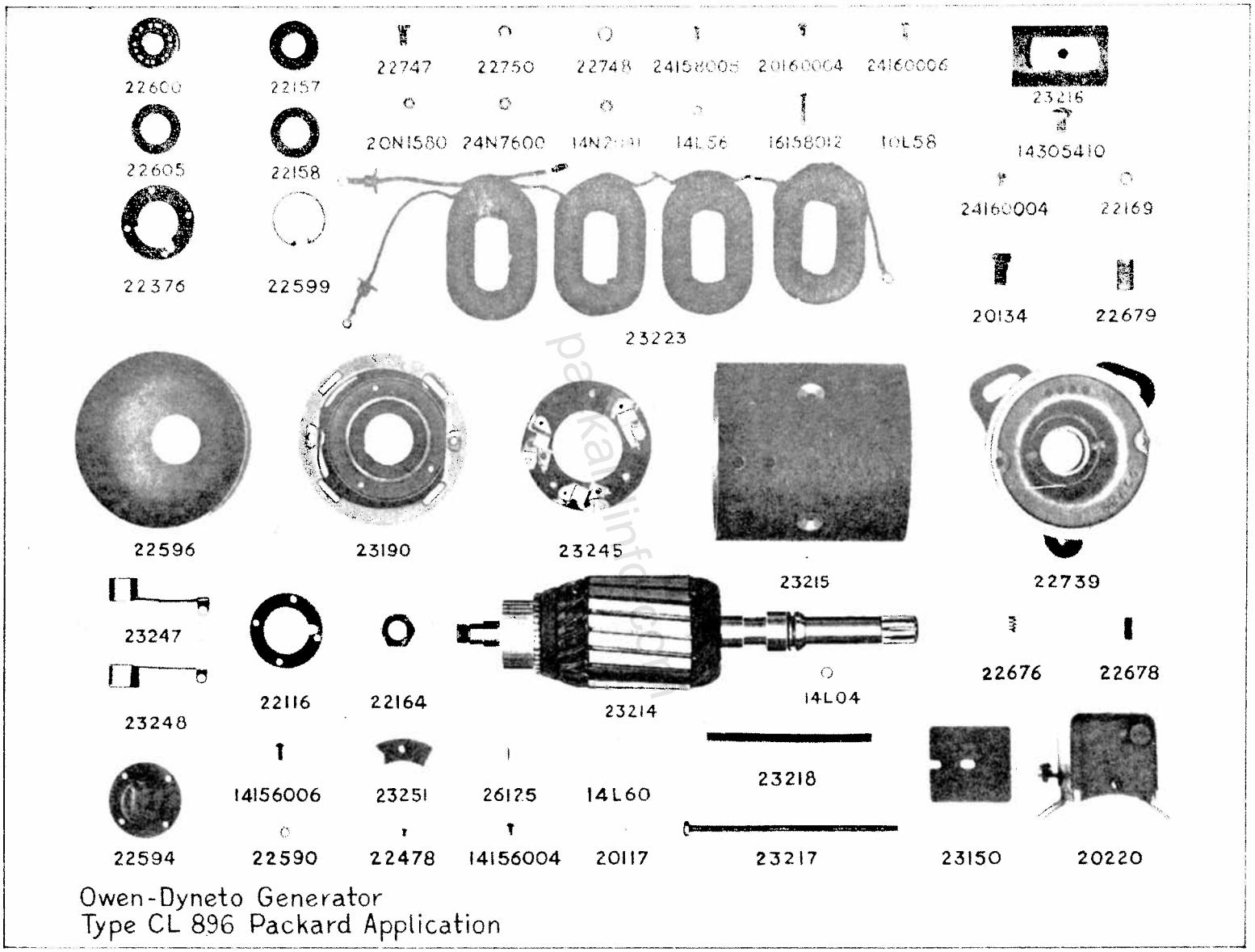

Owen-Dyneto Generator
Type CL 896 Packard Application

Printed in U.S.A.

Piece No.	Name	No. Required 726 733	740 745	826 833	840 845	901 902	904
OD22750	Adjusting pinion washer			x	x	x	x
OD23150	Battery charge regulator insulator			x	x	x	x
OD23190	Commutator end housing			x	x	x	x
OD23214	Armature			x	x	x	x
OD23215	Field frame			x	x	x	x
OD23216	Pole piece			x	x	x	x
OD23217	Through bolt			x	x	x	x
OD23218	Through bolt insulating tube			x	x	x	x
OD23223	Field coil			x	x	x	x
OD23245	Brush ring			x	x	x	x
OD23246	Commutator end housing and bearing assembly			x	x	x	x
OD23247	Brush (main)			x	x	x	x
OD23248	Brush (control)			x	x	x	x
OD23251	Third brush advance stop			x	x	x	x
OD26125	Dowel pin			x	x	x	x

MOTOR OIL FILTER

176606	Motor oil filter replacement unit	1	1	1	1	1	1
7004	Nut (1/4"—28 plain)	4	4	4	4	4	4
5502	Lockwasher (1/4")	4	4	4	4	4	4
148856	Motor oil filter inlet connection (use with 1/4" tube)	1	1				
180909	Motor oil filter inlet connection (use with 3/16" tube)	1	1	1	1	1	1
194782	Motor oil filter inlet connection restriction					1	1
194783	Motor oil filter inlet connection restriction					1	1
180828	Motor oil filter inlet tube assembly (used on 726-733-740)	1	1	1			
191649	Motor oil filter inlet tube assembly					1	
180829	Motor oil filter inlet tube assembly (used on 745)		1		1		1
157477	Union nut (used on 740)	2	2	2	2	2	2
5467	Union nut (1/4") (used on 745)		2				
180938	Motor oil filter inlet tube connection adapter (used on 745) (with 3/16" tube)		2		2		2
170719	Motor oil filter outlet tube assembly (used on 740)	1	1	1		1	
167177	Motor oil filter outlet tube assembly (used on 745)		1		1		1
5426	5/16" flared tube union connecting (used on 740)	2	2	2		2	
5444	5/16" flared tube union connecting (used on 745)		2		2		2
157466	Union nut 5/16" flared tube (used on 740)	2	2	2		2	
5466	Union nut 5/16" flared tube (used on 745)		2		2		2

MOTOR OIL PUMP

170211	Motor oil manifold assembly	1		1		1	
172197	Motor oil manifold assembly		1		1		1
7827	Screw (1/4"—28 x 3/4" hex. hd.)	18	18	18	18	18	18
5502	Lockwasher (1/4")	18	18	18	18	18	18
114684	Gasket (2 bolt special)	9	9	9	9	9	9
179951	Motor oil pump air inlet assembly	1	1	1	1	1	1
170271	Motor oil pump assembly	1	1	1	1	1	1
148443	Motor oil pump body	1	1	1	1	1	1
6015	Motor oil pump body stud	2	2	2	2	2	2
5504	Lockwasher (5/16")	2	2	2	2	2	2
7005	Nut (5/16"—24 plain)	2	2	2	2	2	2
170241	Motor oil pump body cover assembly	1	1	1	1	1	1
7704	Screw (1/4"—28 x 3/4" fill. hd.)	4	4	4	4	4	4
5502	Washer (1/4")	4	4	4	4	4	4
162623	Motor oil pump drive shaft	1	1	1	1	1	1
132173	Motor oil pump drive shaft bushing	1	1	1	1	1	1
148406	Motor oil pump driven impeller shaft	1	1	1	1	1	1
5504	Lockwasher (5/16")	1	1	1	1	1	1
7005	Nut (5/16"—24 plain)	1	1	1	1	1	1
162625	Motor oil pump driving gear	1	1	1	1	1	1
170231	Motor oil pump relief valve adj. screw	1	1	1	1	1	1
121794	Check nut	1	1	1	1	1	1

packardinfo.com

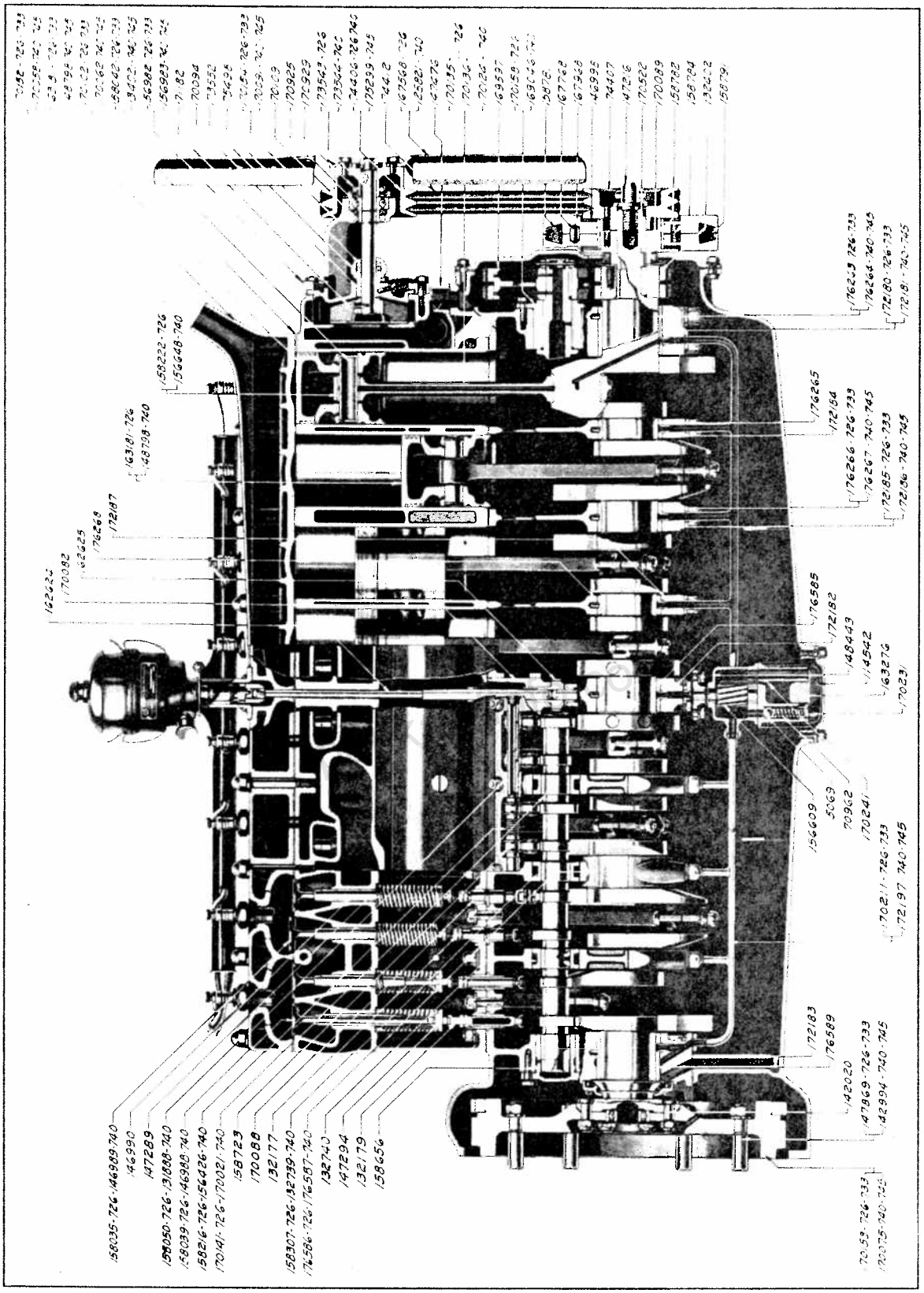

726-733-740-745

Printed in U. S. A.

Piece No.	Name	No. Required 726 733	740 745	826 833	840 845	901 902	903 904
5069	Motor oil pump relief valve ball	1	1	1	1	1	1
70962	Motor oil pump relief valve spring	1	1	1	1	1	1
136788	Motor oil pump shaft bearing	1	1	1	1	1	1
121084	Motor oil pump shaft collar	1	1	1	1	1	1
4705	Pin ($\frac{3}{32}$ x $\frac{5}{8}$")	1	1	1	1	1	1
156609	Motor oil pump shaft and driven impeller assembly	1	1	1	1	1	1
170082	Motor oil pump shaft driving gear bearing	1	1	1	1	1	1
158175	Motor oil pressure gauge tube lower assembly	1	1	1	1	. .	. .
194600	Motor oil pressure gauge tube lower assembly	. .	. .	. .	. .	1	1
169047	Motor oil pressure gauge tube upper assembly	1	1	1	1	. .	. .
191663	Motor oil pressure gauge tube upper assembly	. .	. .	. .	. .	1	1
157477	Union nut	4	4	4	4	4	4
173178	Elbow (used on 740)	1	1	1	. .	. .	. .
190922	Elbow	. .	. .	. .	. .	1	. .
173179	Elbow (used on 745)	. .	1	. .	1	. .	. .
190923	Elbow	. .	. .	. .	. .	. .	1
7007	Nut ($\frac{7}{16}$" x 20 plain)	1	1	1	1	1	1
3883	Washer ($\frac{7}{16}$" plain)	1	1	1	1	1	1
5163	Washer ($\frac{29}{64}$ x $\frac{7}{8}$ x $\frac{5}{32}$" plain)	1	1	. .	. .	. .	. .
5806	Lockwasher ($\frac{7}{16}$")	1	1	1	1	1	1
114542	Motor oil strainer cover plate	1	1	1	1	1	1
6015	Stud ($\frac{5}{16}$ x 18—$\frac{5}{16}$ x 24 x 1$\frac{1}{8}$")	6	6	6	6	6	6
5504	Lockwasher ($\frac{5}{16}$")	6	6	6	6	6	6
7005	Nut ($\frac{5}{16}$" —24 plain)	6	6	6	6	6	6
114886	Motor oil strainer cover plate gasket	1	1	1	1	1	1
163276	Motor oil strainer screen assembly	1	1	1	1	1	1

MOTOR PISTON LUBRICATOR

183778	Motor piston lubricator control valve assembly	1	1	1	1	. .	. .
147392	Motor piston lubricator control valve	1	1	. .	. .	. .	. .
183776	Motor piston lubricator control valve body	1	1	1	1	. .	. .
7005	Nut ($\frac{5}{16}$"—24 plain)	2	2	2	2	. .	. .
5504	Lockwasher ($\frac{5}{16}$")	2	2	2	2	. .	. .
157438	Motor piston lubricator control valve to crankcase gasket	1	1	1	1	. .	. .
157691	Motor piston lubricator control valve body tee	1	1	1	1	. .	. .
157434	Motor piston lubricator control valve cam	1	1	1	1	. .	. .
147393	Motor piston lubricator control valve cam spring	1	1	1	1	. .	. .
157435	Motor piston lubricator control valve cam washer	1	1	1	1	. .	. .
147397	Motor piston lubricator control valve flared tube connection	1	1	1	1	. .	. .
21662	Gasket ($\frac{3}{4}$" annular)	1	1	1	1	. .	. .
145305	Motor piston lubricator control valve cam lever	1	1	1	1	. .	. .
5198	Screw (No. 10—32 x $\frac{5}{8}$" hex. hd.)	1	1	1	1	. .	. .
5500	Lockwasher ($\frac{3}{16}$")	1	1	1	1	. .	. .
171174	Motor piston lubricator control valve to motor cylinder manifold tube assembly	1	1	1	1	. .	. .
157466	Union nut ($\frac{5}{16}$")	2	2	2	2	. .	. .
169026	Motor piston lubricator control valve to motor cylinder manifold tube union connection	1	1	1	1	. .	. .
157436	Motor piston lubricator control valve packing	1	1	1	1	. .	. .
157437	Motor piston lubricator control valve packing nut	1	1	1	1	. .	. .
182311	Motor piston lubricator control valve plunger	. .	. .	1	1	. .	. .
148004	Motor piston lubricator control valve spring	1	1	. .	. .	. .	. .
182333	Motor piston lubricator control valve spring	. .	. .	1	1	. .	. .
182310	Motor piston lubricator control valve spring cap	. .	. .	1	1	. .	. .
183757	Motor piston lubricator control valve spring retainer	. .	. .	1	1	. .	. .
21662	Motor piston lubricator control valve spring retainer gasket	. .	. .	1	1	. .	. .
110576	Motor piston lubricator control valve spring seat washer	1	1	. .	. .	. .	. .
157439	Motor piston lubricator control valve spring seat	1	1	. .	. .	. .	. .

packardinfo.com

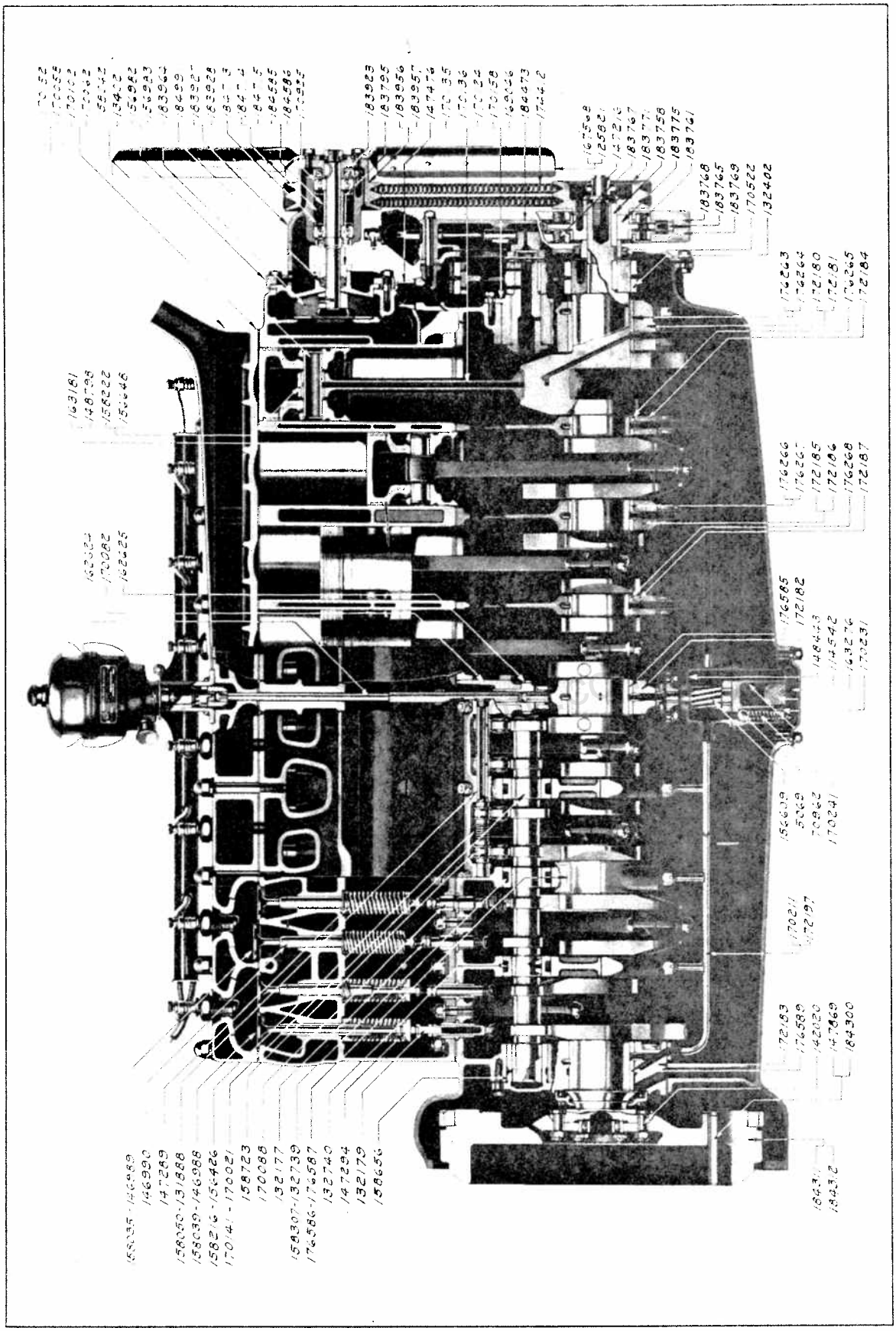

826-833-840-845

Printed in U. S. A.

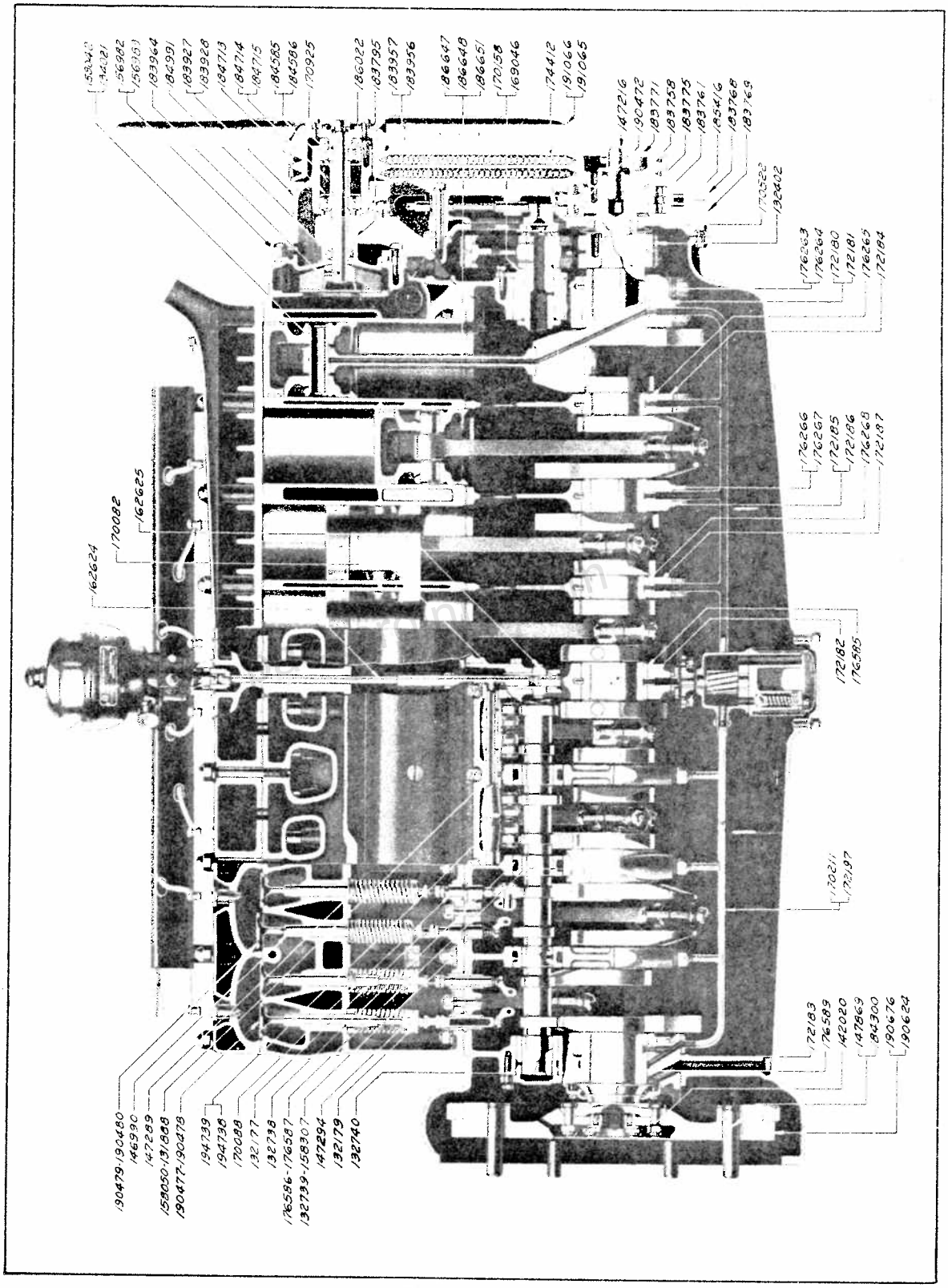
58340
84121
56982
56983
183964
84991
183927
183928
184713
184714
84775
84585
84586
170925
186022
183795
183957
183956
186647
186648
186651
170158
169046
174412
181066
181065
147216
190472
183771
183758
183775
183761
195416
183768
183769
170523
182402
176263
176264
172180
172181
176265
172184
176266
176267
172185
172186
176268
172187
172182
176585
170211
172197
172183
176589
142020
147869
184300
190676
190624
162624
170082
162625
190479-190480
146990
147289
158050-131888
190477-190478
194739
194738
170188
132177
132138
176586-176587
132739-158307
147294
132179
132740

packardinfo.com

MOTOR STARTING CRANK

Piece No.	Name	No. Required 726 733	740 745	826 833	840 845	901 902	903 904
186164	Motor starting crank assembly (used on 740-745 custom and 840)	1	1	1	1	..	..
175183	Motor starting crank assembly (used on 745 and 845)	..	1	..	1	..	..
194887	Motor starting crank assembly	..	..	..	..	1	1
158844	Motor starting crank support	1	..	1	..	..	..
170398	Motor starting crank support	..	1	..	1	..	..
5487	Bolt ($\frac{5}{16}$—24 x $\frac{7}{8}$" flat hd.)	2	2	2	2	..	..
7005	Nut ($\frac{5}{16}$"—24 plain)	2	2	2	2	..	..
5504	Lockwasher ($\frac{5}{16}$")	2	2	2	2	..	..
3874	Washer ($\frac{5}{16}$" plain)	2	2	2	2	..	..

MOTOR STARTER MOTOR

(Owen-Dyneto Type DM-693 Starting Motor for 740-745-840-845)
(Owen-Dyneto Type DI-850 Starting Motor for 726-733-826-833)

The following parts are listed with the Manufacturer's piece numbers and are to be ordered direct from Owen-Dyneto Corporation, Syracuse, N. Y., or nearest Service Station.

OD13078	Commutator end thrust washer	..	x	..	x	..	..
OD13093	Bendix drive complete (not illustrated)	x	x	x	x	..	..
OD13093-1	Bendix gear and shaft assembly	x	x	x	x	..	..
OD13093-2	Bendix drive spring	x	x	x	x	..	..
OD13093-3	Bendix driving head	x	x	x	x	..	..
OD13093-4	Bendix drive clip	x	x	x	x	..	..
OD13093-5	Bendix lock screw	x	x	x	x	..	..
OD13093-6	Bendix driving screw	x	x	x	x	..	..
OD13119	Name plate	x	x	x	x	..	..
OD13155	Armature shaft commutator end shim washer	..	x	..	x	..	..
OD13170	Armature shaft drive end shim washer—thin	x	x	x	x	..	..
OD13207	Bendix support bushing—small	..	x	..	x	..	..
OD13212	Commutator end housing bushing	..	x	..	x	..	..
OD13304	Bendix support bushing—large	..	x	..	x	..	..
OD13306	Brush spring	x	x	x	x	..	..
OD13348	Bendix drive key	x	x	x	x	..	..
OD13352	Armature shaft shim washer—thick	..	x	..	x	..	..
OD13375	Pole piece	..	x	..	x	..	..
OD13384	Pole piece	x	..	x	..	..	..
OD13383	Brush	..	x	..	x	..	..
OD13389	Terminal post brass washer—thin	x	x	x	x	..	..
OD13390	Terminal post insulating bushing	x	x	x	x	..	..
OD13391	Terminal post nut	x	x	x	x	..	..
OD13393	Brush ring with springs	..	x	..	x	..	..
OD13409	Armature	..	x	..	x	..	..
OD13292	Armature	x	..	x	..	..	..
OD13413	Bendix housing	..	x	..	x	..	..
OD13387	Bendix housing	x	..	x	..	..	..
OD13414	Commutator end housing with bushing	..	x	..	x	..	..
OD13429	Field coil	..	x	..	x	..	..
OD13430	Commutator end housing assembly with brush ring (not illustrated) (see parts 13414 and 13383)	..	x	..	x	..	..
OD13431	Commutator end cover	..	x	..	x	..	..
OD13438	Terminal post brass washer—thick	x	x	x	x	..	..
OD13439	Terminal post insulating washer	..	x	..	x	..	..
OD14L60	Brush lead screw lockwasher	..	x	..	x	..	..
OD14483	Bendix drive lockwasher	x	x	x	x	..	..
OD19L05	Terminal post nut lockwasher	..	x	..	x	..	..
OD22169	Brush ring screw lockwasher	x	x	x	x	..	..
OD22478	Name plate driving screw	x	x	x	x	..	..
OD22549	Commutator end cover pin	..	x	..	x	..	..

packardinfo.com

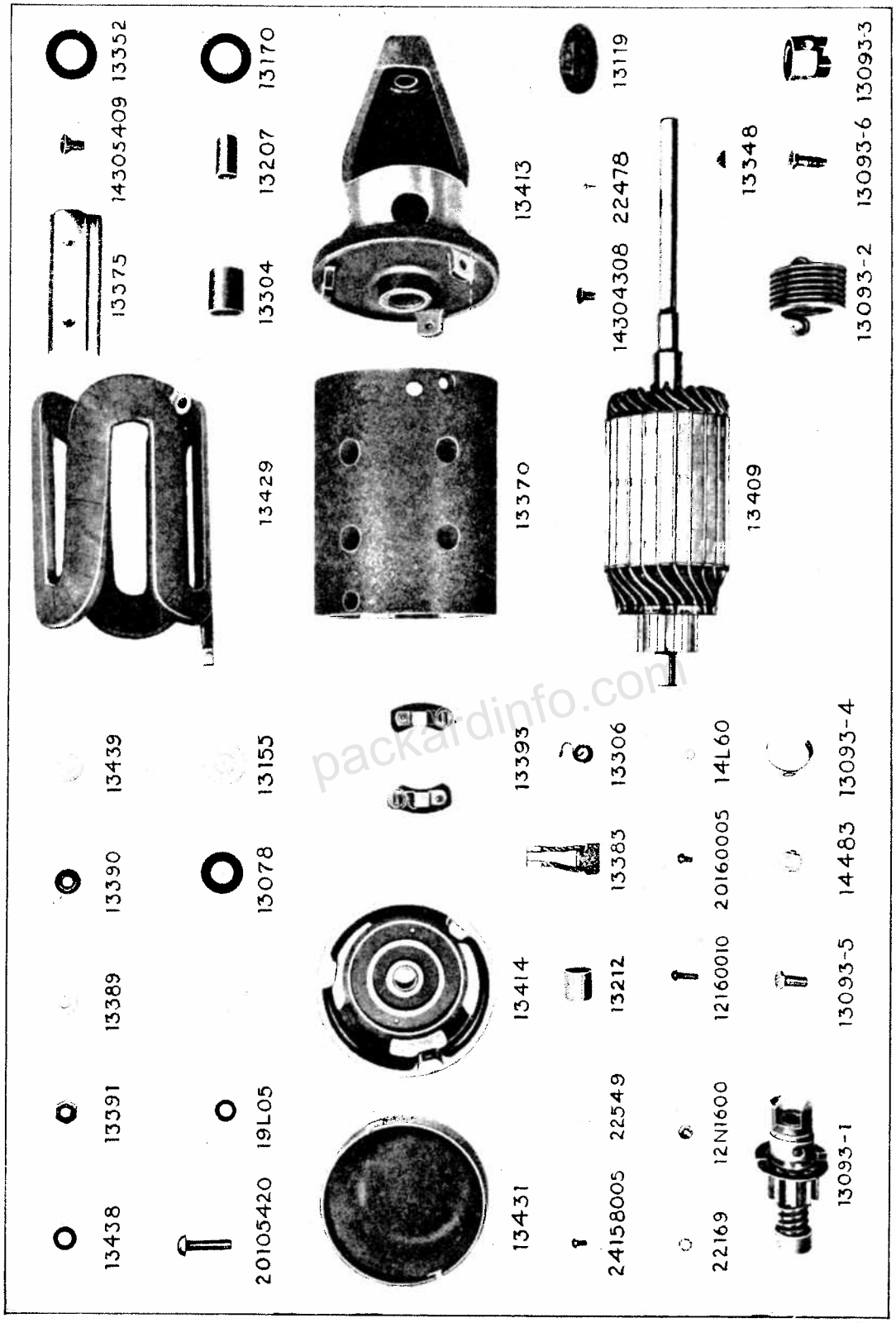

Owen-Dyneto Type DM-693 and DH-695

packardinfo.com

Printed in U. S. A.

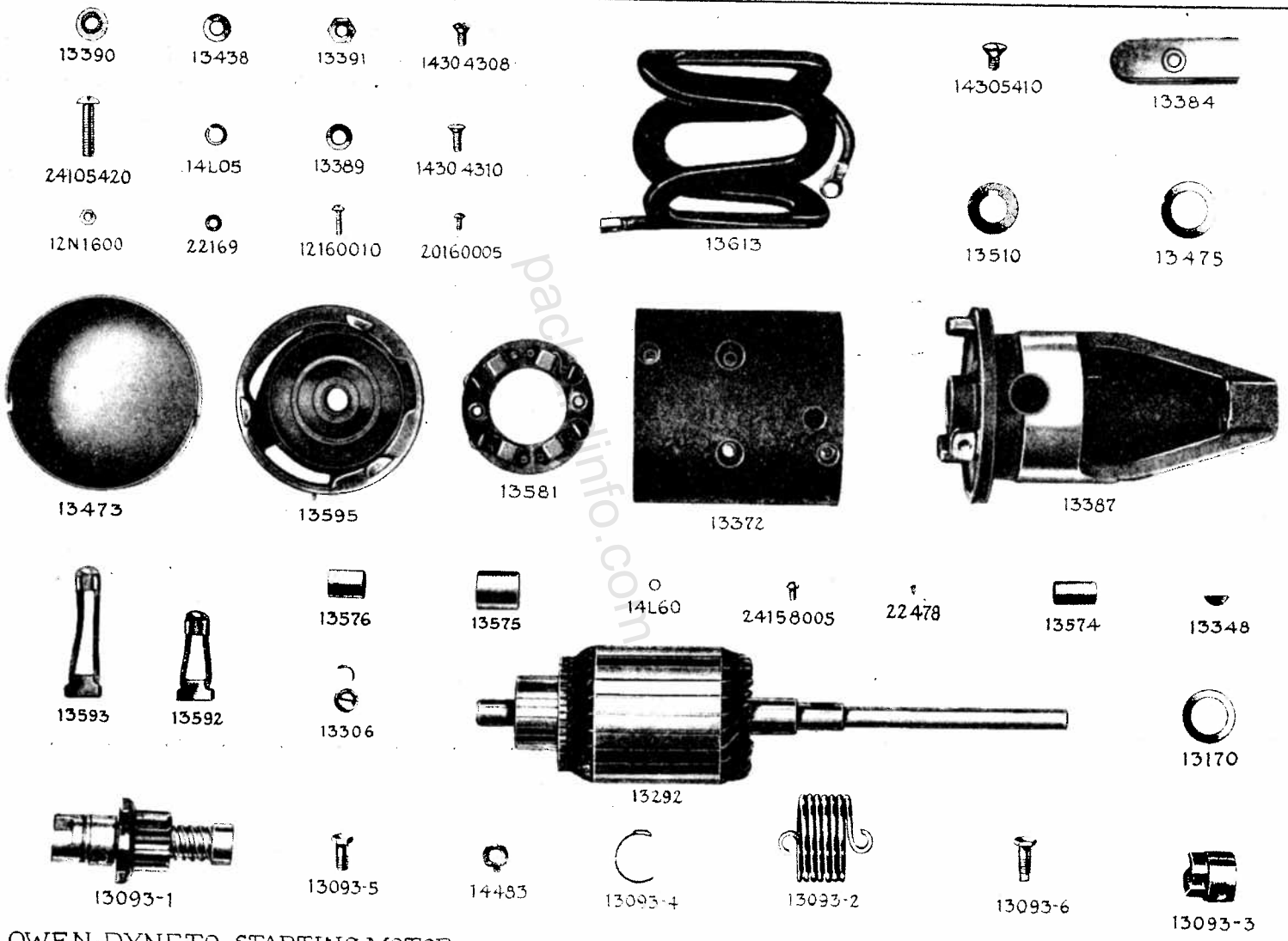

OWEN-DYNETO STARTING MOTOR
Type D1850 PACKARD APPLICATION

packardinfo.com

Piece No.	Name	No. Required 726 733	740 745	826 833	840 845	901 902	903 904
OD12N1600	Brush ring screw nut	x	x	x	x	..	..
OD14304308	Drive end and commutator end housing screw	x	x	x	x	..	..
OD14305409	Pole piece screw	..	x	..	x	..	..
OD20105420	Terminal post	..	x	..	x	..	..
OD20160005	Brush lead screw	..	x	..	x	..	..
OD24158005	Commutator end cover screw	x	x	x	x	..	..
OD12160010	Brush ring screw	x	x	x	x	..	..
OD12L05	Terminal post lockwasher	x	..	x	..	..	..
OD14304310	Bendix support attaching screw	x	..	x	..	..	..
OD14305410	Pole piece screw	x	..	x	..	..	..
OD20160006	Brush lead screw	x	..	x	..	..	..
OD24105420	Terminal post	x	..	x	..	..	..
OD13372	Field frame	x	..	x	..	..	..
OD13473	Commutator end cover	x	..	x	..	..	..
OD13475	Thrust washer (inner)	x	..	x	..	..	..
OD13510	Thrust washer (outer)	x	..	x	..	..	..
OD13574	Bendix support bushing (small)	x	..	x	..	..	..
OD13575	Bendix support bushing (large)	x	..	x	..	..	..
OD13576	Commutator end housing bushing	x	..	x	..	..	..
OD13581	Brush ring assembly	x	..	x	..	..	..
OD13592	Brush (short lead—3 used)	x	..	x	..	..	..
OD13593	Brush (long lead—1 used)	x	..	x	..	..	..
OD13595	Commutator end housing with bushing	x	..	x	..	..	..
OD13598	Commutator end housing assembled with brush ring (not illustrated) see part No. 13581 and No. 13595	x	..	x	..	..	..
OD13613	Field coil	x	..	x	..	..	..
OD13616	Commutator end housing assembly complete with brush ring and brushes (not illustrated)	x	..	x	..	..	..
OD13617	Brush lead insulation (not illustrated)	x	..	x	..	..	..

packardinfo.com

MOTOR STARTER MOTOR

(Owen-Dyneto Type DI-955 for 901-902)
(Owen-Dyneto Type DN-952 for 903-904)

The following parts are listed with the manufacturer's piece numbers and are to be ordered direct from Owen-Dyneto Corporation, Syracuse, N. Y., or nearest Service Station.

OD14L05	Terminal post lockwasher	..	..	..	..	x	x
OD12N1600	Brush ring screw nut	..	..	..	..	x	x
OD12160010	Brush ring screw	..	..	..	..	x	x
OD14304308	Commutator end housing screw	..	..	..	..	x	x
OD14304310	Bendix support attaching screw	..	..	..	..	x	x
OD14305410	Pole piece screw	..	..	..	..	x	x
OD20160006	Brush lead screw	..	..	..	..	x	x
OD24105420	Terminal post	..	..	..	..	x	x
OD24158005	Commutator end cover screw	..	..	..	..	x	x
OD13093-2	Bendix drive spring	..	..	..	..	x	x
OD13093-3	Bendix driving head	..	..	..	..	x	x
OD13093-4	Bendix spring clip	..	..	..	..	x	x
OD13093-5	Bendix lock screw	..	..	..	..	x	x
OD13093-6	Bendix driving screw	..	..	..	..	x	x
OD13119	Name plate (not illustrated)	..	..	..	..	x	x
OD13170	Armature shaft drive end shim washer (thin)	..	..	..	..	x	x
OD13292	Armature	..	..	..	..	x	..
OD13306	Brush spring	..	..	..	..	x	x
OD13348	Bendix drive key	..	..	..	..	x	x
OD13370	Field frame	..	..	..	..	..	x
OD13372	Field frame	..	..	..	..	x	..
OD13375	Pole piece	..	..	..	..	..	x

Printed in U. S. A.

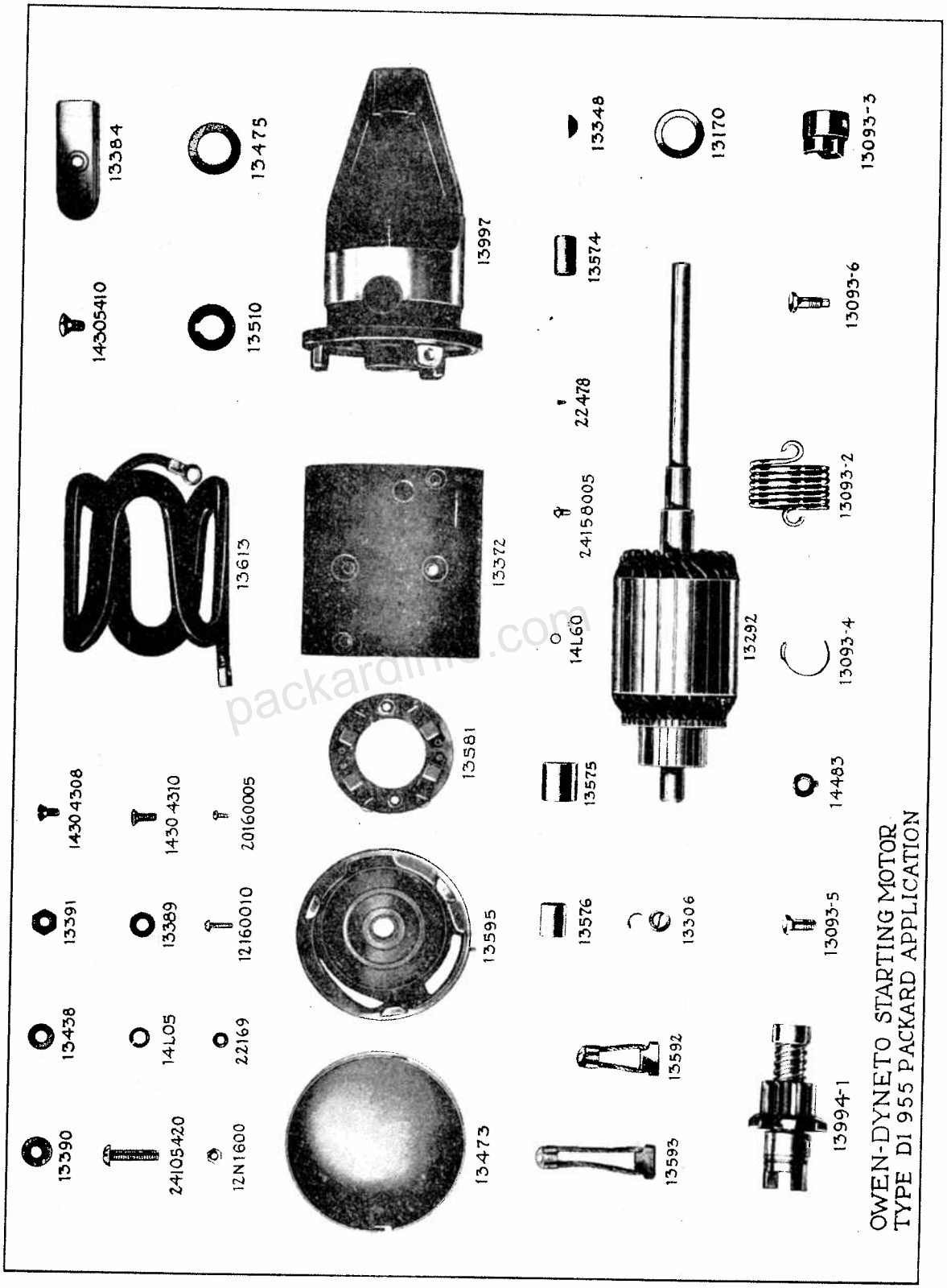

Owen-Dyneto Type DI-955

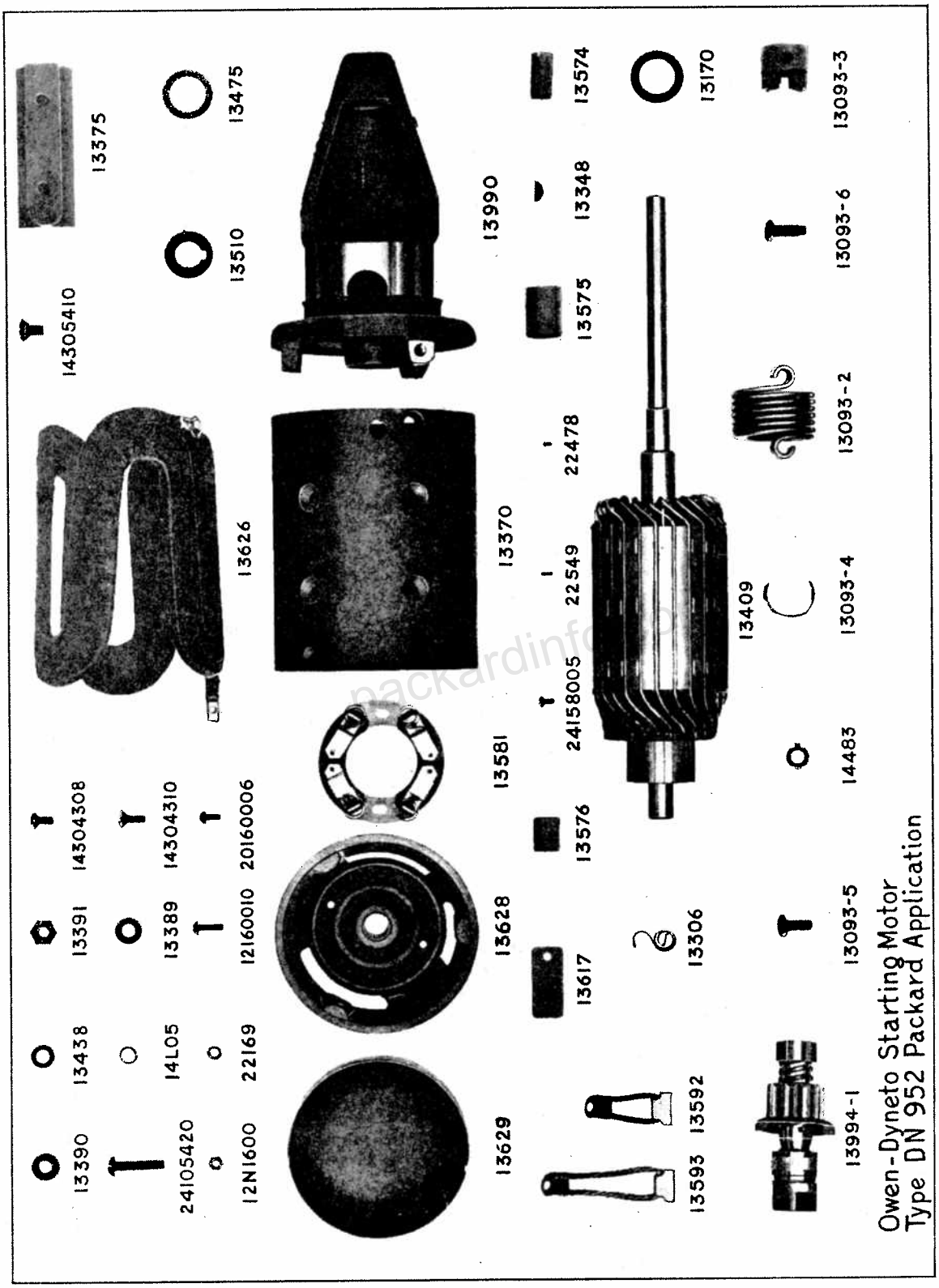

Owen-Dyneto Type DN-952

Printed in U. S. A.

Piece No.	Name	No. Required 726 733	740 745	826 833	840 845	901 902	903 904
0D13384	Pole piece	–	–	–	–	x	–
0D13389	Terminal post brass washer-thin	–	–	–	–	x	x
0D13390	Terminal post insulating bushing	–	–	–	–	x	x
0D13391	Terminal post nut	–	–	–	–	x	x
0D13409	Armature	–	–	–	–	x	x
0D13438	Terminal post brass washer-thick	–	–	–	–	–	x
0D13473	Commutator end cover	–	–	–	–	x	x
0D13475	Thrust washer-inner	–	–	–	–	x	–
0D13510	Thrust washer-outer	–	–	–	–	x	x
0D13574	Bendix support bushing-small	–	–	–	–	x	x
0D13575	Bendix support bushing-large	–	–	–	–	x	x
0D13576	Commutator end housing bushing	–	–	–	–	x	x
0D13581	Brush ring assembly	–	–	–	–	x	x
0D13592	Brush (short lead-3 used)	–	–	–	–	x	x
0D13593	Brush (long lead-1 used)	–	–	–	–	x	x
0D13595	Commutator end housing with bushing	–	–	–	–	x	x
0D13598	Commutator end housing assembled with brush ring (not illustrated) (see parts No.13581,No.13595)	–	–	–	–	x	–
0D13613	Field coil	–	–	–	–	x	–
0D13616	Commutator end housing assembly complete with brush ring and brushes (not illustrated)	–	–	–	–	x	–
0D13617	Brush lead insulation (not illustrated)	–	–	–	–	x	–
0D13626	Field coil	–	–	–	–	x	x
0D13627	Commutator end housing assembled with brush ring (not illustrated) (see parts No.13628,No.13581)	–	–	–	–	–	x
0D13628	Commutator end housing with bushing	–	–	–	–	–	x
0D13629	Commutator end cover	–	–	–	–	–	x
0D13634	Commutator end housing assembly complete with brush ring and brushes (not illustrated)	–	–	–	–	–	x
0D13990	Bendix housing	–	–	–	–	–	x
0D13994	Bendix drive complete (not illustrated)	–	–	–	–	x	x
0D13994-1	Bendix gear and shaft assembly	–	–	–	–	x	x
0D14483	Bendix drive lockwasher	–	–	–	–	x	x
0D22169	Brush lead screw and brush ring screw lockwasher	–	–	–	–	x	x
0D22478	Name plate screw	–	–	–	–	x	x
0D22549	Commutator end cover pin	–	–	–	–	–	x

MOTOR VACUUM PUMP

178455	Motor gear cover and vacuum pump assembly	1	1	–	–	–	–
178673	Motor vacuum pump equipment	1	–	–	–	–	–
178674	Motor vacuum pump equipment	–	1	–	–	–	–
178434	Motor vacuum pump crankcase	1	1	–	–	–	–
4156	Rivet 3/16 x 5/8" rd. hd.	8	8	–	–	–	–
167173	Motor vacuum pump crankcase gasket	1	1	–	–	–	–
179885	Motor vacuum pump cylinder and piston assembly	1	1	–	–	–	–
5787	Screw 1/4-28 x 7/8" hex. hd.	3	3	–	–	–	–
5502	Lockwasher 1/4" std.	3	3	–	–	–	–
178597	Motor vacuum pump cylinder gasket	1	1	–	–	–	–
167984	Motor vacuum pump to dash connection tube assembly	–	1	–	–	–	–
179024	Motor vacuum pump to dash connection tube assembly	1	–	–	–	–	–
5444	Union 5/16" flared tube	–	1	–	–	–	–
5426	Union 5/16" flared tube	1	–	–	–	–	–
129773	Motor vacuum pump to dash connection tube clip	1	1	–	–	–	–
179851	Motor vacuum pump to dash connection tube to frame clip	1	1	–	–	–	–
178021	Motor vacuum pump eccentric	1	1	–	–	–	–
5446	Cotter pin 1/8 x 2"	1	1	–	–	–	–
178435	Motor vacuum pump eccentric rod	1	1	–	–	–	–
178853	Motor vacuum pump to manifold tube assembly	–	1	–	–	–	–
179026	Motor vacuum pump to manifold tube assembly	1	–	–	–	–	–

packardinfo.com

Printed in U.S.A.

Piece No.	Name	No. Required 726 733	740 745	826 833	840 845	901 902	903 904
147188	Elbow 5/16" flared tube	1	1	-	-	-	-
178431	Motor vacuum pump piston pin	1	1	-	-	-	-
5034	Motor vacuum pump valve ball	2	2	-	-	-	-
167172	Motor vacuum pump valve plug-large	1	1	-	-	-	-
167171	Motor vacuum pump valve plug-small	1	1	-	-	-	-
179312	Motor vacuum pump valve plug gasket	2	2	-	-	-	-

MOTOR VIBRATION DAMPER

195918	Motor vibration damper assembly	1	1	1	1	1	1
183761	Motor vibration damper dowel pin	-	-	6	6	6	6
179955	Motor vibration damper facing	4	4	-	-	-	-
167968	Motor vibration damper flywheel assembly	1	1	-	-	-	-
167768	Dowel pin	1	1	-	-	-	-
195916	Motor vibration damper flywheel--front half assembly (after motor No.345775 and 194239)	-	-	-	-	1	1
183768	Motor vibration damper flywheel--front half (prior to motor No. 345776 and 194240)	-	-	1	1	1	1
195917	Motor vibration damper flywheel--rear half assembly (after motor No.345775 and 194239)	-	-	-	-	1	1
183769	Motor vibration damper flywheel--rear half (prior to motor No. 345776 and 194240)	-	-	1	1	1	1
195903	Motor vibration damper flywheel bushing (after motor No. 345775 and 194239)	-	-	-	-	2	2
183770	Motor vibration damper flywheel clamp screw	-	-	6	6	6	6
5504	Lockwasher 5/16"	-	-	6	6	6	6
4782	Motor vibration damper flywheel dowel pin 3/8 x 19/32"	1	1	-	-	-	-
158791	Motor vibration damper flywheel seal	1	1	-	-	-	-
158784	Motor vibration damper flywheel spring	6	6	-	-	-	-
190472	Motor vibration damper flywheel spring	-	-	12	12	12	12
158781	Motor vibration damper friction ring	1	1	-	-	-	-
185416	Motor vibration damper friction plate spacer	-	-	1	1	1	1
183775	Motor vibration damper hub assembly (prior to motor No. 345776 and 194240)	-	-	1	1	1	1
195919	Motor vibration damper hub assembly (after motor No.345775 and 194239)	-	-	-	-	1	1
183758	Motor vibration damper key	-	-	1	1	1	1
170089	Motor vibration damper hub	1	1	-	-	-	-
158782	Motor vibration damper hub sleeve	1	1	-	-	-	-

MOTOR WATER PUMP

Note: We no longer furnish the extension type fan pulley and water pump assembly for 745, replace with pump No.210545 and radiator shroud No.179037.

210544	Motor water pump assembly (supersedes 183961)	1	-	1	-	1	-
210545	Motor water pump assembly (supersedes 183960)	-	1	-	1	-	1
170154	Motor water pump body	1	-	-	-	-	-
210685	Motor water pump body (supersedes 183927)	-	-	1	-	1	-
170091	Motor water pump body	-	1	-	-	-	-
183928	Motor water pump body	-	-	-	1	-	1
129047	Motor water pump body gasket	1	1	1	1	1	1
156982	Motor water pump clamp plate (supersedes 156983)	1	1	1	1	1	1
175911	Stud	5	5	5	5	5	5
5504	Lockwasher 5/16"	5	5	5	5	5	5
7005	Nut 5/16-24	5	5	5	5	5	5
184714	Motor water pump felt	-	-	2	-	2	-
184715	Motor water pump felt	-	-	-	2	-	2
184713	Motor water pump felt retainer	-	-	2	2	2	2
171182	Motor water pump impeller	1	1	-	-	-	-
183964	Motor water pump impeller	-	-	1	1	1	1
117970	Motor water pump impeller screw	1	1	1	1	1	1
184718	Motor water pump oil cup	-	-	1	-	1	-

Piece No.	Name	No. Required 726 733	740 745	826 833	840 845	901 902	903 904
0D13384	Pole piece	-	-	-	-	x	-
0D13389	Terminal post brass washer-thin	-	-	-	-	x	x
0D13390	Terminal post insulating bushing	-	-	-	-	x	x
0D13391	Terminal post nut	-	-	-	-	x	x
0D13409	Armature	-	-	-	-	x	x
0D13438	Terminal post brass washer-thick	-	-	-	-	-	x
0D13473	Commutator end cover	-	-	-	-	x	x
0D13475	Thrust washer-inner	-	-	-	-	x	-
0D13510	Thrust washer-outer	-	-	-	-	x	x
0D13574	Bendix support bushing-small	-	-	-	-	x	x
0D13575	Bendix support bushing-large	-	-	-	-	x	x
0D13576	Commutator end housing bushing	-	-	-	-	x	x
0D13581	Brush ring assembly	-	-	-	-	x	x
0D13592	Brush (short lead-3 used)	-	-	-	-	x	x
0D13593	Brush (long lead-1 used)	-	-	-	-	x	x
0D13595	Commutator end housing with bushing	-	-	-	-	x	x
0D13598	Commutator end housing assembled with brush ring (not illustrated) (see parts No.13581,No.13595)	-	-	-	-	x	-
0D13613	Field coil	-	-	-	-	x	-
0D13616	Commutator end housing assembly complete with brush ring and brushes (not illustrated)	-	-	-	-	x	-
0D13617	Brush lead insulation (not illustrated)	-	-	-	-	x	-
0D13626	Field coil	-	-	-	-	x	x
0D13627	Commutator end housing assembled with brush ring (not illustrated) (see parts No.13628,No.13581)	-	-	-	-	-	x
0D13628	Commutator end housing with bushing	-	-	-	-	-	x
0D13629	Commutator end cover	-	-	-	-	-	x
0D13634	Commutator end housing assembly complete with brush ring and brushes (not illustrated)	-	-	-	-	-	x
0D13990	Bendix housing	-	-	-	-	-	x
0D13994	Bendix drive complete (not illustrated)	-	-	-	-	x	x
0D13994-1	Bendix gear and shaft assembly	-	-	-	-	x	x
0D14483	Bendix drive lockwasher	-	-	-	-	x	x
0D22169	Brush lead screw and brush ring screw lockwasher	-	-	-	-	x	x
0D22478	Name plate screw	-	-	-	-	x	x
0D22549	Commutator end cover pin	-	-	-	-	-	x

MOTOR VACUUM PUMP

178455	Motor gear cover and vacuum pump assembly	1	1	-	-	-	-
178673	Motor vacuum pump equipment	1	-	-	-	-	-
178674	Motor vacuum pump equipment	-	1	-	-	-	-
178434	Motor vacuum pump crankcase	1	1	-	-	-	-
4156	Rivet 3/16 x 5/8" rd. hd.	8	8	-	-	-	-
167173	Motor vacuum pump crankcase gasket	1	1	-	-	-	-
179885	Motor vacuum pump cylinder and piston assembly	1	1	-	-	-	-
5787	Screw 1/4-28 x 7/8" hex. hd.	3	3	-	-	-	-
5502	Lockwasher 1/4" std.	3	3	-	-	-	-
178597	Motor vacuum pump cylinder gasket	1	1	-	-	-	-
167984	Motor vacuum pump to dash connection tube assembly	-	1	-	-	-	-
179024	Motor vacuum pump to dash connection tube assembly	1	-	-	-	-	-
5444	Union 5/16" flared tube	-	1	-	-	-	-
5426	Union 5/16" flared tube	1	-	-	-	-	-
129773	Motor vacuum pump to dash connection tube clip	1	1	-	-	-	-
179851	Motor vacuum pump to dash connection tube to frame clip	1	1	-	-	-	-
178021	Motor vacuum pump eccentric	1	1	-	-	-	-
5446	Cotter pin 1/8 x 2"	1	1	-	-	-	-
178435	Motor vacuum pump eccentric rod	1	1	-	-	-	-
178853	Motor vacuum pump to manifold tube assembly	-	1	-	-	-	-
179026	Motor vacuum pump to manifold tube assembly	1	-	-	-	-	-

packardinfo.com

Printed in U.S.A.

Piece No.	Name	No. Required 726 733	740 745	826 833	840 845	901 902	903 904
147188	Elbow 5/16" flared tube	1	1	-	-	-	-
178431	Motor vacuum pump piston pin	1	1	-	-	-	-
5034	Motor vacuum pump valve ball	2	2	-	-	-	-
167172	Motor vacuum pump valve plug-large	1	1	-	-	-	-
167171	Motor vacuum pump valve plug-small	1	1	-	-	-	-
179312	Motor vacuum pump valve plug gasket	2	2	-	-	-	-

MOTOR VIBRATION DAMPER

195918	Motor vibration damper assembly	1	1	1	1	1	1
183761	Motor vibration damper dowel pin	-	-	6	6	6	6
179955	Motor vibration damper facing	4	4	-	-	-	-
167968	Motor vibration damper flywheel assembly	1	1	-	-	-	-
167768	Dowel pin	1	1	-	-	-	-
195916	Motor vibration damper flywheel--front half assembly (after motor No.345775 and 194239)	-	-	-	-	1	1
183768	Motor vibration damper flywheel--front half (prior to motor No. 345776 and 194240)	-	-	1	1	1	1
195917	Motor vibration damper flywheel--rear half assembly (after motor No.345775 and 194239)	-	-	-	-	1	1
183769	Motor vibration damper flywheel--rear half (prior to motor No. 345776 and 194240)	-	-	1	1	1	1
195903	Motor vibration damper flywheel bushing (after motor No. 345775 and 194239)	-	-	-	-	2	2
183770	Motor vibration damper flywheel clamp screw	-	-	6	6	6	6
5504	Lockwasher 5/16"	-	-	6	6	6	6
4782	Motor vibration damper flywheel dowel pin 3/8 x 19/32"	1	1	-	-	-	-
158791	Motor vibration damper flywheel seal	1	1	-	-	-	-
158784	Motor vibration damper flywheel spring	6	6	-	-	-	-
190472	Motor vibration damper flywheel spring	-	-	12	12	12	12
158781	Motor vibration damper friction ring	1	1	-	-	-	-
185416	Motor vibration damper friction plate spacer	-	-	1	1	1	1
183775	Motor vibration damper hub assembly (prior to motor No. 345776 and 194240)	-	-	1	1	1	1
195919	Motor vibration damper hub assembly (after motor No.345775 and 194239)	-	-	-	-	1	1
183758	Motor vibration damper key	-	-	1	1	1	1
170089	Motor vibration damper hub	1	1	-	-	-	-
158782	Motor vibration damper hub sleeve	1	1	-	-	-	-

MOTOR WATER PUMP

Note: We no longer furnish the extension type fan pulley and water pump assembly for 745, replace with pump No.210545 and radiator shroud No.179037.

210544	Motor water pump assembly (supersedes 183961)	1	-	1	-	1	-
210545	Motor water pump assembly (supersedes 183960)	-	1	-	1	-	1
170154	Motor water pump body	1	-	-	-	-	-
210685	Motor water pump body (supersedes 183927)	-	-	1	-	1	-
170091	Motor water pump body	-	1	-	-	-	-
183928	Motor water pump body	-	-	-	1	-	1
129047	Motor water pump body gasket	1	1	1	1	1	1
156982	Motor water pump clamp plate (supersedes 156983)	1	1	1	1	1	1
175911	Stud	5	5	5	5	5	5
5504	Lockwasher 5/16"	5	5	5	5	5	5
7005	Nut 5/16-24	5	5	5	5	5	5
184714	Motor water pump felt	-	-	2	-	2	-
184715	Motor water pump felt	-	-	-	2	-	2
184713	Motor water pump felt retainer	-	-	2	2	2	2
171182	Motor water pump impeller	1	1	-	-	-	-
183964	Motor water pump impeller	-	-	1	1	1	1
117970	Motor water pump impeller screw	1	1	1	1	1	1
184718	Motor water pump oil cup	-	-	1	-	1	-

Piece No.	Name	No. Required 726 733	740 745	826 833	840 845	901 902	903 904
184722	Motor water pump oil cup	-	-	-	1	-	1
173543	Motor water pump shaft assembly	1	-	-	-	-	-
173544	Motor water pump shaft assembly	-	1	-	-	-	-
170094	Motor water pump shaft bushing	1	1	-	-	-	-
117971	Set screw	1	1	-	-	-	-
5502	Lockwasher 1/4"	1	1	-	-	-	-
170925	Motor water pump shaft bearing	1	1	1	1	1	1
175919	Lubricator connector (Alemite type-45° elbow male-1/8" std. pipe thd.)	1	1	-	-	-	-
114955	Lubricator connector (Alemite type-A male-straight	1	1	-	-	-	-
116272	Lubricator connector dust cap (Alemite)	1	1	-	-	-	-
170926	Motor water pump shaft bearing oil thrower	2	2	-	-	-	-
170929	Motor water pump shaft bearing retainer	1	1	-	-	-	-
170930	Motor water pump shaft bearing retainer gasket	1	1	-	-	-	-
184307	Motor water pump shaft bearing retainer gasket-thick	-	-	1	1	1	1
183925	Motor water pump shaft bearing retainer gasket-thin	-	-	1	1	1	1
186022	Motor water pump shaft bearing seal and retainer assembly	-	-	1	1	1	1
5687	Screw 1/4-28 x 5/8" fill. hd.	4	4	4	4	4	4
5502	Lockwasher 1/4" std.	4	4	4	4	4	4
183959	Motor water pump shaft bearing seal-front	-	-	1	1	1	1
184596	Motor water pump shaft bearing seal-rear	-	-	1	1	1	1
184585	Motor water pump shaft bearing spacer	-	-	1	-	1	-
184586	Motor water pump shaft bearing spacer	-	-	-	1	-	1
170109	Motor water pump shaft dust washer	2	2	-	-	-	-
170928	Motor water pump shaft bearing dust washer retainer-inner	2	2	-	-	-	-
172161	Motor water pump shaft bearing dust washer retainer-outer	1	1	-	-	-	-
173542	Motor water pump shaft collar	1	1	-	-	-	-
173545	Motor water pump shaft collar key	2	2	-	-	-	-
183957	Motor water pump shaft and fan pulley assembly	-	-	1	-	1	-
183956	Motor water pump shaft and fan pulley assembly	-	-	-	1	-	1
67618	Motor water pump shaft packing	1	1	-	-	-	-
215543	Motor water pump shaft packing	-	-	1	1	1	1
175552	Motor water pump shaft packing nut	1	1	-	-	-	-
183795	Motor water pump shaft packing nut	-	-	1	1	1	1

RADIATOR

191066	Motor fan	1	-	1	-	1	-
191065	Motor fan	-	1	-	1	-	1
7886	Screw 5/16-24 x 5/8" hex. hd.	4	4	4	4	-	-
5449	Screw 5/16-24 x 3/4" hex. hd.	-	-	-	-	4	4
5504	Lockwasher 5/16"	4	4	4	4	4	4
174412	Motor fan belt (shipped in pairs only)	2	2	2	2	2	2
174406	Motor fan pulley	1	1	-	-	-	-
170074	Motor fan pulley nut	1	1	1	1	1	1
5510	Lockwasher 1/2"	1	1	1	1	1	1
4551	Woodruff key No. 5	1	1	-	-	-	-
5785	Woodruff key No. 7	1	1	1	1	1	1
170425	Radiator assembly	1	-	-	-	-	-
180511	Radiator assembly	-	-	1	-	-	-
172174	Radiator assembly (used on 740)	-	1	-	-	-	-
179316	Radiator assembly (used on 745)	-	1	-	-	-	-
180512	Radiator assembly	-	-	-	1	-	-
194438	Radiator assembly	-	-	-	-	1	-
194439	Radiator assembly	-	-	-	-	-	1
139803	Radiator bonnet ledge liner	x	x	x	x	-	-
186953	Radiator bonnet ledge liner	-	-	-	-	2	2
139459	Radiator bonnet ledge liner rivet (R. H. tub 9/64 x 3/16")	28	28	28	28	-	-
187260	Radiator bonnet ledge liner hook	-	-	-	-	4	4
7008	Nut No. 8-32	-	-	-	-	4	4
191654	Radiator bonnet ledge liner hook saddle	-	-	-	-	2	2
203971	Radiator cap and ornament assembly	-	-	-	-	-	1

packardinfo.com

Piece No.	Name	No. Required 726 733	740 745	826 833	840 845	901 902	903 904
191914	Radiator cap assembly	-	-	-	-	1	-
191907	Radiator cap gasket	-	-	-	-	1	-
203803	Radiator cap gasket (supersedes 194830)	-	-	-	-	-	1
191909	Radiator cap gasket spring	-	-	-	-	1	-
203809	Radiator cap gasket spring (supersedes 194834)	-	-	-	-	-	1
191905	Radiator cap lock plate	-	-	-	-	1	-
194829	Radiator cap lock plate	-	-	-	-	-	1
5944	Screw 5/16-18 x 3/8" fill. hd.	-	-	-	-	1	-
5504	Lockwasher 5/16"	-	-	-	-	1	-
191906	Radiator cap lock plate gasket	-	-	-	-	1	-
194831	Radiator cap lock plate gasket	-	-	-	-	-	1
194891	Radiator cap safety chain assembly	-	-	-	-	-	1
209374	Screw	-	-	-	-	-	1
5504	Lockwasher 5/16"	-	-	-	-	-	1
170087	Radiator core and anchorage assembly	1	-	-	-	-	-
184837	Radiator core and anchorage assembly	-	-	1	-	-	-
191849	Radiator core and anchorage assembly	-	-	-	-	1	-
170243	Radiator core and anchorage assembly (used on 740)	-	1	-	-	-	-
184838	Radiator core and anchorage assembly	-	-	-	1	-	-
191850	Radiator core and anchorage assembly	-	-	-	-	-	1
175716	Radiator core and anchorage assembly (used on 745 custom)	-	1	-	-	-	-
175287	Radiator core and anchorage assembly (used on 745) (prior to frame No.183206)	-	1	-	-	-	-
179296	Radiator core and anchorage assembly (used on 745) (after frame No.183205)	-	1	-	-	-	-
5427	Radiator core to radiator shutter bolt 5/16-24 x 1/2" hex. hd.	4	4	4	4	6	6
5676	Radiator core to radiator shutter bolt-upper No. 10-32 x 3/8" rnd. hd. mach.	-	-	1	1	-	-
5385	Lockwasher 5/16"	4	4	4	4	6	6
5500	Lockwasher No. 10	-	-	1	1	-	-
7003	Nut No. 10-32	-	-	1	1	-	-
120513	Radiator core and anchorage support stud washer	x	x	x	x	-	-
190938	Radiator core and anchorage support stud washer	-	-	-	-	2	2
5514	Lockwasher 5/16"	2	2	2	2	-	-
7010	Nut 5/16-18	2	2	2	2	-	-
169554	Plain washer 5/8" special	2	2	2	2	-	-
190939	Radiator core and anchorage stud spacer-upper	-	-	-	-	2	2
191782	Radiator core and anchorage stud spacer-lower	-	-	-	-	2	2
191787	Radiator core and anchorage stud nut special	-	-	-	-	2	2
4319	Cotter pin	-	-	-	-	2	2
191786	Radiator core and anchorage stud spring	-	-	-	-	2	2
191785	Radiator core and anchorage stud shim	-	-	-	-	2	2
190879	Radiator to dash tie rod-left	-	-	-	-	1	-
190880	Radiator to dash tie rod-right	-	-	-	-	1	-
190881	Radiator to dash tie rod-left	-	-	-	-	-	1
190882	Radiator to dash tie rod-right	-	-	-	-	-	1
170428	Radiator to dash tie rod assembly	1	-	1	-	-	-
170500	Radiator to dash tie rod assembly (used on 740 and 745 custom)	-	1	-	1	-	-
175334	Radiator to dash tie rod assembly (used on 745)	-	1	-	-	-	-
7005	Nut 5/16-24 plain	1	1	1	1	-	-
7861	Clamp bolt 5/16-24 x 1" hex. hd.	1	1	1	1	-	-
7810	Screw 5/16-24 x 1-1/4" hex. hd.	-	-	-	-	1	1
7005	Nut 5/16-24	1	1	1	1	1	1
5004	Lockwasher 5/16"	1	1	1	1	1	1
190960	Radiator to dash tie rod washer	-	-	-	-	4	4
5514	Lockwasher 5/8"	-	-	-	-	2	2
7010	Nut 5/8-18	-	-	-	-	4	4
158608	Radiator to dash tie rod bracket	1	1	-	-	-	-
182103	Radiator to dash tie rod bracket	-	-	1	1	-	-
5764	Screw 1/4-28 x 3/4" oval hd.	2	2	2	2	-	-
62065	Washer 17/64 x 3/4" plain	2	2	2	2	-	-
5502	Lockwasher 1/4"	2	2	2	2	-	-
7004	Nut 1/4-28	2	2	2	2	-	-
8000	Screw No. 10-32 x 1/2" O. H. mach.	2	2	2	2	-	-
5500	Lockwasher 3/16"	2	2	2	2	-	-
7003	Nut No. 10-32 plain	2	2	2	2	-	-
194892	Radiator core to shell liner side-lower	-	-	-	-	2	2

Piece No.	Name	No. Required 726 733	740 745	826 833	840 845	901 902	903 904
194893	Radiator core to shell liner side upper					2	2
194894	Radiator core to shell liner top					2	2
111752	Radiator drain cock (1/4" pipe std.)	1	1	1	1	1	1
166896	Radiator emblem	1	1	1	1	..	..
5447	Lockwasher (1/4" shakeproof)	1	1			..	..
183013	Radiator emblem spring	1	1	1	1	..	..
174642	Radiator hose outlet (used on 745) (3 x 1 1/2" I. D.)	..	2	..	..	..	..
170431	Radiator hose outlet (used on 740 and 745 custom) (8 3/4 x 1 1/2" I. D.)	1	1	1	1	..	..
39397	Radiator hose outlet	..	..	..	..	1	1
170430	Radiator hose inlet (used on 740-745) (4 7/8 x 1 1/2" I. D.) (after frame No. 183205 for 745)	1	1	1	1	..	..
175288	Radiator hose inlet (used on 745) (13 1/8 x 1 1/2" I. D.) (prior to frame No. 183206)	..	1	..	..	..	..
163199	Radiator hose inlet (used on 745 custom) (6 3/4 x 1 1/2" I. D.)	..	1	..	..	..	..
194857	Radiator hose inlet	..	..	..	..	1	1
163198	Radiator hose clamp	4	6	4	4	..	..
142989	Radiator hose clamp	..	..	..	..	4	4
179294	Radiator inlet tube (used on 745) (after frame No. 183205)	..	1	..	..	..	..
7005	Nut (3/16"—24 plain hex.) (used on 745) (after frame No. 183205)	..	4	..	..	..	..
5504	Lockwasher (used on 745) (after frame No. 183205)	..	4	..	..	..	..
179295	Radiator inlet tube gasket (used on 745) (after frame No. 183205)	..	1	..	..	..	..
191771	Radiator shell brace—left	..	..	..	..	1	1
191772	Radiator shell brace—right	..	..	..	..	1	1
194838	Radiator shell brace gasket	..	..	..	..	2	2
194841	Radiator shell brace screw plate assembly	..	..	..	..	2	2
190967	Screw (long)	..	..	..	..	4	4
190968	Screw (short)	..	..	..	..	6	6
5506	Lockwasher	..	..	..	..	10	10
190966	Radiator shell brace screw lug	..	..	..	..	2	2
178053	Radiator shell and thimble assembly (used on 726-733-740)	1	1	1	1	..	..
178054	Radiator shell and thimble assembly (used on 745)	..	1	..	..	..	..
190964	Radiator shell and thimble assembly	..	..	..	..	1	1
178055	Radiator shell and thimble assembly (used on 745 custom)	..	1	..	..	..	..
8224	Radiator shell to core and anchorage assembly screw (No. 10—32 x 5/8" F. H.)	10	10	12	12	..	..
8201	Radiator shell to core and anchorage assembly screw (1/4"—28 x 5/8" csunk. hd.)	..	..	..	..	10	10
5500	Lockwasher (3/16")	10	10	10	10	..	..
5502	Lockwasher (1/4")	..	..	..	..	10	10
3866	Washer (3/16")	10	10	12	12	..	..
3868	Washer (1/4")	..	..	..	..	10	10
7003	Nut (No. 10—32 plain)	10	10	12	12	..	..
7004	Nut (1/4"—20)	..	..	..	..	10	10
201002	Radiator shell motor starting crank hole cover and emblem assembly	..	..	..	..	1	1
179037	Radiator shroud assembly (used on 745) (after frame No. 183205)	..	1	..	..	..	..
170432	Radiator shutter assembly (726-733-740)	1	1	..	..	..	..
180515	Radiator shutter assembly (black enameled)	..	..	1	1	..	..
180400	Radiator shutter assembly (specify color)	..	..	1	1	..	..
178766	Radiator shutter assembly (used on 745) (specify color)	..	1	..	..	..	..
191706	Radiator shutter assembly (black enamel)	..	..	..	..	1	1
170433	Radiator shutter assembly (used on 745 custom)	..	1	..	..	..	..
191707	Radiator shutter assembly (specify color)	..	..	..	..	1	1
196846	3/16" spring washer	..	..	..	..	x	x
7003	Radiator shutter to radiator shell screw nut (No. 10—32)	4	4	4	4	4	4
5500	Radiator shutter to radiator shell screw lockwasher (3/16")	4	4	4	4	4	4
5573	Radiator shutter to radiatpr shell screw (No. 10—32 x 1/2" F. H. mach.)	4	4	4	4	4	4
159244	Radiator shutter louver and pivot pin assembly	15	15	15	15	..	..
194510	Radiator shutter louver and pivot pin assembly—right inner	..	..	..	..	7	7
159243	Radiator shutter louver and pivot pin assembly (used on 745 custom) (specify color)	..	15	..	..	..	..
194509	Radiator shutter louver and pivot pin assembly—left inner	..	..	..	..	7	7
171792	Radiator shutter louver and pivot pin assembly—right	1	1	1	1	..	..
194512	Radiator shutter louver and pivot pin assembly—right outer	..	..	..	..	1	1
171793	Radiator shutter louver and pivot pin assembly—right (used on 745 custom) (specify color)	..	1	..	..	..	..
194511	Radiator shutter louver and pivot pin assembly—left outer	..	..	..	..	1	1

Piece No.	Name	No. Required 726 733	740 745	826 833	840 845	901 902	903 904
171814	Radiator shutter louver operating bar	1	1	1	1	..	..
159858	Radiator shutter louver operating bar bracket	1	1	..	..	..	..
4146	Rivet (⅛ x ⅜″ rnd. hd.)	1	1	..	..	..	..
159859	Radiator shutter louver operating bar bracket trunnion	1	1	..	..	..	..
158868	Radiator shutter louver to operating bar rivet	15	15	..	..	..	..
159857	Radiator shutter louver to operating bar rivet	1	1	..	..	..	..
159231	Radiator shutter motor starting crank hole cover	1	1	1	1	..	..
159245	Radiator shutter motor starting crank hole cover ring	1	1	1	1	..	..
170906	Radiator shutter operating lever	1	1	..	..	..	..
180518	Radiator shutter operating lever	..	..	1	1	..	..
180521	Radiator shutter operating lever bracket	..	..	1	1	..	..
180525	Radiator shutter operating lever and connecting rod assembly	..	..	1	1	..	..
180526	Radiator shutter operating lever connecting rod yoke end pin	..	..	1	1	..	..
4690	Cotter pin (1/16 x 3/8″)	..	..	1	1	..	..
170412	Radiator shutter operating lever pivot pin	1	1	..	..	..	..
180520	Radiator shutter operating lever pivot pin	..	..	1	1	..	..
159689	Radiator shutter operating lever trunnion	1	1	..	..	..	..
3868	Washer (¼″ plain "N" std.)	1	1	..	..	..	..
170841	Radiator shutter operating rod assembly	1	1	..	..	..	..
7523	Yoke end pin (3/16″)	1	1	..	..	..	..
4690	Cotter pin (1/16 x 3/8″)	1	1	..	..	..	..
7004	Nut (¼″—28)	2	2	..	..	..	..
5502	Lockwasher (¼″)	1	1	..	..	..	..
184711	Radiator shutter operating rod yoke end assembly	..	..	1	1	..	..
194278	Radiator shutter operating rod yoke end assembly	..	..	..	..	1	1
184709	Radiator shutter operating rod	..	..	1	1	..	..
194279	Radiator shutter operating rod	..	..	..	..	1	1
5504	Lockwasher (5/16″)	..	..	1	1	1	1
7005	Nut (5/16″ plain)	..	..	2	2	2	2
184710	Radiator shutter operating rod yoke end	..	..	1	1	1	1
180523	Radiator shutter operating rod yoke end pin	..	..	1	1	1	1
4690	Cotter pin (1/16 x 3/8″)	..	..	1	1	1	1
7729	Radiator shutter panel screw (No. 10—32 x 11/32″ fill. hd.)	12	12	12	12	15	15
7003	Nut (No. 10—32 plain)	12	12	12	12	15	15
5500	Lockwasher (3/16″)	12	12	12	12	15	15
177669	Radiator shutter spring	1	1	1	1	1	1
170529	Radiator shutter thermostat assembly	1	1	..	..	..	..
180531	Radiator shutter thermostat	..	..	1	1	1	1
21662	Gasket	1	1	..	..	..	..
7008	Nut (½″—20)	..	..	1	1	1	1
5510	Lockwasher (½″)	..	..	1	1	1	1
180533	Radiator shutter thermostat cover and bushing assembly	..	..	1	1	1	1
180535	Radiator shutter thermostat cover gasket	..	..	2	2	2	2
180543	Radiator shutter thermostat lever (outer) assembly	..	..	1	1	1	1
5502	Lockwasher (¼″)	..	..	1	1	1	1
7004	Nut (¼″—28)	..	..	1	1	1	1
180536	Radiator shutter thermostat lever—inner	..	..	2	2	2	2
180538	Radiator shutter thermostat lever shaft	..	..	1	1	1	1
180539	Radiator shutter thermostat lever shaft bushing	..	..	1	1	1	1
180540	Radiator shutter thermostat lever shaft packing	..	..	1	1	1	1
180542	Radiator shutter thermostat lever shaft packing nut	..	..	1	1	1	1
180541	Radiator shutter thermostat lever shaft packing spring	..	..	1	1	1	1
180826	Radiator shutter thermostat lever shaft packing washer	..	..	1	1	1	1
180537	Radiator shutter thermostat lever spacer	..	..	1	1	1	1
180545	Radiator shutter thermostat lever outer universal joint	..	..	1	1	1	1
170416	Radiator shutter thermostat push rod	1	1	..	..	..	..
180546	Radiator shutter thermostat push rod	..	..	1	1	1	1
7004	Nut (¼″—28)	1	1	..	..	..	..
5502	Lockwasher (¼″)	1	1	..	..	..	..
180547	Radiator shutter thermostat push rod end pin	..	..	1	1	1	1
5560	Cotter pin (1/16 x 3/8″)	..	..	1	1	..	..

packardinfo.com

Piece No.	Name	No. Required 726 733	740 745	826 833	840 845	901 902	903 904
180517	Radiator shutter thermostat push rod nut	-	-	1	1	1	1
170942	Radiator shutter thermostat support-front	1	1	-	-	-	-
170878	Radiator shutter thermostat support front gasket	1	1	-	-	-	-
7003	Nut No. 10-32	8	8	-	-	-	-
5500	Lockwasher No. 10	8	8	-	-	-	-
178829	Radiator splasher left assembly (used on 745) (specify color)	-	1	-	-	-	-
178742	Radiator splasher left assembly (used on 726-733-740)	1	1	-	-	-	-
180899	Radiator splasher left assembly	-	-	1	1	-	-
191725	Radiator splasher left assembly	-	-	-	-	1	1
178830	Radiator splasher right assembly (used on 745) (specify color)	-	1	-	-	-	-
178743	Radiator splasher right assembly (used on 726-733-740)	1	1	-	-	-	-
180900	Radiator splasher right assembly	-	-	1	1	-	-
191726	Radiator splasher right assembly	-	-	-	-	1	1
178744	Radiator splasher bolt front spacer (used on 726-733-740)	2	2	-	-	-	-
184712	Radiator splasher bolt front spacer	-	-	2	2	-	-
194699	Radiator splasher bolt front spacer	-	-	-	-	2	2
178826	Radiator splasher bolt front spacer (used on 745) (specify color)	-	2	-	-	-	-
7859	Radiator splasher bolt front	2	2	-	-	-	-
5852	Radiator splasher bolt front 1/4-28 x 1-7/8" hex. hd.	-	-	2	2	-	-
5971	Radiator splasher bolt front 1/4-28 x 2" hex. hd.	-	-	-	-	2	2
3868	Washer 1/4"	2	2	2	2	2	2
5502	Lockwasher 1/4"	2	2	2	2	2	2
191266	Radiator splasher to frame cross tube grommet-right	-	-	-	-	1	1
191267	Radiator splasher to frame cross tube grommet-left	-	-	-	-	1	1
170439	Radiator splasher to frame front channel support bracket	1	-	1	-	-	-
191638	Radiator splasher to frame front channel support bracket	-	-	-	-	1	1
170442	Radiator splasher to frame front channel support bracket	-	1	-	1	-	-
7827	Bolt-screw-1/4-28 x 3/4" hex. hd.	1	1	1	1	2	2
7824	Bolt-screw-1/4-28 x 5/8" hex. hd.	-	-	-	-	1	1
5502	Lockwasher 1/4"	1	1	1	1	3	3
62065	Washer 17/64 x 3/4" plain	1	1	1	1	-	-
7004	Nut 1/4-28 plain	-	-	-	-	3	3
7827	Radiator splasher reinforcement screw 1/4-28 x 3/4" hex. hd.	1	1	1	1	-	-
7004	Nut 1/4-28 plain	1	1	1	1	-	-
62065	Radiator splasher screw boss support washer 1/4" plain	1	1	1	1	-	-
5502	Washer 1/4" lock	1	1	1	1	-	-
5694	Radiator thimble screw No. 8-32 x 3/8"	8	8	8	8	-	-
5695	Lockwasher No. 8	8	8	-	-	-	-
5500	Lockwasher No. 8-32	-	-	8	8	-	-
191888	Radiator thimble	-	-	-	-	1	1
5694	Screw No. 8-32 x 3/8" fill. hd.	-	-	-	-	8	8
5695	Lockwasher No. 8	-	-	-	-	8	8
170905	Radiator thimble cover	1	-	1	-	-	-
170907	Radiator thimble cover (used on 740)	-	1	-	1	-	-
171184	Radiator thimble cover (used on 745)	-	1	-	-	-	-
170848	Radiator thimble cover lock (used on 740)	1	1	1	1	-	-
171186	Radiator thimble cover lock (used on 745)	-	1	-	-	-	-
170901	Radiator thimble cover gasket (used on 740)	1	1	1	1	-	-
171178	Radiator thimble cover gasket (used on 745)	-	1	-	-	-	-
170863	Radiator thimble cover gasket retainer (used on 740)	1	1	1	1	-	-
171185	Radiator thimble cover gasket retainer (used on 745)	-	1	-	-	-	-
5694	Screw No. 8-32 x 3/8"	1	1	1	1	-	-
5695	Lockwasher No. 8	1	1	1	1	-	-
191910	Radiator thimble gasket	-	-	-	-	1	1
170902	Radiator thimble packing	1	1	1	1	-	-
170846	Radiator thimble packing nut	1	1	1	1	-	-

REAR AXLE

170225	Rear axle brake support plate flange	2	-	2	-	2	-
157763	Rear axle case assembly	1	-	-	-	-	-
180216	Rear axle case assembly	-	-	1	-	-	-
190522	Rear axle case assembly	-	-	-	-	1	-
157767	Rear axle case assembly	-	1	-	-	-	-
180217	Rear axle case assembly	-	-	-	1	-	-
190523	Rear axle case assembly	-	-	-	-	-	1
139508	Rear axle case to brake assembly screw-long	4	4	4	4	-	-
190556	Rear axle case to brake assembly stud-long	-	-	-	-	4	4

Revised April, 1934

Printed in U.S.A.

Piece No.	Name	No. Required 726 733	740 745	826 833	840 845	901 902	903 904
138672	Rear axle case to brake assembly screw 7/16 - 20 x 2 " hex. hd. special	12	12	12	12	-	-
190524	Rear axle case to brake assembly stud	-	-	-	-	12	12
5508	Lockwasher 7/16"	16	16	16	16	16	16
7007	Nut 7/16-20 plain hex.	-	-	-	-	16	16
140433	Rear axle case cover	1	-	1	-	-	-
194185	Rear axle case cover	-	-	-	-	1	-
141344	Rear axle case cover	-	1	-	1	-	-
194183	Rear axle case cover	-	-	-	-	-	1
7874	Screw 3/8-24 x 5/8" hex. hd.	10	-	10	-	10	-
7952	Screw 7/16-20 x 7/8" hex. hd.	-	10	-	10	-	10
5997	Stud 3/8-24 x 1-3/16"	-	-	-	-	10	-
5999	Stud 7/16-20 x 1-1/4"	-	-	-	-	-	10
7006	Nut 3/8-24	-	-	-	-	10	-
7007	Nut 7/16-20	-	-	-	-	-	10
5506	Lockwasher 3/8"	10	-	10	-	10	-
5508	Lockwasher 7/16"	-	10	-	10	-	10
107889	Rear axle case cover oil level hole plug	1	1	1	1	1	1
20075	Gasket 1-1/4" annular	1	1	1	1	1	1
195923	Rear axle case cover gasket	1	-	1	-	1	-
195924	Rear axle case cover gasket	-	1	-	1	-	1
197891	Rear axle case ventilator nipple (after frame No.194711)	-	-	-	-	-	1
197890	Rear axle case ventilator nipple cap (after frame No.194711)	-	-	-	-	-	1
170281	Rear axle shaft (prior to frame No.296659 for 726 and 296583 for 733)	2	-	-	-	-	-
179859	Rear axle shaft (after frame No. 296658 for 726 and 296582 for 733)	2	-	2	-	-	-
190521	Rear axle shaft	-	-	-	-	2	-
138163	Rear axle shaft (prior to frame No. 186080 for 740 and 185623 for 745)	-	2	-	-	-	-
179860	Rear axle shaft (after frame No. 186079 for 740 and 185622 for 745)	-	2	-	2	-	-
190546	Rear axle shaft	-	-	-	-	-	2
120489	Rear axle shaft key	2	-	2	-	2	-
140073	Rear axle shaft key (1/4 x 1/4 x 3-1/2")	-	2	-	2	-	2
170262	Rear axle shaft nut	2	-	2	-	2	-
124631	Rear axle shaft nut	-	2	-	2	-	2
4334	Rear axle shaft cotter 3/16 x 1-3/4"	2	2	2	2	2	2
3896	Rear axle shaft washer 1" plain	2	2	2	2	2	2
176592	Rear axle shaft bearing assembly (Timken No. 332)	4	-	4	-	4	-
62580	Rear axle shaft bearing	-	2	-	2	-	2
170287	Rear axle bearing adjusting nut assembly	2	-	2	-	2	-
138600	Rear axle shaft bearing check nut	-	2	-	2	-	2
170289	Rear axle shaft bearing adjusting nut lock	2	-	2	-	2	-
170291	Rear axle shaft bearing adjusting nut lock screw	4	-	4	-	4	-
120813	Lockwire 8" long	2	2	2	2	2	2
138602	Rear axle shaft bearing check nut lockwasher	-	2	-	2	-	-
138624	Screw 5/16-24 x 3/4" hex. hd.	-	4	-	4	-	4
170290	Rear axle shaft bearing adjusting nut oil seal	2	-	2	-	2	-
170225	Rear axle brake support plate flange	2	-	-	-	-	-
185436	Rear axle shaft bearing retainer and oil seal assembly	-	2	-	2	-	2
138524	Rear axle shaft bearing retainer washer (prior to frame No.189574)	-	2	-	2	-	-
138629	Rear axle shaft bearing retainer washer nut (prior to frame No. 189574)	-	2	-	2	-	-
138693	Rear axle shaft bearing retainer washer nut lockwire (prior to frame No. 189574)	-	2	-	2	-	-
144217	Rear axle shaft bearing shim	-	x	-	x	-	x
170286	Rear axle shaft bearing sleeve	2	-	2	-	2	-
4559	Plug 1/8" headless pipe	2	-	2	-	2	-
163805	Rear axle shaft bearing sleeve	-	2	-	2	-	2
170283	Rear axle shaft bearing sleeve dust washer	2	-	2	-	2	-
124035	Rear axle shaft bearing sleeve dust washer	-	2	-	2	-	2
170280	Rear axle shaft bearing sleeve dust washer retainer	2	-	2	-	2	-
124715	Rear axle shaft bearing sleeve dust washer retainer	-	2	-	2	-	2

packardinfo.com

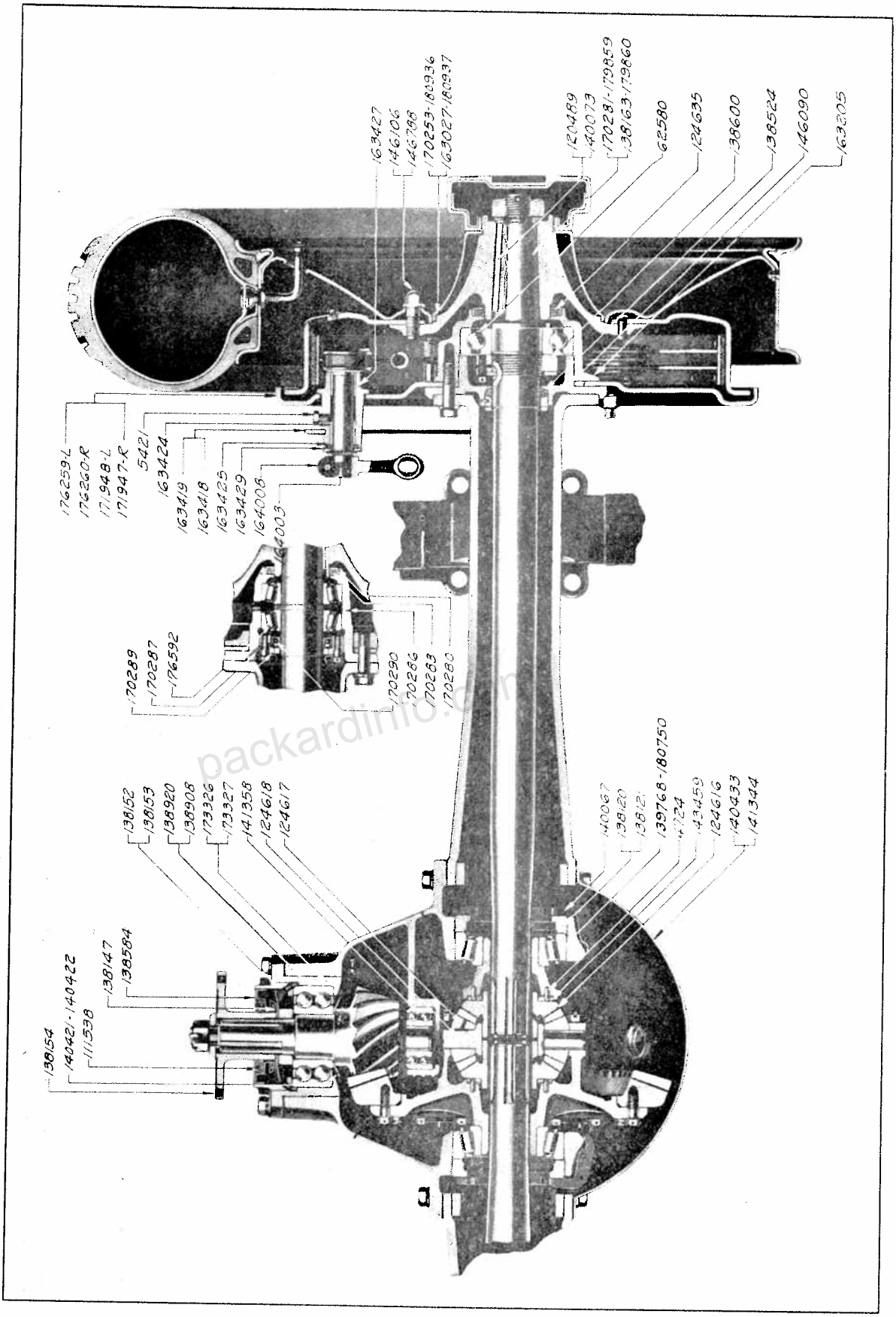

packardinfo.com

726-733-740-745
826-833-840-845

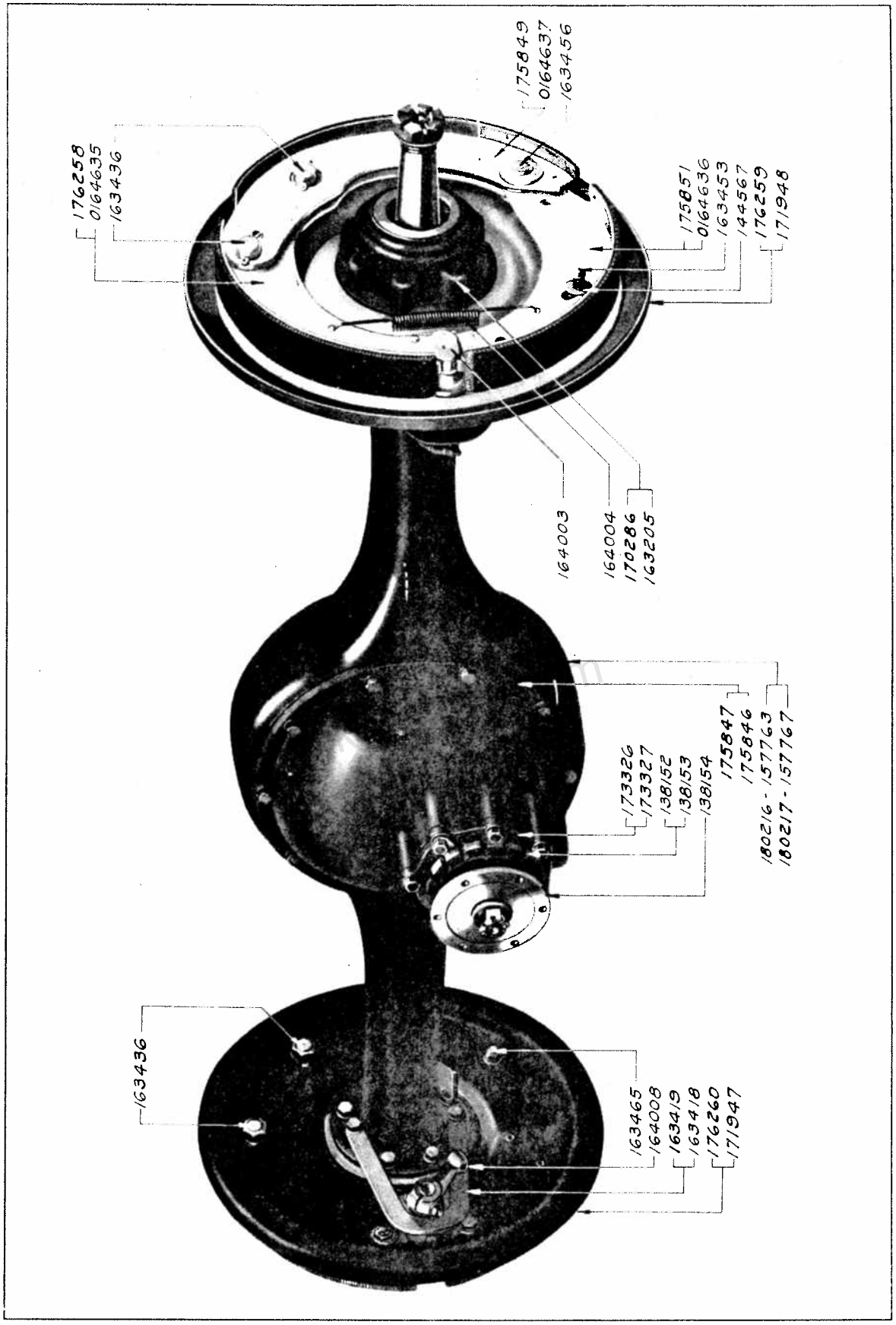

Printed in U. S. A.

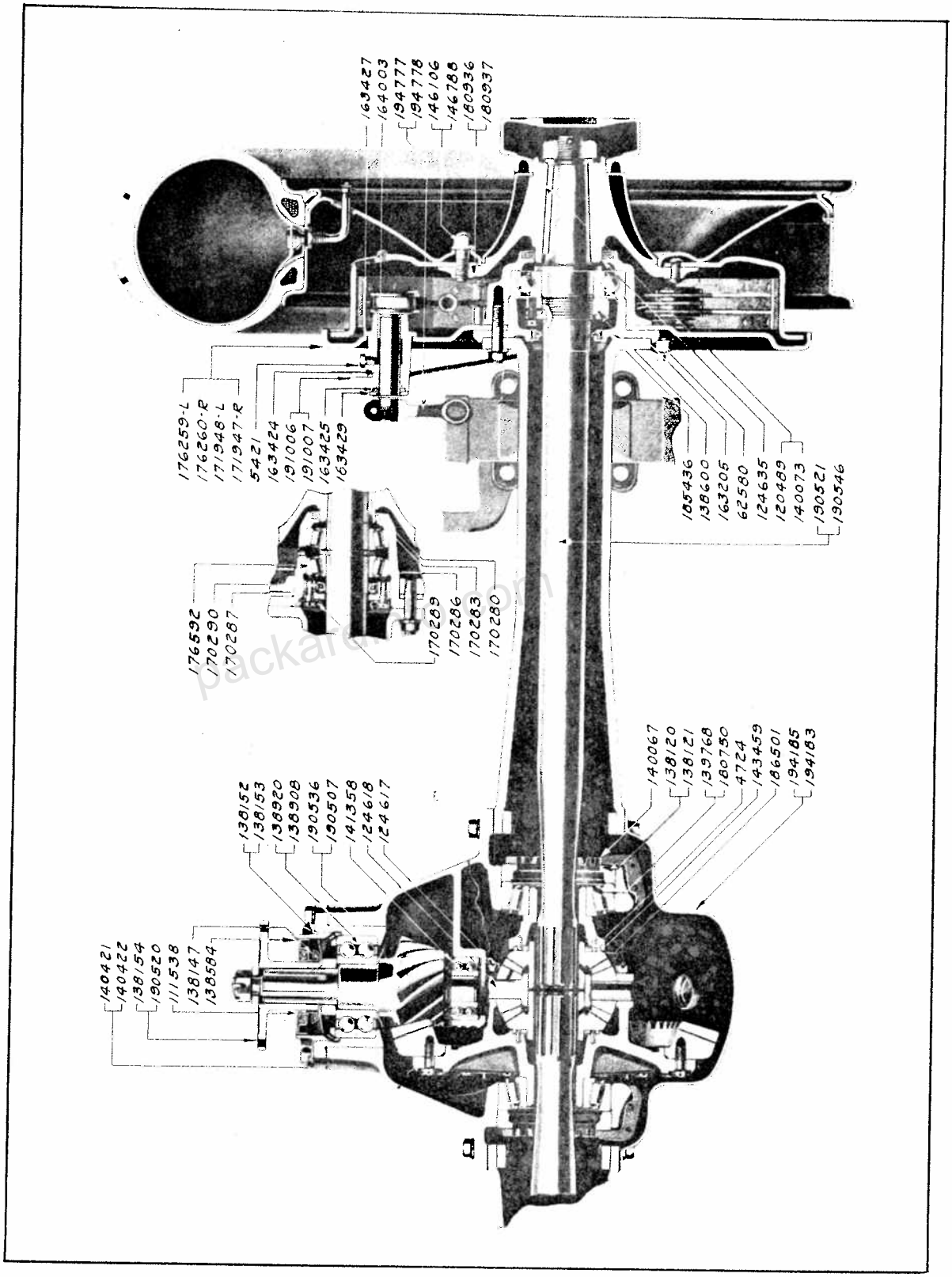
63427
64003
194777
194778
146106
146788
180936
180937
176259-L
176260-R
171948-L
171947-R
5421
63424
191006
191007
163425
163429
185436
138600
163205
62580
124635
120489
140073
190521
190546
176592
170290
170287
170289
170286
170283
170280
140067
138120
138121
139768
180750
4724
143459
186501
194185
194183
138152
138153
138920
138908
190536
190507
141358
124618
124617
140421
140422
138154
190520
111538
138147
138584

packardinfo.com

REAR AXLE SPRING

Piece No.	Name	No. Required 726 733	740 745	826 833	840 845	901 902	903 904
157986	Rear axle spring block—right	1	1	..	..	..	..
183970	Rear axle spring block—right	..	..	1	1	..	..
186696	Rear axle spring block—right	..	..	..	..	1	1
157985	Rear axle spring block—left	1	1	..	..	..	..
183963	Rear axle spring block—left	..	..	1	1	..	..
186697	Rear axle spring block—left	..	..	..	..	1	1
176716	Rear axle spring bolt—front	2	2	..	..	..	..
180340	Rear axle spring bolt—front	..	..	2	2	2	2
113860	Rear axle spring bolt front nut ($\frac{3}{4}$" plain special)	2	2	..	..	..	..
7009	Rear axle spring bolt front nut ($\frac{9}{16}$"—18)	..	..	2	2	2	2
132012	Rear axle spring bolt front nut ($\frac{3}{4}$" castle)	2	2	..	..	..	..
5807	Lockwasher ($\frac{9}{16}$")	..	..	2	2	2	2
4320	Cotter pin ($\frac{5}{32}$ x 1 $\frac{1}{8}$")	2	2	..	..	..	..
180550	Rear axle spring bolt front washer	..	..	2	2	2	2
180770	Rear axle spring bolt front spring washer—inner	..	..	2	2	..	..
194578	Rear axle spring bolt front spring washer—inner	..	..	..	..	2	2
180802	Rear axle spring bolt front spring washer—outer	..	..	2	2	..	..
194579	Rear axle spring bolt front spring washer—outer	..	..	..	..	2	2
132011	Rear axle spring bolt—rear	2	2	..	..	..	..
180801	Rear axle spring bolt—rear	..	..	2	2	2	2
132012	Rear axle spring bolt—rear nut	2	2	..	..	..	..
7009	Rear axle spring bolt—rear nut ($\frac{9}{16}$"—18)	..	..	2	2	2	2
4320	Cotter pin ($\frac{5}{32}$ x 1 $\frac{1}{8}$")	2	2	..	..	..	..
5807	Lockwasher ($\frac{9}{16}$")	..	..	2	2	2	2
180550	Rear axle spring bolt rear washer	..	..	2	2	2	2
180770	Rear axle spring bolt rear spring washer—inner	..	..	2	2	..	..
194578	Rear axle spring bolt rear spring washer—inner	..	..	..	..	2	2
180802	Rear axle spring bolt rear spring washer—outer	..	..	2	2	..	..
194579	Rear axle spring bolt rear spring washer—outer	..	..	..	..	2	2
145711	Rear axle spring bracket—front	2	2	..	..	..	..
191325	Rear axle spring bracket—front right	..	..	..	..	1	1
180775	Rear axle spring bracket—front	..	..	2	2	..	..
191324	Rear axle spring bracket—front left	..	..	..	..	1	1
64383	Rear axle spring bushing	4	4	..	..	..	..
185435	Rear axle spring bushing	..	..	4	4	4	4
23731	Rear axle spring center bolt and nut	..	2	2	2	2	2
138551	Rear axle spring clip	4	4	..	..	..	..
179157	Rear axle spring clip	..	..	4	4	4	4
62455	Spring clip nut	8	8	8	8	8	8
5514	Lockwasher ($\frac{5}{8}$")	..	..	8	8	8	8
175056	Rear axle spring and cover assembly (2 $\frac{1}{4}$ x 56" x 1000 lbs. x 145 rate) (used on body models 401-402-431)	2	..	..	..	..	..
175058	Rear axle spring and cover assembly (2 $\frac{1}{4}$ x 56" x 1100 lbs. x 145 rate) (used on body models 407-408-409-411-412-441)	2	2	..	..	..	..
175060	Rear axle spring and cover assembly (2 $\frac{1}{4}$ x 56" x 1200 lbs. x 145 rate) (used on body models 403-406-417-418-419)	2	2	..	..	..	..
175062	Rear axle spring and cover assembly (2 $\frac{1}{4}$ x 56" x 1300 lbs. x 145 rate) (used on body models 416-413-404-405)	2	2	..	..	..	..
175064	Rear axle spring and cover assembly (2 $\frac{1}{4}$ x 56" x 1000 lbs. x 165 rate) (used on body model 400)	2	..	..	..	..	..
175066	Rear axle spring and cover assembly (2 $\frac{1}{4}$ x 56" x 1200 lbs. x 165 rate) (used on body model 410)	..	2	..	..	..	..
175948	Rear axle spring and cover assembly (2 $\frac{1}{4}$ x 56" x 1400 lbs. x 145 rate) (used on body models 414-415)	..	2	..	..	..	..
175072	Rear axle spring and cover assembly (2 $\frac{1}{4}$ x 62" x 1200 lbs. x 145 rate) (used on body models 421-427-428-451-439-429)	..	2	..	..	..	..
175074	Rear axle spring and cover assembly (2 $\frac{1}{4}$ x 62" x 1100 lbs. x 145 rate) (used on body model 422)	..	2	..	..	..	..
175952	Rear axle spring and cover assembly (2 $\frac{1}{4}$ x 62" x 1300 lbs. x 145 rate) (used on body models 426-423)	..	2	..	..	..	..

packardpro.com

SPRING COVER CHART

Spring and Cover Number	Front Half of Spring						Rear Half of Spring					
	Canvas	"A" Spring Cover	"B" Spring Cover	"C" Spring Cover	"D" Spring Cover	"E" Spring Cover	Canvas	"F" Spring Cover	"G" Spring Cover	"H" Spring Cover	"I" Spring Cover	"J" Spring Cover
175056	175043	175009	175014	175013	175012	175011	175044	175009	175018	175019	175020	175011
175058	175043	175009	175014	175013	175012	175011	175044	175009	175018	175019	175020	175011
175060	175043	175007	175014	175013	175012	175011	175044	175007	175018	175019	175020	175011
175062	175043	175007	175014	175013	175012	175011	175044	175007	175018	175019	175020	175011
175064	175043	175008	175017	175016	175015	175011	175044	175008	175021	175022	175023	175011
175066	175043	175008	175017	175016	175015	175011	175044	175008	175021	175022	175023	175011
175948	175043	175008	175037	175016	175015	175011	175044	175008	175034	175035	175036	175011
175072	175045	175031	175021	175022	175023	175011	175046	175031	175027	175028	175029	175011
175074	175045	175031	175021	175022	175023	175011	175046	175031	175027	175028	175029	175011
175952	175045	175032	175038	175025	175026	175011	175046	175032	175030	175028	175029	175011
175950	175045	175032	175038	175025	175026	175011	175046	175032	175030	175028	175029	175011
175080	175045	175010	175024	175025	175026	175011	175046	175010	175030	175028	175029	175011
176736	175044	177906	177905	177904	177903	177902	175046	177907	177908	177909	177910	177911
176738	175044	177906	177905	177904	177903	177902	175046	177907	177908	177909	177910	177911
176740	175044	177916	177915	177914	177913	177912	175046	177917	177918	177919	177920	177921
176742	175044	177916	177915	177914	177913	177912	175046	177917	177918	177919	177920	177921
176732	175043	177888	177887	177886		177885	175044	177889	177890	177891	177892	177893
176734	175043	177888	177887	177886		177885	175044	177889	177890	177891	177892	177893
176726	175043	177897	177896	177895		177894	175044	177898	177899	177900	177901	177893
176728	175043	177897	177896	177895		177894	175044	177898	177899	177900	177901	177893
176730	175043	177897	177896	177895		177894	175044	177898	177899	177900	177901	177893
175068	175043	175008	175017	175016	175015	175011	175044	175008	175021	175022	175023	175011
175070	175043	175008	175017	175016	175015	175011	175044	175008	175021	175022	175023	175011
175078	175045	175010	175024	175025	175026	175011	175046	175010	175030	175028	175029	175011
180382	180358	180411	180413	180414	180415	180416	180358	180411	180413	180414	180415	180416
180384	180358	180411	180413	180414	180415	180416	180358	180411	180413	180414	180415	180416
180386	180358	180411	180413	180414	180415	180416	180358	180411	180413	180414	180415	180416
180388	180358	180412	180413	180414	180415	180416	180358	180412	180413	180414	180415	180416
180390	180358	180412	180413	180414	180415	180416	180358	180412	180413	180414	180415	180416
180392	180358	180411	180413	180414	180415	180416	180358	180411	180413	180414	180415	180416
180394	180358	180411	180413	180414	180415	180416	180358	180411	180413	180414	180415	180416
180396	180358	180411	180413	180414	180415	180416	180358	180411	180413	180414	180415	180416
180398	180358	180411	180413	180414	180415	180416	180358	180411	180413	180414	180415	180416
97862	175045	175010	175024	175025	175026	175011	175046	175010	175030	175028	175029	175011
186029	180358	180412	180413	180414	180415	180416	180358	180412	180413	180414	180415	180416
186030	180358	180412	180413	180414	180415	180416	180358	180412	180413	180414	180415	180416
180372	180358	180411	180413	180414	180415	180416	180358	180411	180413	180414	180415	180416
180374	180358	180411	180413	180414	180415	180416	180358	180411	180413	180414	180415	180416
180376	180358	180411	180413	180414	180415	180416	180358	180411	180413	180414	180415	180416
180378	180358	180411	180413	180414	180415	180416	180358	180411	180413	180414	180415	180416
180380	180358	180411	180413	180414	180415	180416	180358	180411	180413	180414	180415	180416
194714	180358	180411	180413	180414	180415	180416	180358	180411	180413	180414	180415	180416

Printed in U. S. A.

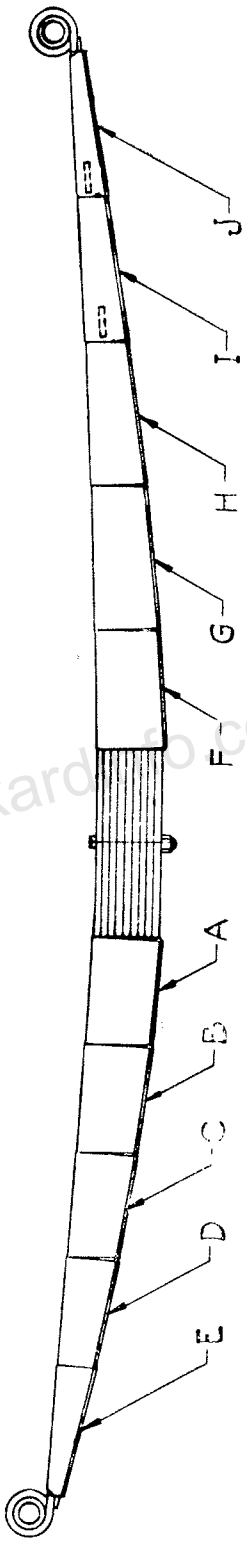

packard-to.com

Piece No.	Name	No. Required 726 733	740 745	826 833	840 845	901 902	903 904
175950	Rear axle spring and cover assembly (2¼ x 62" x 1400 lbs. x 145 rate) (used on body models 424-425)	..	2	..	..	..	..
175080	Rear axle spring and cover assembly (2¼ x 62" x 1200 lbs. x 165 rate) (used on body model 420)	..	2	..	..	..	..
176726	Rear axle spring and cover assembly (2¼ x 56" x 1000 lbs. x 120 rate) (body models 401-2-431)	2	..	..	..	..	..
176728	Rear axle spring and cover assembly (2¼ x 56" x 1100 lbs. x 120 rate) (body models 407-8-9-411-12-441)	2	2	..	..	..	..
176730	Rear axle spring and cover assembly (2¼ x 56" x 1200 lbs. x 120 rate) (body models 403-6-417-18-19)	2	2	..	..	..	..
176742	Rear axle spring and cover assembly (2¼ x 62" x 1400 lbs. x 120 rate) (body models 424-25)	..	2	..	..	..	..
176732	Rear axle spring and cover assembly (2¼ x 56" x 1300 lbs. x 120 rate) (body models 404-5-413-16)	2	2	..	..	..	..
176734	Rear axle spring and cover assembly (2¼ x 56" x 1400 lbs. x 120 rate) (body models 414-15)	..	2	..	..	..	..
176736	Rear axle spring and cover assembly (2¼ x 62" x 1100 lbs. x 120 rate) (body model 422)	..	2	..	..	..	..
176738	Rear axle spring and cover assembly (2¼ x 62" x 1200 lbs. x 120 rate) (body models 421-27-28-29-451-439)	..	2	..	..	..	..
176740	Rear axle spring and cover assembly (2¼ x 62" x 1300 lbs. x 120 rate) (body models 423-426)	..	2	..	..	..	..
175070	Rear axle spring and cover assembly (2¼ x 56" x 1400 lbs. x 165 rate) (body models 424-415) (special)	..	2	..	..	..	..
175078	Rear axle spring and cover assembly (2¼ x 62" x 1400 lbs. x 165 rate) (body models 424-425) (special)	..	2	..	..	..	..
175080	Rear axle spring and cover assembly (2¼ x 62" x 1200 lbs. x 165 rate) (body model 426) (special)	..	2	..	..	..	..
175068	Rear axle spring and cover assembly (2¼ x 56" x 1300 lbs. x 165 rate) (body models 404-405) (special)	2	..	..	..	..	..
180382	Rear axle spring and cover assembly (2½ x 60½" x 1000 lbs. x 145 rate) (use on models 461-2-481-501-521)	..	..	2	..	2	..
180384	Rear axle spring and cover assembly (2½ x 60½" x 1100 lbs. x 145 rate) (use with body models 467-8-9-471-2-491-483-507-8-9-511-523-527-531) (used on custom bodies 3004-8-9 for 833)	..	..	2	2	2	2
180386	Rear axle spring and cover assembly (2½ x 60½" x 1200 lbs. x 145 rate) (use on body models 463-6-477-8-9-493-503-6-517-18-19-533-537-543) (used on custom bodies 3000-1-2-3 for 833) (used on custom bodies 3004-8-9 for 840)	..	..	2	2	2	2
180388	Rear axle spring and cover assembly (2½ x 60½" x 1300 lbs. x 145 rate) (use on body models 464-465-473-6-504-5-513-516) (used on custom bodies 3000-1-2-3 for 840)	..	..	2	2	2	2
180392	Rear axle spring and cover assembly (2½ x 60½" x 1000 lbs. x 165 rate) (used on body models 460-500)	..	..	2	..	2	..
180394	Rear axle spring and cover assembly (2½ x 60½" x 1200 lbs. x 165 rate) (use on body models 470-510)	..	..	..	2	..	2
180390	Rear axle spring and cover assembly (2½ x 60½" x 1400 lbs. x 145 rate) (use on body models 474-475-514-515)	..	..	..	2	..	2
97862	Rear axle spring and cover assembly (2¼ x 62" x 1500 lbs. x 175 rate) (use on 745)	..	2	..	..	..	..
186029	Rear axle spring and cover assembly (2¼ x 60½" x 1300 lbs. x 185 rate)	..	..	2	2	2	2
186030	Rear axle spring and cover assembly (2¼ x 60½" x 1400 lbs. x 185 rate)	..	..	2	2	2	2
180372	Rear axle spring and cover assembly (2½ x 60½" x 1000 lbs. x 120 rate)	..	..	2	2	2	2
180374	Rear axle spring and cover assembly (2½ x 60½" x 1100 lbs. x 120 rate)	..	..	2	2	2	2
180376	Rear axle spring and cover assembly (2½ x 60½" x 1200 lbs. x 120 rate)	..	..	2	2	2	2
180378	Rear axle spring and cover assembly (2½ x 60½" x 1300 lbs. x 120 rate)	..	..	2	2	2	2
180380	Rear axle spring and cover assembly (2½ x 60½" x 1400 lbs. x 120 rate)	..	..	2	2	2	2
180396	Rear axle spring and cover assembly (2½ x 60½" x 1300 lbs. x 165 rate)	..	..	2	2	2	2
180398	Rear axle spring and cover assembly (2½ x 60½" x 1400 lbs. x 165 rate)	..	..	2	2	2	2

NOTE: See chart for rear spring covers

175043	Rear axle spring cover canvas—front (used on 726-733-740)	2	2	..	..	..	..
175045	Rear axle spring cover canvas—front (used on 745)	..	2	..	..	..	..

packardinfo.com

Piece No.	Name	No. Required 726 733	740 745	826 833	840 845	901 902	903 904
175044	Rear axle spring cover canvas—rear (used on 726-733-740)	2	2	..	..	..	..
175046	Rear axle spring cover canvas—rear (used on 745)	..	2	..	..	..	..
180358	Rear axle spring cover canvas	..	..	4	4	4	4
195942	Rear axle spring main leaf	..	..	2	2	2	2
97993	Rear axle spring main leaf—62" long	..	2	..	..	..	..
135913	Rear axle spring rubber bumper	2	2	2	2	..	..
186242	Rear axle spring rubber bumper	..	..	..	..	2	2
135911	Rear axle spring rubber bumper bracket	2	2	2	2	..	..
186243	Rear axle spring rubber bumper bracket	..	..	..	..	2	2
7841	Screw (3/8"—24 x 1 1/4" hex. hd.)	4	4	4	4	..	..
7822	Screw (3/8"— 24 x 1 1/2" hex. hd.)	..	..	..	..	4	4
5506	Lockwasher (3/8")	4	4	4	4	4	4
7006	Nut (3/8"—24 plain)	4	4	4	4	4	4
132011	Rear axle spring shackle bolt	2	2	..	..	..	..
180801	Rear axle spring shackle bolt	..	..	2	2	2	2
132012	Rear axle spring shackle bolt nut	2	2	..	..	..	..
7009	Rear axle spring shackle bolt nut (9/16"—18)	..	..	2	2	2	2
4320	Cotter pin (5/32 x 1 1/8")	2	2	..	..	..	..
5807	Lockwasher (9/16")	..	..	2	2	2	2
180550	Rear axle spring shackle bolt washer	..	..	2	2	2	2
180770	Rear axle spring shackle bolt spring washer—inner	..	..	2	2	..	..
194578	Rear axle spring shackle bolt spring washer—inner	..	..	..	..	2	2
180802	Rear axle spring shackle bolt spring washer—outer	..	..	2	2	..	..
194579	Rear axle spring shackle bolt spring washer—outer	..	..	..	..	2	2
170120	Rear axle spring shackle bracket—left (used on 726-733-740)	1	1	..	..	..	..
186115	Rear axle spring shackle bracket assembly—left	..	..	1	1	..	..
158198	Rear axle spring shackle bracket—left (used on 745)	..	1	..	..	..	..
170121	Rear axle spring shackle bracket—right (used on 726-733-740)	1	1	..	..	..	..
186114	Rear axle spring shackle bracket assembly—right	..	..	1	1	..	..
158199	Rear axle spring shackle bracket—right (used on 745)	..	1	..	..	..	..
194432	Rear axle spring shackle bracket assembly—right (901)	..	..	..	..	1	..
194433	Rear axle spring shackle bracket assembly—right (902-903)	..	..	..	..	1	1
194434	Rear axle spring shackle bracket assembly—right (904)	..	..	..	..	..	1
194435	Rear axle spring shackle bracket assembly—left (901)	..	..	..	..	1	..
194436	Rear axle spring shackle bracket assembly—left (902-903)	..	..	..	..	1	1
194437	Rear axle spring shackle bracket assembly—left (904)	..	..	..	..	..	1
135950	Rear axle spring shackle bracket bushing (used on 726-733-740)	2	2	..	..	..	..
158375	Rear axle spring shackle bracket bushing (used on 745)	..	2	..	..	..	..
180585	Rear axle spring shackle bracket bushing	..	..	2	2	2	2
143449	Rear axle spring shackle bracket rivet—long (used on 726-733-740)	2	2	..	..	..	..
184708	Rear axle spring shackle bracket rivet—long	..	..	2	2	..	..
180913	Rear axle spring shackle link—outer	2	2	2	2	2	2
180799	Rear axle spring shackle link—inner	2	2	2	2	2	2
139245	Rear axle spring shackle link—stop pin	2	2	..	..	..	..
180798	Rear axle spring shackle link—stop pin	..	..	2	2	2	2
7006	Nut (3/8"—24 plain)	2	2	2	2	2	2
5506	Lockwasher (3/8")	2	2	2	2	2	2
184810	Rear axle spring shackle link oil restriction	..	..	2	2	..	..

RUNNING BOARD LAMP

181220	Running board lamp	..	..	..	2	..	..
194669	Running board lamp	..	..	..	..	..	2
102590	Running board lamp bulb	..	..	..	2	..	2
163484	Running board lamp cable connector	..	..	..	4	..	3
143442	Running board lamp cable connector insulator	..	..	..	2	..	1
181221	Running board lamp conduit	..	..	..	2	..	..
194668	Running board lamp conduit	..	..	..	..	..	2
36111	Running board lamp cable conduit insulator	..	..	..	..	..	2
183072	Running board lamp cable connector insulator	..	..	..	6	..	5
185063	Running board lamp socket assembly	..	..	..	2	..	2
185064	Running board lamp glass and rim assembly	..	..	..	2	..	2
185065	Running board lamp to splasher screw	..	..	..	8	..	8
185031	Running board lamp switch	..	..	..	2	..	2

SHOCK ABSORBER

Piece No.	Name	No. Required 726 733	740 745	826 833	840 845	901 902	903 904
97748	Shock absorber tank equipment	1	1	..	..	..	..
179310	Shock absorber assembly—front left	1	1	..	..	..	..
179311	Shock absorber assembly—front right	1	1	..	..	..	..
179845	Shock absorber assembly—rear right	1	1	..	..	..	..
179846	Shock absorber assembly—rear left	1	1	..	..	..	..
164063	Shock absorber to front axle screw ($\frac{7}{16}$—28 x 4$\frac{1}{4}$" hex. hd.)	2	2	..	..	..	..
5562	Shock absorber to front axle screw ($\frac{7}{16}$—20 x 4$\frac{1}{4}$")	2	2	..	..	..	..
7007	Nut ($\frac{7}{16}$"—20 plain)	4	4	..	..	..	..
5508	Lockwasher ($\frac{7}{16}$")	4	4	..	..	..	..
164062	Shock absorber to rear axle fastening screw ($\frac{7}{16}$—20 x 1$\frac{7}{8}$" hex. hd. special)	2	2	..	..	..	..
5561	Shock absorber to rear axle fastening screw	2	2	..	..	..	..
5508	Lockwasher ($\frac{7}{16}$")	4	4	..	..	..	..
158057	Shock absorber (front) connecting link assembly	2	2	..	..	..	..
7108	Shock absorber front connecting link ball lower nut ($\frac{1}{2}$"—20 castle)	2	2	..	..	..	..
7108	Ball upper nut ($\frac{1}{2}$"—20 castle)	2	2	..	..	..	..
4291	Ball lower cotter pin ($\frac{3}{32}$ x $\frac{3}{4}$")	2	2	..	..	..	..
4291	Ball upper cotter pin ($\frac{3}{32}$ x $\frac{3}{4}$")	2	2	..	..	..	..
158059	Shock absorber (rear) connecting link assembly	2	2	..	..	..	..
7108	Shock absorber (rear) connecting link ball lower nut ($\frac{1}{2}$"—20 castle)	2	2	..	..	..	..
7008	Ball upper nut ($\frac{1}{2}$"—20 plain)	2	2	..	..	..	..
5510	Ball upper lockwasher ($\frac{1}{2}$")	2	2	..	..	..	..
4291	Ball lower cotter pin ($\frac{3}{32}$ x $\frac{3}{4}$")	2	2	..	..	..	..
162059	Shock absorber connecting link anti-rattler	2	2	..	..	..	..
157983	Shock absorber connecting link ball upper bracket	2	2	..	..	..	..
158021	Shock absorber connecting link ball dust shield	8	8	..	..	..	..
5673	Shock absorber (rear) connecting link ball upper lockwasher ($\frac{1}{2}$")	2	2	..	..	..	..
176842	Shock absorber connecting link ball oil wick	8	8	..	..	..	..
178768	Shock absorber housing filler screw assembly	4	4	..	..	..	..
78945	Shock absorber housing filler screw gasket	4	4	..	..	..	..
174645	Shock absorber front lever—left	1	1	..	..	..	..
174646	Shock absorber front lever—right	1	1	..	..	..	..
175501	Shock absorber lever—rear	2	2	..	..	..	..
158003	Shock absorber lever nut	4	4	..	..	..	..
5518	Shock absorber lever nut lockwasher	4	4	..	..	..	..
170176	Shock absorber metering valve adjuster	4	4	..	..	..	..
170179	Lock nut	4	4	..	..	..	..
170177	Shock absorber front metering valve and ball assembly	2	2	..	..	..	..
179847	Shock absorber rear metering valve and ball assembly	2	2	..	..	..	..
184306	Shock absorber metering valve and ball assembly (spring loaded)	2	2	..	..	..	..
5690	Shock absorber metering valve gasket ($\frac{21}{32}$ x $\frac{7}{16}$ x $\frac{3}{32}$" annular)	4	4	..	..	..	..
179531	Shock absorber metering valve gasket ($\frac{21}{32}$ x $\frac{7}{16}$ x .040" annular)	4	4	..	..	..	..
158002	Shock absorber shaft packing	4	4	..	..	..	..
158013	Shock absorber shaft packing nut	4	4	..	..	..	..
164061	Shock absorber shaft packing nut lock	4	4	..	..	..	..
5569	Screw No. 10—(32 x $\frac{1}{2}$" fill. hd.)	4	4	..	..	..	..
5500	Lockwasher ($\frac{3}{16}$")	4	4	..	..	..	..

SHOCK ABSORBER

185011	Shock absorber assembly—front left	..	..	1	1	..	..
185012	Shock absorber assembly—front right	..	..	1	1	..	..
184324	Shock absorber assembly—rear right	..	..	1	1	..	..
184323	Shock absorber assembly—rear left	..	..	1	1	..	..
5849	Shock absorber to frame bolt—front	..	..	4	4	..	..
5842	Shock absorber to frame bolt—rear	..	..	4	4	..	..
5512	Lockwasher ($\frac{9}{16}$" std.)	..	..	8	8	..	..
7009	Nut ($\frac{9}{16}$"—18 S. A. E.)	..	..	8	8	..	..
185173	Shock absorber link bearing	..	..	16	16	..	..

packardinfo.com

Piece No.	Name	No. Required					
		726 733	740 745	826 833	840 845	901 902	903 904
185182	Shock absorber cam bushing	-	-	4	4	-	-
185183	Shock absorber cover plate	-	-	4	4	-	-
185184	Shock absorber cover plate gasket	-	-	4	4	-	
185187	Shock absorber cover plate screw	-	-	12	12	-	-
185188	Shock absorber housing oil plug	-	-	4	4	-	-
185189	Shock absorber housing oil plug gasket	-	-	4	4	-	-
184309	Shock absorber frame plate	-	-	4	4	-	-
184306	Shock absorber front axle bracket	-	-	2	2	-	-
5282	Shock absorber front axle bracket screw	-	-	4	4	-	-
5508	Lockwasher 7/16" std.	-	-	4	4	-	-
7007	Nut 7/16-20 plain	-	-	4	4	-	-
98082	Shock absorber link assembly-front	-	-	2	2	-	-
98084	Shock absorber link assembly-rear	-	-	2	2	-	-
114955	Lubricator conn. (Alemite "A" male)	-	-	4	4	-	-
116272	Lubricator conn. dust cap (Alemite)	-	-	4	4	-	-
7008	Shock absorber front link ball nut	-	-	4	4	-	-
5510	Shock absorber front link ball lockwasher	-	-	4	4	-	-
185366	Shock absorber front link felt washer	-	-	4	4	-	-
184566	Shock absorber front link felt washer retainer	-	-	4	4	-	-
185192	Shock absorber link ball socket plug	-	-	8	8	-	-
185193	Shock absorber link ball spring	-	-	8	8	-	-
185190	Shock absorber link ball stud	-	-	8	8	-	-
185366	Shock absorber link oil retainer	-	-	4	4	-	-
185367	Shock absorber link oil retainer cover	-	-	4	4	-	-
185176	Shock absorber piston	-	-	4	4	-	-
185174	Shock absorber piston cylinder nut	-	-	4	4	-	-
185175	Shock absorber piston cylinder nut gasket	-	-	4	4	-	-
185177	Shock absorber piston intake valve	-	-	4	4	-	-
185178	Shock absorber piston intake valve spring	-	-	4	4	-	-
185179	Shock absorber piston link	-	-	4	4	-	-
185181	Shock absorber piston link pin	-	-	4	4	-	-
185180	Shock absorber piston link spring	-	-	4	4	-	-
185186	Shock absorber relief valve gasket	-	-	8	8	-	-
185185	Shock absorber relief valve nut	-	-	8	8	-	-
205912	Shock absorber relief valve plug gasket	-	-	8	8	-	-

SHOCK ABSORBER

191257	Shock absorber assembly-front left	-	-	-	-	1	1
191256	Shock absorber assembly-front right	-	-	-	-	1	1
191259	Shock absorber assembly-rear left	-	-	-	-	1	-
194238	Shock absorber assembly-rear left	-	-	-	-	-	1
191258	Shock absorber assembly-rear right	-	-	-	-	1	-
194237	Shock absorber assembly-rear right	-	-	-	-	-	1
184308	Shock absorber front axle bracket	-	-	-	-	2	2
5849	Shock absorber to frame bolt-front	-	-	-	-	4	4
185182	Shock absorber cambushing	-	-	-	-	4	4
194036	Shock absorber control connecting rod-front (supersedes No. 191832)	-	-	-	-	2	-
194037	Shock absorber control connecting rod-front (903 only) - (supersedes No. 191833)	-	-	-	-	-	2
194050	Shock absorber control connecting rod-front (904 only) - (supersedes No. 191834)	-	-	-	-	-	2
114775	Ball joint	-	-	-	-	2	2
7513	Yoke end 3/16"	-	-	-	-	2	2
7003	Nut 3/16"	-	-	-	-	6	6
7523	Yoke end pin	-	-	-	-	2	2
190192	Yoke end pin spring washer	-	-	-	-	2	2
4690	Cotter pin 1/16 x 3/8"	-	-	-	-	2	2
5500	Lockwasher 3/16"	-	-	-	-	2	2
191835	Shock absorber control connecting rod-rear (901 only)	-	-	-	-	2	-
191988	Shock absorber control connecting rod-rear (902 only)	-	-	-	-	2	-
191992	Shock absorber control connecting rod-rear	-	-	-	-	-	2
114775	Ball joint	-	-	-	-	2	2
7513	Yoke end 3/16"	-	-	-	-	2	2
7523	Yoke end pin 3/16"	-	-	-	-	2	2
190192	Yoke end pin spring washer	-	-	-	-	2	2
4690	Cotter pin 1/16 x 3/8"	-	-	-	-	2	2

packardinfo.com

Piece No.	Name	No. Required 726 733	740 745	826 833	840 845	901 902	903 904
7003	Nut 3/16"	–	–	–	–	6	6
5500	Lockwasher 3/16"	–	–	–	–	2	2
191829	Shock absorber control connecting rod bushing	–	–	–	–	10	10
194054	Shock absorber control connecting rod to cross member bracket and bushing assembly	–	–	–	–	2	2
7801	Screw 1/4-28 x 1/2" hex. hd.	–	–	–	–	2	2
7004	Nut 1/4-28	–	–	–	–	2	2
5502	Lockwasher 1/4"	–	–	–	–	2	2
194045	Shock absorber control connecting rod and frame bracket and bushing assembly	–	–	–	–	2	2
7706	Shock absorber control connecting rod to frame bracket screw No. 10-32 x 1/2" fill. hd. mach.	–	–	–	–	4	4
5500	Lockwasher 3/16"	–	–	–	–	4	4
7003	Nut 3/16"	–	–	–	–	4	4
191283	Shock absorber control connecting rod link boss	–	–	–	–	1	1
194046	Shock absorber control connecting rod to rear motor support bracket and bushing assembly	–	–	–	–	2	2
194053	Shock absorber control connecting rod to spring bracket-- bracket and bushing assembly	–	–	–	–	2	2
7801	Screw 1/4-28 x 1/2" hex. hd.	–	–	–	–	2	2
5502	Lockwasher 1/4"	–	–	–	–	2	2
191243	Shock absorber control lever bracket and shaft assembly	–	–	–	–	1	1
191287	Shock absorber control lever	–	–	–	–	1	1
8201	Shock absorber control lever bracket screw 1/4-28 x 5/8" c'sunk hd. mach.	–	–	–	–	2	2
5502	Lockwasher 1/4" std.	–	–	–	–	2	2
7004	Nut 1/4-28	–	–	–	–	2	2
190592	Shock absorber control lever connecting link	–	–	–	–	1	1
7824	Yoke end pin 1/4"	–	–	–	–	1	1
194732	Yoke end pin spring washer	–	–	–	–	2	2
4280	Cotter pin 1/16 x 1/2"	–	–	–	–	2	2
186436	Shock absorber control lever spring washer	–	–	–	–	2	2
4290	Cotter pin 3/32 x 5/8"	–	–	–	–	1	1
191990	Shock absorber control rocker shaft	–	–	–	–	–	1
191999	Shock absorber control rocker shaft	–	–	–	–	1	–
194060	Shock absorber control rocker shaft bracket and bushing assembly-left	–	–	–	–	1	1
194061	Shock absorber control rocker shaft bracket and bushing assembly-right	–	–	–	–	1	1
7827	Shock absorber control rocker shaft bracket screw	–	–	–	–	4	4
5504	Lockwasher 1/4"	–	–	–	–	4	4
7004	Nut 1/4-28	–	–	–	–	4	4
191991	Shock absorber control rocker shaft bushing	–	–	–	–	2	2
191996	Shock absorber control rocker shaft lever	–	–	–	–	2	2
4034	Taper pin	–	–	–	–	2	2
191994	Shock absorber control rocker shaft washer-plain	–	–	–	–	2	2
191995	Shock absorber control rocker shaft washer-spring	–	–	–	–	1	1
4305	Cotter pin 1/8 x 7/8"	–	–	–	–	1	1
205694	Shock absorber control valve and lever assem.-right front	–	–	–	–	1	1
205695	Shock absorber control valve and lever assem.-left front	–	–	–	–	1	1
205696	Shock absorber control valve and lever assem.-right front	–	–	–	–	–	1
205697	Shock absorber control valve and lever assem.-left-rear	–	–	–	–	–	1
205796	Shock absorber control valve and lever assem.-left-rear	–	–	–	–	1	–
205795	Shock absorber control valve and lever assem.-right-rear	–	–	–	–	1	–
5842	Shock absorber to frame bolt rear	–	–	–	–	4	4
5512	Lockwasher 9/16"	–	–	–	–	8	8
7009	Nut 9/16-18	–	–	–	–	4	4
184309	Shock absorber frame reinforcement-rear	–	–	–	–	2	2
191490	Shock absorber frame reinforcement-front	–	–	–	–	2	2
8214	Screw 1/4-28 x 3/4" flat hd.	–	–	–	–	2	2
5502	Lockwasher 1/4"	–	–	–	–	2	2
7004	Nut 1/4-28	–	–	–	–	2	2
184308	Shock absorber front axle bracket	–	–	–	–	4	4
5282	Shock absorber front axle bracket screw	–	–	–	–	4	4
5508	Lockwasher 7/16"	–	–	–	–	4	4
7007	Nut 7/16-20	–	–	–	–	4	4
185188	Shock absorber housing oil plug	–	–	–	–	4	4
185189	Shock absorber housing oil plug gasket	–	–	–	–	2	2
~~99683~~	Shock absorber link assembly-front 986-1						

Piece No.	Name	No. Required 726-733	740-745	826-833	840-845	901-902	903-904
207478	Shock absorber link assembly-rear	-	-	-	-	2	2
7008	Shock absorber link ball nut	-	-	-	-	8	8
5510	Shock absorber link ball lockwasher	-	-	-	-	8	8
185176	Shock absorber piston	-	-	-	-	4	4
185174	Shock absorber piston cylinder nut	-	-	-	-	4	4
185175	Shock absorber piston cylinder nut gasket	-	-	-	-	4	4
185177	Shock absorber piston intake valve	-	-	-	-	4	4
185178	Shock absorber piston intake valve spring	-	-	-	-	4	4
185179	Shock absorber piston link	-	-	-	-	4	4
185181	Shock absorber piston link pin	-	-	-	-	4	4
185180	Shock absorber piston link spring	-	-	-	-	4	4
185186	Shock absorber relief valve gasket	-	-	-	-	4	4
185185	Shock absorber relief valve nut	-	-	-	-	8	8
205912	Shock absorber relief valve plug gasket	-	-	-	-	8	8

SHOCK ABSORBER

RELIEF VALVES (For 826-833-840-845)

	Standard Symbol	Piece No.	Stiff Symbol	Piece No.	Soft Symbol	Piece No.	Extra Soft Symbol	Piece No.
Rebound-Front	3G	185166	2E	185167	3J	185165	3G	185166
Rebound-Rear	3J	185165	2G	185168	2G	185168	4J	185439
Compression-Front	G4	203814	G4	203814	G6	185171	C6	185441
Compression-Rear	G2	203811	G2	203811	G3	185172	G5	185440

RELIEF VALVES (For 901-902-903-904)

Rebound-Front	1C	Piece No. 213164	Compression-Front	G4	Piece No. 203814
Rebound-Rear	5G	Piece No. 213179	Compression-Rear	G2	Piece No. 203811

SPEEDOMETER

179203	Speedometer -North East- (miles per hour)	1	1	1	1	-	-
186744	Speedometer -North East- (miles per hour)	-	-	-	-	1	1
175959	Speedometer -North East- (kilometer)	1	1	1	1	-	-
191784	Speedometer -North East- (kilometer)	-	-	-	-	1	1
205829	Gasket (supersedes No.180048)	-	-	-	-	1	1
7906	Speedometer clamp screw 1/4-28 x 3/4" rnd. hd. mach.	1	1	1	1	-	-
5896	Speedometer clamp screw 1/4-28 x 13/16" fil. hd. mach.	-	-	-	-	2	2
178832	Speedometer driving shaft -North East-	1	1	1	1	-	-
190224	Speedometer driving shaft -North East-	-	-	-	-	1	1
124779	Clip (prior to frame to 293663 for 726-733 and 183960 for 740 and 183262 for 745)	1	1	-	-	-	-
129773	Clip (after frame No. 293662 for 726-733-183959 for 740 and 183261 for 745)	1	1	1	1	1	1
147406	Clip-special	-	-	-	-	1	1
5812	Screw No. 10-32 x 5/8" fill. hd.	-	-	-	-	1	1
5500	Lockwasher 3/16"	-	-	-	-	1	1
184961	Speedometer driving shaft cable -North East- (square upper end)	1	1	1	1	-	-
194440	Speedometer driving shaft cable	-	-	-	-	1	1
118970	Speedometer driven pinion and shaft (4.38 to 1 ratio) (22 teeth) (prior to frame No. 281649 for 733)	1	1	1	1	-	-
118970	Speedometer driven pinion and shaft (4.41 to 1 ratio) (22 teeth)	-	-	-	-	1	1
148440	Speedometer driven pinion and shaft (4.38 to 1 ratio) (21 teeth) (used on 733) (after frame No. 281648)	1	-	-	-	-	
137102	Speedometer driven pinion and shaft (4.69 to 1 ratio) (24 teeth) (prior to frame No. 281649 for 733)	1	-	-	-	1	-
175442	Speedometer driven pinion and shaft (4.69 to 1 ratio) (23 teeth) (used on 733) (after frame No. 281648)	1	-	-	-	-	1
137102	Speedometer driven pinion and shaft (5.08 to 1 ratio) (24 teeth)	1	-	-	-	-	-
184571	Speedometer driven pinion and shaft (5.08 to 1 ratio) (25 teeth)	-	1	1	1	-	-
184571	Speedometer driven pinion and shaft (5.07 to 1 ratio) (25 teeth)	-	-	-	-	1	1
121791	Speedometer driven pinion and shaft (4.07 to 1 ratio) (20 teeth)	-	1	-	1	-	-
121791	Speedometer driven pinion and shaft (4.06 to 1 ratio) (20 teeth)	-	-	-	-	-	1
175442	Speedometer driven pinion and shaft (4.69 to 1 ratio) (23 teeth)	-	1	1	1	-	-

Revised April, 1934

Printed in U.S.A.

Piece No.	Name	No. Required 726 733	740 745	826 833	840 845	901 902	903 904
5321	Key Whitney No. 10	1	1	1	1	1	1
158146	Speedometer driven pinion shaft bearing (4.38 to 1 ratio) (prior to frame No. 281649 for 733)	1	1	1	1	-	-
158146	Speedometer driven pinion shaft bearing (4.41 to 1 ratio)	-	-	-	-	1	1
158147	Speedometer driven pinion shaft bearing (4.38 to 1 ratio) (used on 733) (after frame No. 281648)	1	-	-	-	-	-
158145	Speedometer driven pinion shaft bearing (4.69 to 1 ratio) (prior to frame No. 281649 for 733)	1	-	-	-	1	-
175441	Speedometer driven pinion shaft bearing (4.69 to 1 ratio) (used on 733) (after frame No. 281648)	1	-	-	-	-	1
158145	Speedometer driven pinion shaft bearing (5.08 to 1 ratio)	1	-	-	-	-	-
184497	Speedometer driven pinion shaft bearing (5.08 to 1 ratio)	1	1	1	1	-	-
184497	Speedometer driven pinion shaft bearing (5.07 to 1 ratio)	-	-	-	-	1	1
170722	Speedometer driven pinion shaft bearing (4.07 to 1 ratio)	-	1	-	1	-	-
170722	Speedometer driven pinion shaft bearing (4.06 to 1 ratio)	-	-	-	-	-	1
175441	Speedometer driven pinion shaft bearing (4.69 to 1 ratio)	-	1	1	1	-	-
137108	Speedometer driven pinion shaft bearing gasket	1	1	1	1	1	1
7827	Speedometer driven pinion shaft bearing screw 1/4-28 x 3/4" hex. hd.	2	2	2	2	2	2
5502	Lockwasher 1/4"	2	2	2	2	2	2
118024	Speedometer driving gear	1	1	1	1	1	1
96529	Speedometer driving shaft screw	1	1	1	1	1	1

STARTER SWITCH (Automatic)

194791	Automatic starter switch assembly	-	-	-	-	1	1
5822	Screw 1/4-28 x 5/8" hex. hd.	-	-	-	-	2	2
5502	Lockwasher 1/4"	-	-	-	-	2	2
33287	Automatic starter switch to generator cable terminal	-	-	-	-	2	2
36111	Cable terminal insulator	-	-	-	-	2	2
194797	Automatic starter switch ground cable assembly	-	-	-	-	1	1
194186	Cable terminal	-	-	-	-	2	2
36111	Cable terminal insulator	-	-	-	-	2	2
194802	Automatic starter switch to ignition coil cable assembly	-	-	-	-	1	1
33287	Cable terminal	-	-	-	-	2	2
36111	Cable terminal insulator	-	-	-	-	2	2
201558	Automatic starter switch safety cutout	-	-	-	-	1	1
201559	Automatic starter switch to safety cutout cable assembly	-	-	-	-	1	1
194806	Automatic starter switch to starter motor cable assembly	-	-	-	-	1	1
140076	Automatic starter switch to starter motor cable terminal (switch end)	-	-	-	-	1	1
194805	Automatic starter switch to starter motor cable terminal (starter end)	-	-	-	-	1	1
196787	Battery frame junction to automatic starter switch cable assembly	-	-	-	-	1	-
196788	Battery frame junction to automatic starter switch cable assembly	-	-	-	-	-	1
196782	Battery frame junction to automatic starter switch cable insulator	-	-	-	-	1	1
127279	Battery frame junction to automatic starter switch cable terminal (battery end)	-	-	-	-	1	1
140076	Battery frame junction to automatic starter switch cable terminal (switch end)	-	-	-	-	1	1
196783	Battery frame junction to automatic starter switch cable terminal (intermediate)	-	-	-	-	1	1

STEERING CONNECTING ROD

158427	Steering connecting rod (used on 740 and 745 custom)	-	1	-	-	-	-
182278	Steering connecting rod	-	-	-	1	-	-
190824	Steering connecting rod	-	-	-	-	-	1
175316	Steering connecting rod (used on 745)	-	1	-	-	-	-
182242	Steering connecting rod	-	-	1	-	-	-
190822	Steering connecting rod	-	-	-	-	1	-

Piece No.	Name	No. Required 726 733	740 745	826 833	840 845	901 902	903 904
116316	Steering connecting rod ball socket	4	4	4	4	4	4
114198	Steering connecting rod ball socket dust cover	2	2	2	2	2	2
128008	Steering connecting rod ball socket dust cover clamp assembly	2	2	2	2	2	2
3729	Screw (No. 10—32 x $1\frac{1}{4}$" rnd. hd.)	4	4	4	4	4	4
5500	Lockwasher ($\frac{3}{16}$")	4	4	4	4	4	4
7003	Nut (No. 10—32)	4	4	4	4	4	4
116313	Steering connecting rod ball socket spring	2	2	2	2	2	2

STEERING GEAR

171811	Steering gear assembly	1					
179984	Steering gear assembly			1			
190798	Steering gear assembly					1	
171812	Steering gear assembly		1				
179983	Steering gear assembly				1		
190799	Steering gear assembly						1
170007	Steering gear case	1		1			
190628	Steering gear case					1	
170008	Steering gear case		1		1		
190627	Steering gear case						1

packardinfo.com

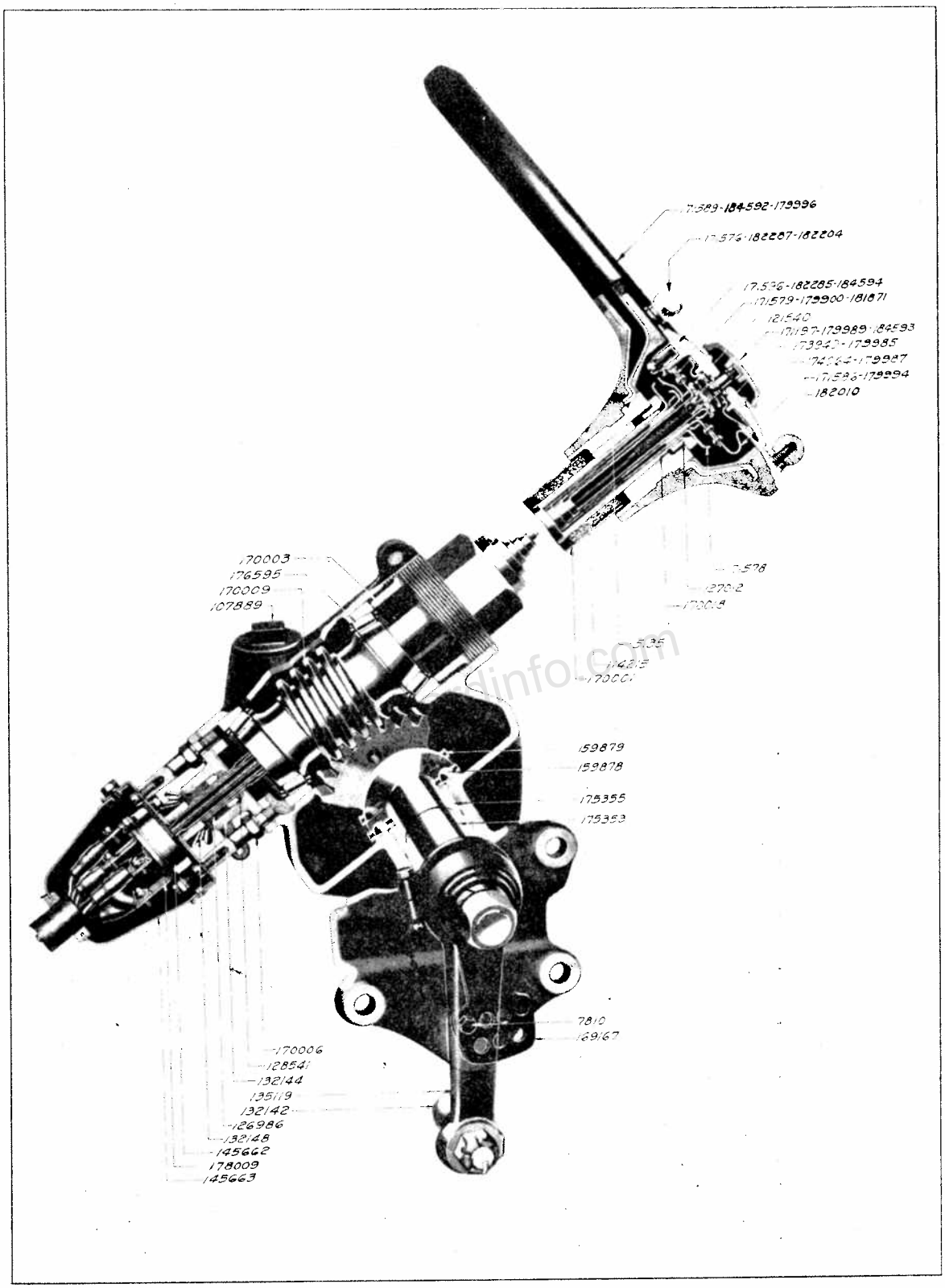

726-733-740-758
826-833-844-540

Printed in U. S. A.

Piece No.	Name	No. Required 726 733	740 745	826 833	840 845	901 902	903 904
7808	Clamp bolt screw ($\frac{5}{16}$ 24 x 1 $\frac{5}{16}$" hex. hd.)	1	1	1	1	1	1
7005	Nut ($\frac{5}{16}$" std.)	1	1	1	1	1	1
5504	Lockwasher	1	1	1	1	1	1
132144	Steering gear case cover—bottom	1	1	1	1	1	1
170006	Screw	2	2	2	2	2	2
5504	Lockwasher ($\frac{5}{16}$")	2	2	2	2	2	2
7815	Clamp screw ($\frac{5}{16}$—24 x 1 $\frac{1}{2}$" hex. hd.)	1	1	1	1	1	1
7005	Nut ($\frac{5}{16}$"—24 plain)	1	1	1	1	1	1
5504	Lockwasher ($\frac{5}{16}$")	1	1	1	1	1	1
132131	Steering gear case cover bottom gasket	1	1	1	1	1	1
128541	Steering gear case cover bottom packing	2	2	2	2	2	2
126986	Steering gear case cover bottom packing nut	1	1	1	1	1	1
159864	Steering gear case cover side	1	1	1	1	1	1
5449	Screw ($\frac{5}{16}$—24 x $\frac{3}{4}$" hex. hd.)	5	5	5	5	5	5
7809	Screw ($\frac{5}{16}$—24 x $\frac{7}{8}$" hex. hd.)	1	1	1	1	1	1
5504	Lockwasher ($\frac{5}{16}$")	6	6	6	6	6	6
132143	Steering gear case cover side gasket	1	1	1	1	1	1
4559	Steering gear case plug ($\frac{1}{8}$" headless pipe plug)	2	2	2	2	2	2
7885	Steering gear case to frame bolt ($\frac{7}{16}$—20 x 1 $\frac{3}{4}$" hex. hd.)	4	4	4	4	4	4
5508	Lockwasher ($\frac{7}{16}$")	4	4	4	4	4	4
7007	Nut ($\frac{7}{16}$"—20 plain)	4	4	4	4	4	4
131046	Washer ($\frac{7}{16}$" plain)	4	4	4	4	4	4
107889	Steering gear case plug flange plug (1 $\frac{1}{4}$" male)	1	1	1	1	1	1
20075	Steering gear case plug gasket	1	1	1	1	1	1
178009	Steering gear lighting switch assembly	1	1	1	1	1	1
145661	Steering gear lighting switch adjusting screw	1	1	1	1	1	1
5500	Lockwasher No. 10	1	1	1	1	1	1
145662	Steering gear lighting switch base assembly	1	1	1	1	1	1
7709	Screw (No. 10 32 x $\frac{7}{16}$" fill. hd.)	2	2	2	2	2	2
5500	Lockwasher (No. 10)	2	2	2	2	2	2
145663	Steering gear lighting switch cover (prior to frame No. 344680 and 193860)	1	1	1	1	1	1
184329	Steering gear lighting switch cover (after frame No. 344679 and 193859)					1	1
145661	Steering gear lighting switch cover screw	1	1	1	1	1	1
5500	Lockwasher (No. 10)	1	1	1	1	1	1
157693	Steering gear lighting switch cover cable bushing (prior to frame No. 344680 and 193860)	1	1	1	1	1	1
194977	Steering gear lighting switch cover cable bushing (after frame No. 344679 and 193859)					1	1
170001	Steering pillar tube assembly	1	1	1	1	1	
190797	Steering pillar tube assembly						1
114215	Steering pillar tube upper end bearing	1	1	1	1	1	1
175361	Steering post cap silencer plate assembly	1	1				
179985	Steering post cap silencer plate assembly (prior to steer. No. 344991 and 194005)			1	1	1	1
194899	Steering post cap silencer plate assembly (after steer. No. 344990 and 194004)					1	1
173949	Steering post cap silencer plate	1	1				
174064	Steering post cap silencer plate gasket	1	1				
179987	Steering post cap silencer plate gasket			1	1	1	1
171596	Steering post control cover	1	1				
182285	Steering post control cover (black)			1	1	1	1
184594	Steering post control cover (walnut)				1		
171597	Steering post control cover assembly (ivory inlay)	1	1				
178451	Steering post control cover assembly (green tint inlay)	1	1				
7709	Screw (No. 10—32 x $\frac{7}{16}$" fill. hd.)	4	4	4	4	4	4
5500	Lockwasher ($\frac{3}{16}$")	4	4	4	4	4	4
174637	Steering post control cover spacer	2	2	2	2	2	2
171578	Steering post control cover support and tube assembly	1	1	1	1	1	1
132162	Steering post control cover support tube anti-rattler	2	2	2	2	2	2
184593	Steering post horn button (walnut)				1		
171197	Steering post horn button	1	1				
179989	Steering post horn button (black)			1	1	1	1
140110	Steering post horn button contact screw (prior to steer. No. 344991 and 194005)	1	1	1	1	1	1
194896	Steering post horn button contact screw assembly (after steer. No. 344990 and 194004)					1	1

packardinfo.com

Piece No.	Name	No. Required 726 733	740 745	826 833	840 845	901 902	903 904
5500	Lockwasher ($\frac{3}{16}$")	1	1	1	1	1	1
141702	Steering post horn button contact washer retaining spring (prior to steer. No. 344991 and 194005)	1	1	1	1	1	1
194900	Steering post horn button contact washer retaining spring (after steer. No. 344990 and 194004)	..	..	..	..	1	1
128792	Steering post horn button cushion	1	1	1	1	1	1
194897	Steering post horn button cushion shim (after steer. No. 344990 and 194004)	..	..	..	..	x	x
121540	Steering post horn button spring (prior to steer. No. 344991 and 194005)	1	1	1	1	1	1
194901	Steering post horn button spring (after steer. No. 344990 and 194004)	..	..	..	..	1	1
194904	Steering post horn button spring retainer (after steer. No. 344990 and 195004)	..	..	..	..	1	1
194905	Steering post horn button spring retainer fibre washer (after steer. No. 344990 and 195004)	..	..	..	..	1	1
33287	Steering post horn button to horn cable terminal	..	..	..	..	1	1

packardinfo.com

Printed in U. S. A.

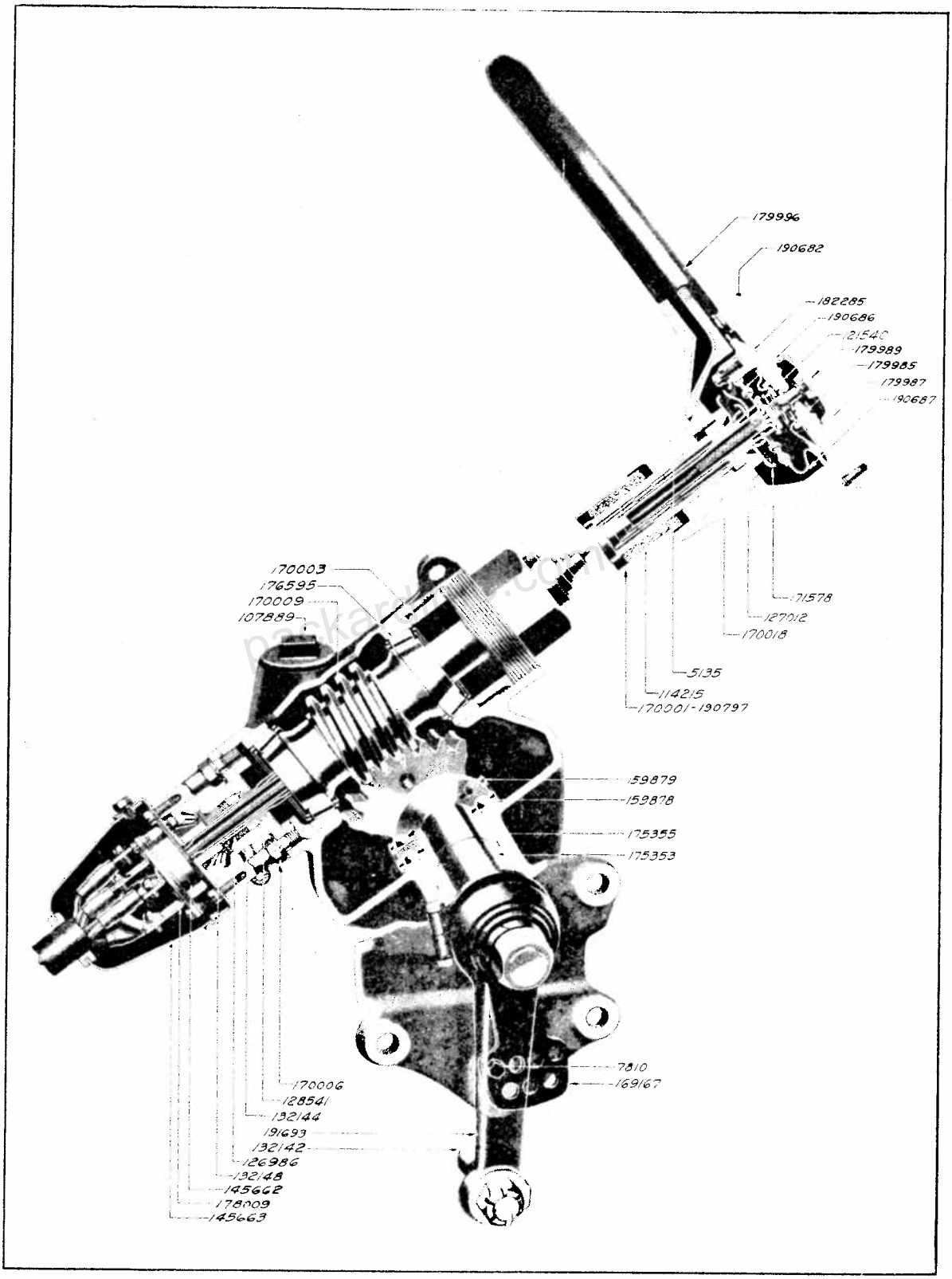
179996
190682
182285
190686
21540
179989
179985
179987
190687
170003
176595
170009
107889
71578
127012
170018
5135
114215
170001-190797
159879
159878
175355
175353
7810
169167
170006
128541
132144
191693
132142
126986
132148
145662
178009
145663

packardinfo.com

Piece No.	Name	No. Required 726 733	740 745	826 833	840 845	901 902	903 904
36111	Steering post horn button to horn cable terminal insulator					1	1
177676	Steering post horn button to horn cable junction cable contact cup (prior to steer. No. 344991 and 194005)	1	1	1	1	1	1
194603	Steering post horn button to horn cable junction cable contact cup insulator (prior to steer. No. 344991 and 194005)	1	1	1	1	1	1
194907	Steering post horn button contact disc lower retainer (after steer. No. 344990 and 194004)					1	1
194906	Steering post horn button contact disc lower retainer insulator (after steer. No. 344990 and 194004)					1	1
177676	Steering post horn button to lighting switch terminal No. 9 cable contact cup	1	1				
146952	Steering post horn button to lighting switch terminal No. 9 cable contact cup insulator	1	1				
171577	Steering post to horn cable contact cup insulator retainer (prior to steer. No. 344991 and 194005)	1	1	1	1	1	1
194908	Steering post to horn cable contact cup insulator retainer (after steer. No. 344990 and 194004)					1	1
36111	Steering post horn button to lighting switch terminal No. 9 cable terminal insulator	1	1	1	1		
71397	Terminal ($\frac{11}{64}$" eye) open end	1	1	1	1		
176594	Steering post to instrument board bracket and cap assembly	1	1	1	1	1	1
7820	Steering post to instrument board bracket screw ($\frac{3}{8}$" - 24 x 1$\frac{3}{8}$" hex. hd.)	2	2	2	2	2	2
5506	Lockwasher ($\frac{3}{8}$")	2	2	2	2	2	2
3911	Washer ($\frac{3}{8}$")	2	2	2	2	2	2
175364	Steering post to instrument board bracket screw plate	1	1	1	1	1	1
7724	Steering post to instrument bracket cap screw ($\frac{1}{4}$" - 20 x 1" fill. hd.)	2	2	2	2	2	2
5502	Lockwasher ($\frac{1}{4}$")	2	2	2	2	2	2
3907	Washer ($\frac{1}{4}$" plain)	2	2	2	2	2	2
179990	Steering post lighting switch control shaft assembly			1			
171579	Steering post lighting switch control shaft assembly	1	1				
181871	Steering post lighting switch control shaft assembly				1		
190686	Steering post lighting switch control shaft assembly					1	1
171779	Steering post lighting switch control shaft lever	1	1				
179991	Steering post lighting switch control shaft lever			1	1	1	1
171196	Steering post lighting switch control shaft lever hub	1	1	1	1	1	1
182287	Steering post lighting switch control shaft lever knob			1			
171576	Steering post lighting switch control shaft lever knob (ivory)	1	1				
182204	Steering post lighting switch control shaft lever knob				1		
178442	Steering post lighting switch control shaft lever knob (green tint)	1	1				
190682	Steering post lighting switch control shaft lever knob					1	1
171581	Steering post lighting switch control shaft lever knob spacer	1	1				
179993	Steering post lighting switch control shaft lever knob spacer			1	1	1	1
171580	Steering post lighting switch control shaft lever knob screw	1	1				
140173	Steering post lighting switch control shaft lever knob screw			1	1	1	1
171574	Steering post lighting switch control shaft spacer	1	1	1	1	1	1
158151	Steering post throttling connecting rod assembly	1	1	1	1		
190673	Steering post throttling connecting rod assembly					1	1
7513	Yoke end adj. ($\frac{3}{16}$")	1	1	1	1	1	1
7003	Nut (No. 10 - 32 plain)	1	1	1	1	1	1
7523	Yoke end pin ($\frac{3}{16}$")	1	1	1	1	1	1
4690	Cotter pin ($\frac{1}{16}$ x $\frac{3}{8}$")	1	1	1	1	1	1
190192	Washer - spring ($\frac{3}{16}$")	1	1	1	1	1	1
164007	Steering post throttling connecting rod eye screw special	1	1	1	1	1	1
3874	Washer ($\frac{5}{16}$")	1	1	1	1	1	1
5502	Lockwasher ($\frac{1}{4}$")	1	1	1	1	1	1
115056	Nut - special	1	1	1	1	1	1
185373	Steering post throttling connecting rod eye spring	1	1	1	1	1	1
145300	Steering post throttle control gear	1	1	1	1	1	1
186856	Steering post throttle control gear shaft	1	1	1	1	1	1
186436	Steering post throttle control gear shaft washer	1	1	1	1	1	1
171586	Steering post throttle control shaft assembly	1	1				
179994	Steering post throttle control shaft assembly			1			
156616	Steering post throttle control shaft	1	1				
182010	Steering post throttle control shaft assembly				1		

Piece No.	Name	No. Required 726 733	740 745	826 833	840 845	901 902	904
190687	Steering post throttle control shaft assembly	..	..	..	..	1	1
132167	Steering post throttle control shaft anti-rattler	2	2	2	2	2	2
171778	Steering post throttle control shaft lever	1	1	..	..	..	..
179995	Steering post throttle control shaft lever	..	..	1	1	1	1
5708	Rivet ($\frac{1}{8}$ x $\frac{7}{32}$" rnd. hd.)	2	2	2	2	2	2
171198	Steering post throttle control shaft lever hub	1	1	1	1	1	1
171576	Steering post throttle control shaft lever knob (ivory)	1	1	..	..	..	..

packardinfo.com

Printed in U. S. A.

Piece No.	Name	No. Required 726 733	740 745	826 833	840 845	901 902	903 904
182287	Steering post throttle control shaft lever knob			1			
178442	Steering post throttle control shaft lever knob (green tint)	1	1				
182204	Steering post throttle control shaft lever knob				1		
190682	Steering post throttle control shaft lever knob					1	1
171581	Steering post throttle control shaft lever knob spacer	1	1				
179993	Steering post throttle control shaft lever knob spacer			1	1	1	1
171580	Steering post throttle control shaft lever knob screw	1	1				
140173	Steering post throttle control shaft lever knob screw			1	1	1	1
171572	Steering post throttle control shaft upper and lever hub assembly	1	1	1	1	1	1
132148	Steering post throttle control shaft pinion	1	1	1	1	1	1
5387	Screw (No. 10—32 x 7/8" fill. hd.)	1	1	1	1	1	1
5500	Lockwasher (3/16")	1	1	1	1	1	1
7003	Nut (No. 10—32 plain)	1	1	1	1	1	1
171570	Steering post throttle control shaft spacer	1	1	1	1	1	1
5739	Steering post to toe board grommet plate screw (No. 10—32 x 1/2" hex. hd.)	3	3	3	3		
7003	Nut (No. 10—32)	3	3	3	3		
5500	Lockwasher (No. 10)	3	3	3	3		
175358	Steering post to toe board grommet	1	1				
181369	Steering post to toe board grommet			1	1		
191255	Steering post to toe board grommet					1	1
176931	Steering post to toe board grommet clamp	1	1	1	1		
5471	Screw (1/4"—28 x 3/4" hex. hd.)	1	1	1	1		
5502	Lockwasher (1/4")	1	1	1	1		
62065	Washer (17/64" x 3/4" plain)	1	1	1	1		
7004	Nut (1/4"—28 hex. hd.)	1	1	1	1		
127012	Steering post upper end nut	1	1	1	1	1	1
184592	Steering wheel assembly (walnut)				1		
171589	Steering wheel assembly	1	1				
179996	Steering wheel assembly (black)			1	1	1	1
5135	Key (3/16" x 3/16" x 1 1/8")	1	1	1	1	1	1
171756	Steering wheel hub	1	1				
5722	Screw (1/4"—20 x 5/8" fill. hd.)	8	8				
5502	Lockwasher (1/4")	8	8				
170009	Steering worm	1	1	1	1	1	1
132121	Steering worm key	1	1	1	1	1	1
170018	Steering worm and post assembly	1	1	1	1	1	1
175353	Steering worm sector and shaft	1	1	1	1	1	1
7014	Nut (7/8"—14)	1	1	1	1	1	1
5520	Lockwasher (7/8")	1	1	1	1	1	1
126985	Plain washer	1	1	1	1	1	1
175355	Steering worm sector and shaft bushing	1	1	1	1	1	1
169167	Steering worm sector and shaft bushing lock	1	1	1	1	1	1
7810	Screw (5/16"—24 x 1 1/4")	1	1	1	1	1	1
5504	Lockwasher (5/16")	1	1	1	1	1	1
7005	Nut (5/16"—24)	1	1	1	1	1	1
5681	Washer (5/16")	1	1	1	1	1	1
132122	Steering worm sector adjusting screw	1	1	1	1	1	1
159866	Steering worm sector adjusting screw lock	1	1	1	1	1	1
5344	Steering worm sector shaft bushing lock clamp screw	1	1	1	1	1	1
7004	Plain hex. nut (1/4"—28)	1	1	1	1	1	1
3868	Washer (1/4")	1	1	1	1	1	1
5502	Lockwasher (1/4")	1	1	1	1	1	1
135119	Steering worm sector and shaft lever	1	1	1	1		
191693	Steering worm sector and shaft lever					1	1
132142	Ball joint	1	1	1	1	1	1
4551	Key (No. 5 Whitney)	1	1	1	1	1	1
7109	Nut (9/16"—18)	1	1	1	1	1	1
4305	Cotter (1/8" x 7/8")	1	1	1	1	1	1
114211	Steering worm sector and shaft lever ball joint cup washer	2	2	2	2	2	2
114316	Plain washer	1	1	1	1	1	1
169591	Steering worm sector and shaft oil seal	1	1	1	1	1	1

packardinfo.com

Piece No.	Name	No. Required 726 733	740 745	826 833	840 845	901 902	903 904
159879	Steering worm sector and shaft thrust bearing inner	1	1	1	1	1	1
159878	Steering worm sector and shaft bearing outer	1	1	1	1	1	1
176595	Steering worm thrust bearing assembly (Timken)	2	2	2	2	2	1
170003	Steering worm thrust bearing adjusting nut	1	1	1	1	1	2

SPECIAL STEERING GEAR

($1\frac{5}{32}$" longer than Standard)
Parts Not Listed Same As Standard 904
(For Model 904 Only)

194950	Steering gear assembly	1
194940	Steering pillar tube assembly	1
194943	Steering post control cover support and tube assembly	1
197984	Steering post to instrument board bracket and cap assembly	1
194957	Steering post to lighting switch control shaft assembly	1
194948	Steering post throttle control shaft assembly	1
194956	Steering post to toe board grommet	1
194955	Steering post and post assembly	1

TAIL LAMP

116458	Backing light bulb	1	1	1	1	2	2
176604	Backing light glass—white	1	1	1	1	..	..
116458	Stop light bulb	1	1	1	1	..	..
176603	Stop light glass—amber	1	1	1	1	..	..
135909	Stop light switch	1	1	..	..	..	..
183067	Stop light switch	..	..	1	1	..	..
190885	Stop light switch	..	..	..	..	1	1
5198	Screw (No. 10—32 x $\frac{5}{8}$" hex. hd.)	2	2	2	2	2	2
5500	Lockwasher ($\frac{3}{16}$")	2	2	2	2	2	2
183068	Stop light switch cable bushing	..	..	2	2	2	2
5251	Stop light switch adjusting screw (prior to frame No. 289100 for 726-733, 182055 for 740 and 181421 for 745)	1	1	..	..	..	..
5784	Stop light switch adjusting screw (after frame No. 289099 for 726-733, 182054 for 740 and 181420 for 745)	1	1	1	1	..	..
7004	Nut ($\frac{1}{4}$"—28 plain)	1	1	1	1	..	..
167971	Stop light switch connecting plug assembly	1	1	..	..	..	..
143442	Stop light switch connecting plug insulator	1	1	..	..	..	..
48835	Stop light switch connector assembly	1	1	..	..	..	..
7910	Screw (No. 6—40 x $\frac{3}{8}$" rnd. hd. mach.)	2	2	..	..	..	..
3516	Lockwasher (No. 6)	2	2	..	..	..	..
171171	Tail lamp	1	1	1	1	..	..
190723	Tail lamp—left	..	..	..	..	1	..
186320	Tail lamp—left	..	..	..	..	..	1
186321	Tail lamp—right	..	..	..	..	..	1
190722	Tail lamp—right	..	..	..	..	1	..
7711	Screw ($\frac{1}{4}$"—29 x $\frac{5}{8}$" fill. hd.)	..	..	..	..	4	4
7004	Nut ($\frac{1}{4}$"—28 plain)	2	2	2	2	..	..
5502	Lockwasher ($\frac{1}{4}$")	2	2	2	2	4	4
3868	Washer ($\frac{1}{4}$")	..	..	..	..	4	4
175722	Tail lamp bracket and trunk rack assembly—left (used on 745) (used on body models 420-4-5) (specify color)	..	1	..	..	..	..
162495	Tail lamp bracket and trunk rack assembly—left (used on 745) (used on body models 421-2-3-6-7-8-9-439-451) (specify color)	..	1	..	..	..	..
171095	Tail lamp bracket assembly (used on 726-733-740)	1	1	1	..	..	..
181090	Tail lamp bracket assembly	..	..	..	1	..	..
163611	Tail lamp bracket assembly (used on 745) (use with double or single wheel carrier)	..	1	..	..	..	..
186328	Tail lamp bracket—right	..	..	..	..	1	1
186327	Tail lamp bracket—left	..	..	..	..	1	1

packardinfo.com

Printed in U. S. A.

Piece No.	Name	No. Required 726 733	740 745	826 833	840 845	901 902	903 904
181219	Tail lamp bracket gasket	..	..	..	1	..	..
186329	Tail lamp bracket gasket	..	..	..	..	4	4
7809	Tail lamp bracket to frame bolt (screw $\frac{5}{16}$—24 x $\frac{7}{8}$" hex. hd.) (used on 726-733-740)	3	3	3	3	..	..
5590	Screw ($\frac{3}{8}$—24 x $1\frac{1}{8}$" hex. hd.) (used on 745) (use with double or single wheel carrier)	..	3	1	1	..	..
5504	Lockwasher ($\frac{5}{16}$") (used on 726-733-740)	3	3	3	3	..	..
5506	Lockwasher ($\frac{3}{8}$") (used on 745) (use with double or single wheel carrier)	..	3	..	..	..	..
7005	Nut ($\frac{5}{16}$" —24) (used on 726-733-740)	3	3	3	3	..	..
7006	Nut ($\frac{3}{8}$" —24 plain) (used on 745) (use with double or single wheel carrier)	..	1	..	..	..	..
186330	Tail lamp bracket license tag plate	..	..	..	..	1	1
190092	Tail lamp bracket license tag plate clip	..	..	..	..	1	1
5898	Screw ($\frac{1}{4}$—20 x $\frac{9}{16}$" rnd. hd.)	..	..	..	..	1	1
5502	Lockwasher ($\frac{1}{4}$")	..	..	..	..	1	1

packardinfo.com

Piece No.	Name	No. Required 726 733	740 745	826 833	840 845	901 902	903 904
190332	Tail lamp bracket license tag plate clamp screw					1	1
190091	Tail lamp bracket license tag plate clamp screw nut					1	1
5502	Lockwasher ($\frac{1}{4}$")					1	1
190193	Tail lamp bracket support					2	2
194539	Tail lamp bracket support spacer (used on 904 only)						2
5449	Tail lamp bracket support to frame screw ($\frac{5}{16}$"-24 x $\frac{3}{4}$" hex. hd.) (used on 901-902-903)					4	4
7809	Screw ($\frac{5}{16}$"-24 x $\frac{7}{8}$" hex. hd) (used on 904 only)						4
5504	Lockwasher ($\frac{5}{16}$")					4	4
7005	Nut ($\frac{5}{16}$"-24)					4	4
7804	Tail lamp bracket to support bracket bolt ($\frac{5}{16}$"-18 x $\frac{3}{4}$" hex. hd.)					6	6
5504	Lockwasher ($\frac{5}{16}$")					6	6
102590	Tail lamp bulb	1	1	1	1	2	2
194449	Tail lamp bulb retainer assembly					2	2
184478	Tail lamp (right) cable clip					2	
5569	Screw (No. 10-32 x $\frac{1}{2}$" fill. hd.)					2	
5500	Lockwasher (No. 10)					2	
7003	Nut (No.10-32)					2	
138913	Tail lamp connecting plug assembly	1	1	1	1		
127039	Tail lamp connecting plug assembly					1	2
138911	Tail lamp connecting plug sleeve	1	1	1	1		
194314	Tail lamp connecting plug sleeve					1	2
176597	Tail lamp door assembly	1	1	1	1		
194444	Tail lamp door assembly						2
194445	Tail lamp door assembly					2	
135111	Tail lamp door fastening screw	4	4	4	4		
176602	Tail lamp door glass - ruby	1	1	1	1		
194446	Tail lamp door glass					2	2
194447	Tail lamp door glass gasket					2	2
194448	Tail lamp door lock screw					2	2
176599	Tail lamp door glass retainer	1	1	1	1		
176600	Tail lamp door glass retainer screw	2	2	2	2		
176601	Tail lamp door glass retainer gasket	1	1	1	1		
194450	Tail lamp left license glass					1	1
194975	Tail lamp left license glass gasket					1	1
194453	Tail lamp left license glass retainer					2	2
70296	Tail lamp left license glass retainer screw					2	2
176596	Tail lamp inside plug and contacts assembly	1	1	1	1		
176605	Tail lamp license tag illuminating glass	1	1	1	1		
177332	Tail lamp license tag illuminating glass gasket	1	1	1	1		

TIRE PUMP

176762	Tire pump equipment (prior to transmission No. 346288 and 194613)	1	1	1	1	1	1
183477	Tire pump air tube assembly	1	1	1	1		
194033	Tire pump air tube assembly					1	1
157477	Union nut (use with rolled brass tubing)	2	2	2	2	2	2
5467	Union nut ($\frac{1}{4}$") (use with seamless copper tubing)	2	2	2	2	2	2
147406	Tire pump air tube clip	1	1	1	1	1	1
7706	Bolt	1	1	1	1	1	1
7003	Nut	1	1	1	1	1	1
5500	Lockwasher	1	1	1	1	1	1
116410	Tire pump air tube hose connection	1	1	1	1	1	1
55125	Tire pump air tube hose connection cap	1	1	1	1	1	1
7007	Tire pump air tube hose connection clamp nut ($\frac{7}{16}$" x 20)	2	2	2	2	2	2
3883	Washer ($\frac{7}{16}$")	1	1	1	1	1	1
116931	Tire pump connecting rod assembly	1	1	1	1	1	1
116932	Tire pump connecting rod bushing	1	1	1	1	1	1
110415	Tire pump cover gasket	1	1	1	1	1	1

packardinfo.com

Printed in U. S. A.

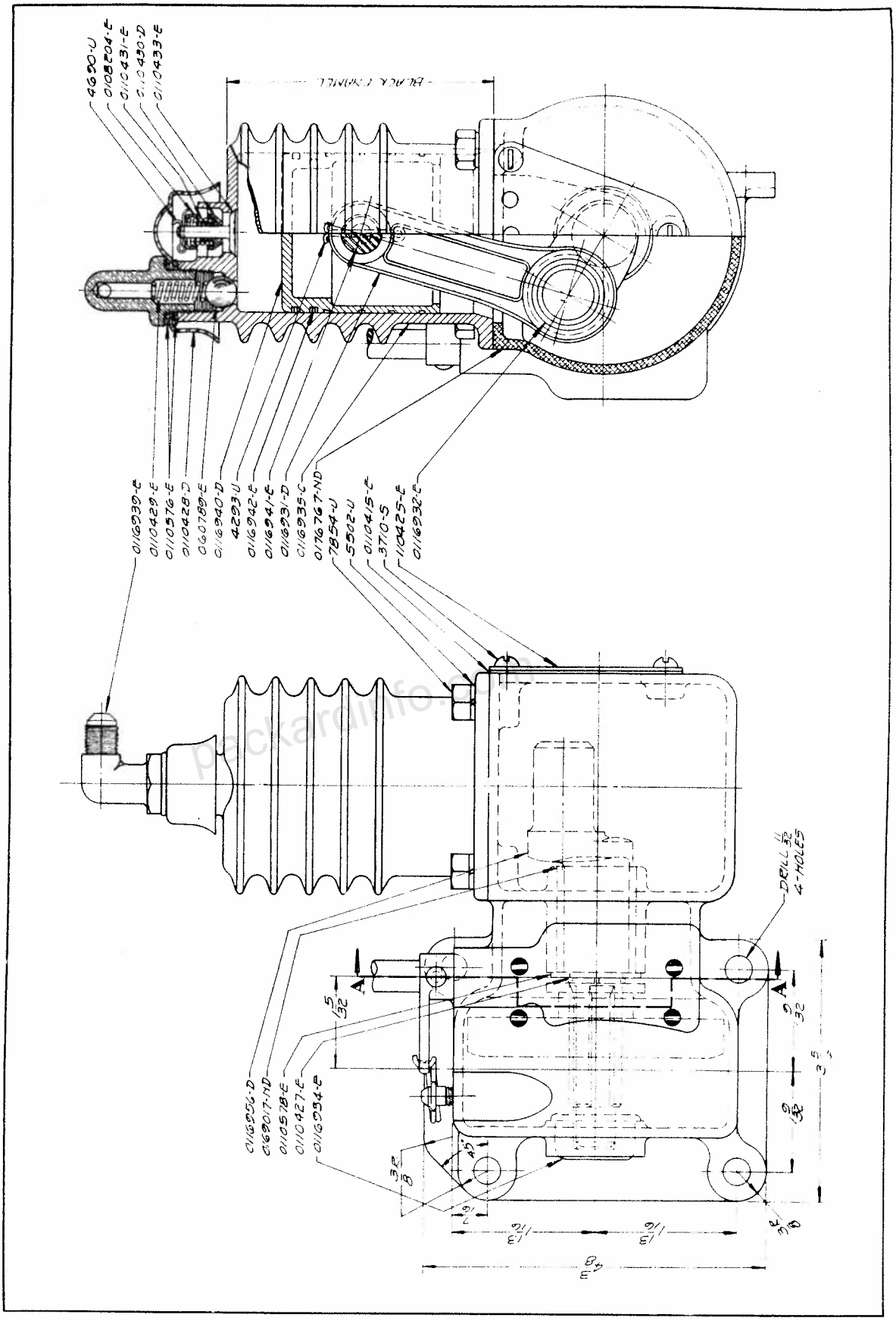

726-733-740-745
826-833-840-845

Piece No.	Name	No. Required 726 733	740 745	826 833	840 845	901 902	903 904
116956	Tire pump crank	1	1	1	1	1	1
116933	Tire pump crank bushing large	1	1	1	1	1	1
116934	Tire pump crank bushing small	1	1	1	1	1	1
110427	Tire pump crank thrust ring	1	1	1	1	1	1
110577	Tire pump crank thrust washer	1	1	1	1	1	1
116935	Tire pump cylinder	1	1	1	1	1	1
7854	Screw ($\frac{1}{4}$ 20 x $\frac{1}{2}$" hex. hd.)	4	4	4	4	4	4
5502	Lockwasher ($\frac{1}{4}$")	4	4	4	4	4	4
108204	Tire pump cylinder intake valve spring washer	1	1	1	1	1	1
176900	Tire pump gear	1	1	1	1	1	1
127286	Tire pump hose assembly	1	1	1	1	1	1
176767	Tire pump housing	1	1	1	1	1	1
110425	Tire pump housing cover	1	1	1	1	1	1
3710	Screw (No. 8—32 x $\frac{3}{8}$" rnd. hd. mach.)	1	1	1	1	1	1
4471	Plug ($\frac{3}{8}$" pipe headless)	1	1	1	1	1	1
110433	Tire pump inlet valve	1	1	1	1	1	1
110430	Tire pump inlet valve guide	1	1	1	1	1	1
110431	Tire pump inlet valve spring	1	1	1	1	1	1
4690	Cotter ($\frac{1}{16}$ x $\frac{3}{8}$")	1	1	1	1	1	1
116939	Tire pump outlet union	1	1	1	1	1	1
110429	Tire pump outlet valve spring	1	1	1	1	1	1
116940	Tire pump piston	1	1	1	1	1	1
116941	Tire pump piston pin	1	1	1	1	1	1
4293	Cotter ($\frac{3}{32}$ x 1")	1	1	1	1	1	1
116942	Tire pump piston ring	6	6	6	6	6	6
110579	Tire pump shaft lock wire	1	1	1	1	1	1
4305	Cotter ($\frac{1}{8}$ x $\frac{7}{8}$")	1	1	1	1	1	1
177924	Tire pump shifter shaft assembly	1	1	1	1	1	1
125011	Tire pump shifter shaft end	1	1	1	1	1	1
116945	Tire pump shifter shaft extension ring	1	1	1	1	1	1
116943	Tire pump shifter fork	1	1	1	1	1	1
4551	Key (Woodruff No. 5)	1	1	1	1	1	1
110426	Tire pump shifter spring	1	1	1	1	1	1
110432	Tire pump shifter spring pin	1	1	1	1	1	1
5294	Tire pump to transmission case screw	1	1	1	1	1	1
7861	Screw ($\frac{5}{16}$—24 x 1" hex. hd.)	3	3	3	3	3	3
5504	Lockwasher ($\frac{5}{16}$")	4	4	4	4	4	4
110428	Tire pump valve cover	1	1	1	1	1	1
110576	Tire pump valve cover gasket	2	2	2	2	2	2
60789	Tire pump valve outlet	1	1	1	1	1	1

TOE BOARD

170518	Toe board—inclined	1	1	..	..	..	..
181362	Toe board assembly	..	..	1	1	..	..
191118	Toe board assembly	..	..	..	..	1	1
195951	Toe board assembly (less starter switch hole)	..	..	..	..	1	1
194953	Toe board assembly (use with $1\frac{5}{32}$" longer than standard 904 steering gear)	..	..	..	..	..	1
8034	Screw (long) ($\frac{1}{4}$—28 x $1\frac{1}{2}$" oval hd.)	2	2	2	2	..	..
5916	Screw (No. 10—32 x $1\frac{1}{2}$" flat hd. mach.)	..	..	..	..	2	2
5764	Screw (short) ($\frac{1}{4}$—28 x $\frac{3}{4}$" oval hd. mach.)	5	5	..	..	..	..
7870	Screw (short) ($\frac{1}{4}$—28 x $\frac{5}{8}$" hex. hd. mach.)	..	..	5	5	..	..
5471	Screw ($\frac{1}{4}$—28 x $\frac{3}{4}$" hex. hd.)	..	..	..	..	6	6
3866	Washer ($\frac{3}{16}$")	..	..	..	..	2	2
62065	Washer ($\frac{17}{64}$ x $\frac{3}{4}$" plain)	3	3	3	3	..	..
185832	Washer	..	..	..	..	2	2
5502	Lockwasher ($\frac{1}{4}$")	3	3	3	3	..	..
5500	Lockwasher (No. 10)	..	..	..	..	2	2
7004	Nut ($\frac{1}{4}$"—28 plain)	3	3	3	3	..	..
7003	Nut (No. 10—32 plain)	..	..	..	..	2	2
194856	Toe board to change speed lever support liner	..	..	..	..	2	2
194774	Rivet ($\frac{5}{32}$ x $\frac{1}{4}$" oval hd. split)	..	..	..	..	4	4
191121	Toe board change speed lever support liner	..	..	..	..	1	1
191120	Toe board change speed lever support liner plate	..	..	..	..	1	1

packardinfo.com

Printed in U. S. A.

Piece No.	Name	No. Required 726 733	740 745	826 833	840 845	901 902	903 904
194780	Screw (No. 6 .135 x 7/16")					4	4
191247	Screw (No. 6 .135 x 5/16")					1	1
194667	Toe board change speed lever support liner plate gasket					1	1
191158	Toe board liner (side)					2	2
139521	Rivet (5/32 x 7/16" for No. 257 oval hd. split)					6	6
191134	Toe board insulation					1	1
194952	Toe board insulation (use with 1 5/32" longer than standard 904 steering gear)						1
158163	Toe board inclined bushing (for speedometer driving shaft) (prior to frame No. 293663 for 726-733 -183960 for 740 and 183262 for 745)	1	1				
178833	Toe board inclined bushing (for speedometer driving shaft) (after frame No. 293662 for 726-733 -183959)	1	1	1	1		
190231	Toe board inclined bushing (for speed. driving shaft)					1	1
158166	Toe board inclined bushing (for carburetor air valve conn. rod) (for 740 and 183262 for 745)	1	1	1	1		
158164	Toe board inclined bushing cap (for speedometer driving shaft)	2	2	2	2		
5389	Screw (No. 10-32 x 7/16 fill. hd.)	2	2	2	2		
5500	Lockwasher (No. 10)	2	2	2	2		
158167	Toe board inclined bushing spring (for carburetor air valve connecting rod)	1	1	1	1		
158444	Toe board inclined liner (center)	1	1	1	1		
181403	Toe board inclined accelerator pedal foot rest			1	1		
190963	Toe board inclined accelerator pedal foot rest					1	1
7854	Screw			1	1		
7837	Screw (1/4-20 x 7/8" hex. hd.)					2	2
5500	Lockwasher			1	1		
5502	Lockwasher (1/4")					2	2
181364	Toe board inclined accelerator pedal retracting spring bracket			1	1		
174428	Toe board inclined pedal hole bumper	2	2	2	2		
191646	Toe board inclined pedal hole bumper					2	2
191133	Toe board inclined pedal hole bumper retainer					1	1
175479	Toe board inclined pedal hole dust cover	2	2	2	2		
190129	Toe board inclined pedal hole dust cover					2	2

packardinfo.com

TOOLS

121500	Tool bag	1		1		1	
128286	Tool roll		1		1		
190681	Tool roll					1	1
180753	Tool box—auto jack and handle assembly	1	1	1	1	1	1
159714	Tool box—auto jack handle	1	1	1	1		
186166	Tool box—auto jack handle					1	1
194299	Tool box jack container					1	1
194298	Tool box jack handle and wheel wrench container					1	1
115771	Tool box—hammer	1		1		1	
128287	Tool box—hammer		1		1	1	1
121501	Tool box—monkey wrench	1		1		1	
128288	Tool box—monkey wrench		1		1	1	1
22104	Tool box—pliers	1		1		1	
128289	Tool box—pliers		1		1	1	1
71030	Tool box—punch	1	1	1	1	1	1
55505	Tool box—screw driver (3" blade)	1		1		1	
128290	Tool box—screw driver (3" blade)		1		1	1	1
22103	Tool box—screw driver (6" blade)	1		1		1	
128291	Tool box—screw driver (6" blade)		1		1	1	1
190617	Tool box—single head box wrench					1	1
142054	Tool box—double head box wrench	1	1	1	1		
172965	Tool box—water pump packing wrench (1 1/2" opening)	1	1	1	1		
97861	Tool box—water pump packing wrench (1 5/16" opening)			1	1		
47669	Tool box—wrench 15 degrees double head (1/4 and 5/16" openings)	1	1	1	1	1	1
46707	Tool box—wrench 15 degrees double head (7/16 and 1/2" openings)	1	1	1	1	1	1
46706	Tool box—wrench 15 degrees double head (9/16 and 5/8" openings)	1	1	1	1	1	1
115773	Tool box—wrench 15 degrees single head (9/16" openings—special)	1	1	1	1	1	1

Piece No.	Name	No. Required 726 733	740 745	826 833	840 845	901 902	903 904
115774	Tool box—wrench 15 degrees double head ($\frac{3}{4}$ x $\frac{14}{16}$" openings)	1	1	1	1	1	1
46704	Tool box—wrench 15 degrees double head ($\frac{15}{16}$ and 1" openings)	1	1	1	1	..	..
177326	Tool box—wheel and jack wrench	1	1	1	1	..	..
186165	Tool box—wheel and jack wrench	..	..	..	..	1	1
61577	Wheel puller bolt	1	1	1	1	1	1
176958	Wheel puller shell	1	..	1	..	1	..
115781	Wheel puller shell	..	1	..	1	..	1

TOOL BOX

190773	Tool box assembly					1	1
7827	Tool box to bonnet ledge bolt ($\frac{1}{4}$—28 x $\frac{3}{4}$" hex. hd.)					2	2
5502	Lockwasher ($\frac{1}{4}$")					2	2
7004	Nut ($\frac{1}{4}$"—28)					2	2
62065	Washer ($\frac{17}{64}$ x $\frac{3}{4}$")					2	2
190736	Tool box cover assembly					1	1
194083	Tool box cover and finishing plate assembly					1	1
191416	Tool box cover cushion					1	1
7003	Tool box cover cushion retainer nut					14	14
3866	Washer ($\frac{9}{16}$")					14	14
186982	Tool box cover lock cylinder assembly					1	1
194883	Tool box cover lock bolt					1	1
194884	Tool box cover lock bolt spacer					1	1
194885	Tool box cover lock bolt spacer screw					1	1
7003	Nut (No. 10—32)					1	1
5500	Lockwasher (No. 10)					1	1
190719	Tool box cover lock bolt bracket screw					1	1
7004	Nut ($\frac{1}{4}$"—28)					1	1
5502	Lockwasher ($\frac{1}{4}$")					1	1
190706	Tool box cover lock bolt spring					1	1
190721	Tool box cover lock bolt striker plate					1	1
186981	Tool box cover lock cylinder plate					1	1
190305	Tool box cover lock cylinder plate to cylinder screw (No. 4—40 x $\frac{3}{16}$" F. H.)					1	1
191895	Tool box cover finishing plate					1	1
5770	Tool box to fender screw ($\frac{1}{4}$—28 x $\frac{7}{8}$" O. H. mach.) (with side wheel carrier)					2	2
7827	Tool box to fender bolt ($\frac{1}{4}$—28 x $\frac{3}{4}$" hex. hd.)					9	9
5502	Lockwasher ($\frac{1}{4}$")					9	9
7004	Nut ($\frac{1}{4}$—28")					9	9
62065	Washer ($\frac{17}{64}$ x $\frac{3}{4}$")					10	10
194846	Washer					8	8
194847	Tool box to fender bolt washer gasket					8	8
190756	Tool box to frame bracket					1	1
5449	Screw ($\frac{5}{16}$—24 x $\frac{3}{4}$" hex. hd.)					4	4
3909	Washer ($\frac{5}{16}$")					2	2
5504	Lockwasher ($\frac{5}{16}$")					4	4
7005	Nut ($\frac{5}{16}$"—24)					4	4
190805	Tool box liner					1	1
190751	Tool box side cover gasket					1	1
5502	Lockwasher ($\frac{1}{4}$")					6	6
7801	Screw ($\frac{1}{4}$—28 x $\frac{1}{2}$" hex. hd.)					6	6
7004	Nut ($\frac{1}{4}$"—28)					3	3

TRANSMISSION

183044	Change speed lever assembly	1	1	1	1	..	..
186797	Change speed lever					1	1
186781	Change speed lever anti-rattle spring					1	1
173322	Change speed lever ball (black)	1	1	1	..	..	..
184595	Change speed lever ball (walnut)				1	..	..
191563	Change speed lever ball (black)					1	1
166897	Change speed lever ball (onyx)	1	1	1	1	1	1
186778	Change speed lever ball cover felt					1	1
111474	Change speed lever ball socket—lower	1	1	..	..	..	..

Printed in U. S. A.

packardinfo.com

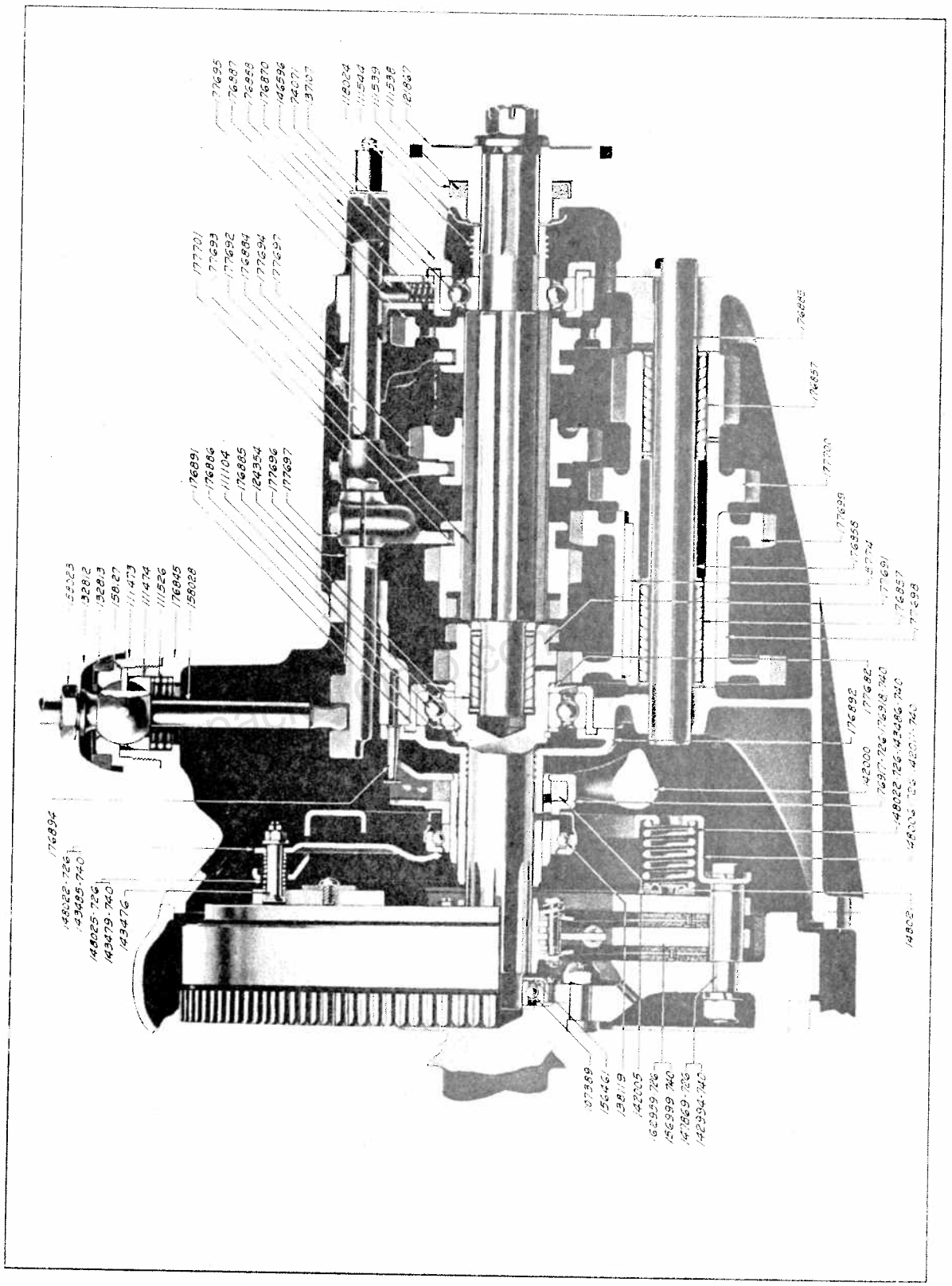

After transmission No. 283199 for 726-733 and 180699 for 740-745

726-733-740-745

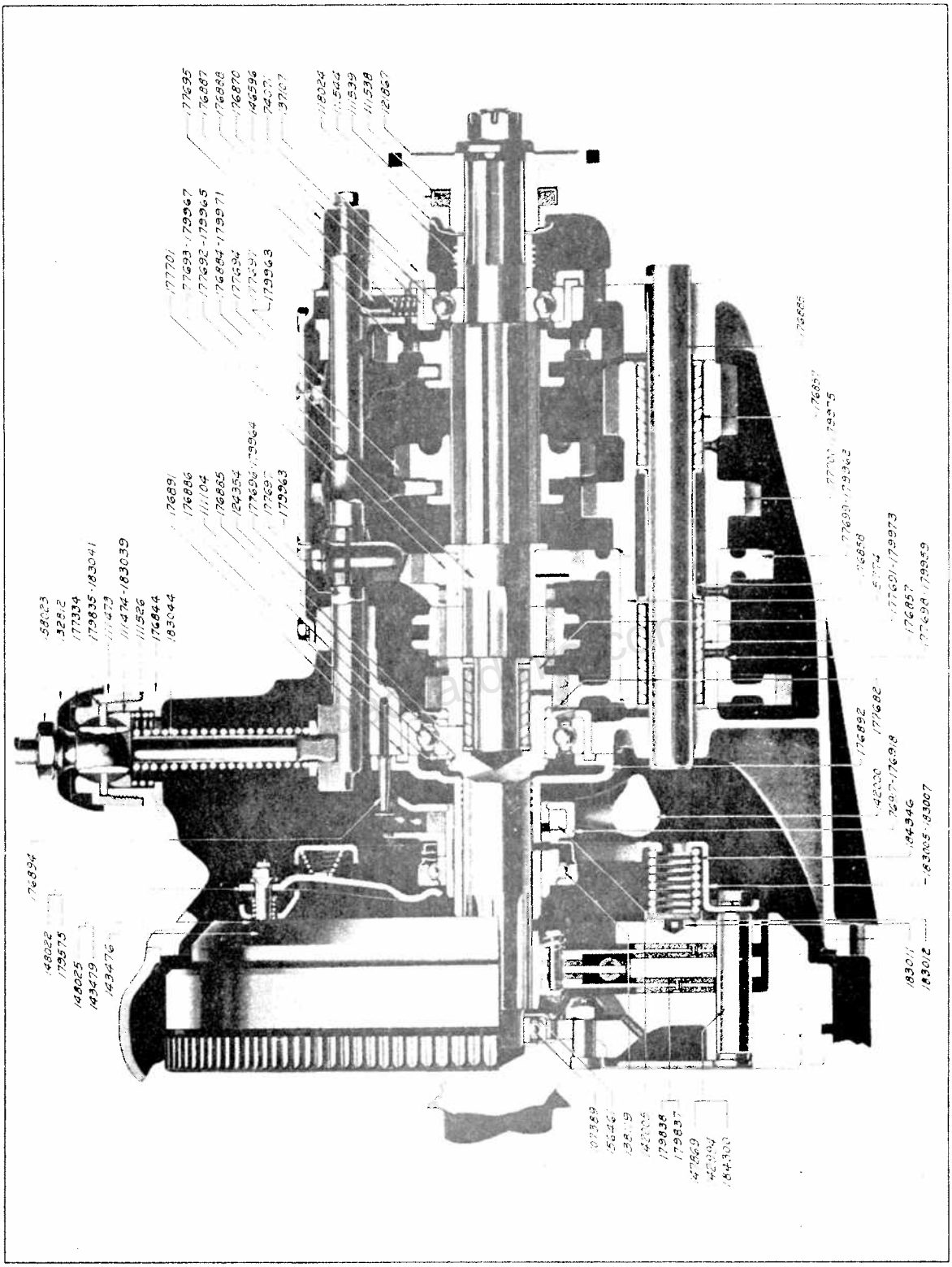

826-833-840-845

Printed in U. S. A.

Piece No.	Name	No. Required 726 733	740 745	826 833	840 845	901 902	903 904
183039	Change speed lever ball socket lower			1	1		
111473	Change speed lever ball socket upper	1	1	1	1		
111526	Change speed lever ball socket spring	1	1	1	1		
186782	Change speed lever cap					1	1
186779	Change speed lever cap retaining screw					2	2
132812	Change speed lever dust cover	1	1	1	1		
158023	Change speed lever dust cover nut	1	1	1	1		
177334	Change speed lever dust cover washer	1	1	1	1		
158127	Change speed lever guide washer (prior to trans. No. 292835 for 726-733 and 184671 for 740-745)	1	1				
179835	Change speed lever guide washer (after trans. No. 292834 for 726-733 and 184670 for 740-745)	1	1				
183041	Change speed lever guide washer			1	1		
186780	Change speed lever pivot pin					1	1
179208	Change speed lever spring and seat assembly	1	1	1	1		
179832	Change speed lever support (when replacing this part on cars prior to trans. No. 292835 for 726-733 and 184671 for 740-745, also order 179835 guide washer)	1	1				
183040	Change speed lever support			1	1		
190442	Change speed lever support					1	1
5533	Screw ($\frac{5}{16}$—24 x $\frac{5}{8}$" flat hd. mach.)	6	6	6	6	6	6
186807	Screw ($\frac{5}{16}$—18 x $\frac{5}{8}$" flat hd. mach.)					6	6
186783	Change speed lever support spring—std.					1	1
197542	Change speed lever support spring—extra heavy					1	1
190984	Washer					1	1
4306	Cotter pin ($\frac{1}{8}$ x 1")					1	1
180027	Clutch shaft and third speed gear assembled (matched) (after trans. No. 283199 for 726-733 and 180699 for 740-745)	1	1				
97942	Clutch shaft and third speed clutch gear assembled			1	1		
177867	Transmission assembly	1	1				
180600	Transmission assembly			1	1		
190655	Transmission assembly					1	1
176843	Transmission case	1	1	1	1		
190412	Transmission case					1	1
7844	Screw ($\frac{3}{8}$—24 x 2$\frac{7}{8}$" hex. hd.)	2	2	2	2		
7841	Screw ($\frac{3}{8}$—24 x 1$\frac{1}{4}$" hex. hd.)	2	2	2	2		
7822	Screw ($\frac{3}{8}$—24 x 1$\frac{1}{2}$" hex. hd.)					4	4
5506	Lockwasher ($\frac{3}{8}$")	4	4	4	4	4	4
176844	Transmission case cover assembly	1	1	1	1		
190439	Transmission case cover assembly					1	1
7806	Screw ($\frac{5}{16}$—24 x $\frac{3}{4}$" hex. hd.)	8	8				
7896	Screw ($\frac{5}{16}$—24 x $\frac{1}{2}$" hex. hd.)			8	8		
5985	Screw ($\frac{5}{16}$—18 x $\frac{1}{2}$" hex. hd.)					8	8
5504	Lockwasher ($\frac{5}{16}$")	8	8	8	8	8	8
176847	Transmission case cover gasket	1	1	1	1		
190437	Transmission case cover gasket					1	1
176848	Transmission case cover liner	1	1	1	1	1	1
176849	Transmission case cover liner reinforcement	1	1	1	1	1	1
4146	Rivet ($\frac{1}{8}$ x $\frac{3}{8}$")	6	6	6	6	6	6
107889	Transmission case oil hole plug	2	2	2	2	2	2
20075	Gasket (1$\frac{1}{4}$" annular)	2	2	2	2	2	2
138086	Transmission case vent hole plug taper pin special	2	2	2	2		
176850	Transmission case tire pump hole cover	1	1	1	1	1	1
176851	Transmission case tire pump hole cover gasket	1	1	1	1	1	1
7804	Screw ($\frac{5}{16}$—18 x $\frac{3}{4}$" hex. hd.)					4	4
5449	Screw ($\frac{5}{16}$—24 x $\frac{3}{4}$" hex. hd.)	4	4	4	4		
5504	Lockwasher ($\frac{5}{16}$")	4	4	4	4	4	4
176855	Transmission countershaft	1	1	1	1		
190394	Transmission countershaft					1	1
5804	Transmission key ($\frac{5}{16}$ x $\frac{3}{16}$ x 3$\frac{1}{4}$" rect.)			1	1		
176857	Transmission countershaft bearing	2	2	2	2	2	2
190402	Transmission countershaft bearing spacer					1	1
177303	Transmission countershaft constant mesh gear (prior to trans. No. 283200 for 726-733 and 180700 for 740-745)	1	1				

packardinfo.com

Piece No.	Name	No. Required 726 733	740 745	826 833	840 845	901 902	903 904
177698	Transmission countershaft constant mesh gear (after trans. No. 283199 for 726-733 and 180699 for 740-745)	1	1	..	..	..	..
179959	Transmission countershaft constant mesh gear	..	..	1	1	..	..
190404	Transmission countershaft constant mesh gear	..	..	..	..	1	1
177307	Transmission countershaft first speed and second speed gear (prior to trans. No. 283200 for 726-733 and 180700 for 740-745)	1	1	..	..	..	..
177700	Transmission countershaft first and second speed gear (after trans. No. 283199 for 726-733 and 180699 for 740-745)	1	1	..	..	..	..
179975	Transmission countershaft first and second speed gear	..	..	1	1	..	..
190400	Transmission countershaft first, second and third speed gears	..	..	..	..	1	1
176858	Transmission countershaft gear bearing spacer	1	1	1	1	..	..
176859	Transmission countershaft pin and reverse gear shaft retainer	1	1	1	1	1	1
7826	Transmission countershaft pin and reverse gear shaft retainer screw ($\frac{5}{16}$—24 x $\frac{5}{8}$" hex. hd.)	1	1	1	1	..	..
5426	Screw ($\frac{5}{16}$ 18 x $\frac{3}{4}$" hex. hd.)	..	..	..	..	1	1
5504	Lockwasher ($\frac{5}{16}$")	1	1	1	1	1	1
177298	Transmission countershaft third speed gear (prior to trans. No. 283200 for 726-733 and 180700 for 740-745)	1	1	..	..	..	..
177699	Transmission countershaft third speed gear (after trans. No. 283199 for 726-733 and 180699 for 740-745)	1	1	..	..	..	..
179962	Transmission countershaft third speed gear	..	..	1	1	..	..
5767	Key ($\frac{5}{16}$ x $\frac{3}{16}$ x 3$\frac{1}{8}$" rectangular) (prior to trans. No. 283200 for 726-733 and 180700 for 740-745)	1	1	..	..	..	..
5774	Key ($\frac{5}{16}$ x $\frac{3}{16}$ x 3$\frac{5}{8}$" rectangular) (after trans. No. 283199 for 726-733 and 180699 for 740-745)	1	1	..	..	..	..
190401	Transmission direct drive and second speed clutch gear	..	..	..	..	1	1
176852	Transmission direct drive and third speed shifter sleeve (prior to trans. No. 283200 for 726-733 and 180700 for 740-745)	1	1	..	..	..	..
177696	Transmission direct drive and third speed gear shifter fork shaft (after trans. No. 283199 for 726-733 and 180699 for 740-745)	1	1	..	..	..	..
176880	Transmission direct drive and third speed shifter sleeve fork (prior to trans. No. 283200 for 726-733 and 180700 for 740-745)	1	1	..	..	..	..
177697	Transmission direct drive and third speed gear shifter fork (after trans. No. 283199 for 726-733 and 180699 for 740-745)	1	1	..	..	..	..
179963	Transmission direct drive and third speed gear shifter fork	..	..	1	1	..	..
190419	Transmission direct drive and third speed gear shifter fork	..	..	..	..	1	1
5762	Screw ($\frac{5}{16}$ 24 x 1$\frac{3}{8}$" hex. hd.)	..	..	..	..	3	3
5504	Lockwasher ($\frac{5}{16}$")	..	..	..	..	3	3
179964	Transmission direct drive and third speed gear shifter fork shaft	..	..	1	1	..	..
190433	Transmission direct drive and third speed gear shifter fork shaft	..	..	..	..	1	1
5761	Transmission direct drive and third speed gear shifter shaft lock plunger ball	..	..	..	..	1	1
195591	Transmission direct drive and third speed gear shifter shaft lock plunger spring	..	..	..	..	1	1
176881	Transmission direct drive and third speed sleeve shifter fork shaft (prior to trans. No. 283200 for 726-733 and 180700 for 740-745)	1	1	..	..	..	..
191074	Transmission driving shaft and third speed gear bushing assembly	..	..	..	..	1	1
176861	Transmission driving shaft (prior to trans. No. 283200 for 726-733 and 180700 for 740-745)	1	1	..	..	..	..
177692	Transmission driving shaft (after trans. No. 283199 for 726-733 and 180699 for 740-745)	1	1	..	..	..	..
179965	Transmission driving shaft	..	..	1	1	..	..
4320	Cotter pin ($\frac{5}{32}$ x 1$\frac{1}{8}$")	1	1	1	1	1	1
127273	Nut ($\frac{3}{4}$" castle)	1	1	1	1	1	1
140079	Washer ($\frac{3}{4}$")	1	1	1	1	1	1
124354	Transmission driving shaft bearing front (Hyatt No. 16949)	1	1	1	1	..	..
190410	Transmission driving shaft bearing front	..	..	..	..	1	1
176863	Transmission driving shaft bearing front spacer	1	1	..	..	1	1
179966	Transmission driving shaft bearing front spacer	..	..	1	1	..	..
74071	Transmission driving shaft bearing rear	1	1	1	1	..	..
191088	Transmission driving shaft bearing rear	..	..	..	..	1	1
111538	Transmission driving shaft bearing rear dust washer	1	1	1	1	1	1
111539	Transmission driving shaft bearing rear dust washer retainer	1	1	1	1	1	1
146596	Transmission driving shaft bearing rear housing	1	1	1	1	1	1
137107	Tfansmission driving shaft bearing rear housing cover	1	1	1	1	1	1
7861	Screw ($\frac{5}{16}$ 24 x 1" hex. hd.)	3	3	3	3	..	..

Printed in U. S. A

Piece No.	Name	No. Required 726 733	740 745	826 833	840 845	901 902	903 904
6115	Stud 5/16 x 18-5/16 x 24 x 1-11/32"	-	-	-	-	3	3
6502	Stud 5/16 x 18-5/16 x 24 x 2-5/16"	-	-	-	-	1	1
7005	Nut 5/16-24	-	-	-	-	4	4
5504	Lockwasher 5/16"	4	4	4	4	4	4
7308	Screw 5/16-25 x 1-15/16" hex. hd.	1	1	1	1	1	1
117994	Transmission driving shaft bearing rear housing cover gasket	1	1	1	1	1	1
111544	Transmission driving shaft bearing rear oil thrower	1	1	1	1	1	1
191086	Transmission driving shaft bearing rear spacer (.0645")	-	-	-	-	-	-
191087	Transmission driving shaft bearing rear spacer (.0665")	-	-	-	-	x	x
191513	Transmission driving shaft bearing rear spacer (.0725")	-	-	-	-	x	x
191514	Transmission driving shaft bearing rear spacer (.0745")	-	-	-	-	x	x
191515	Transmission driving shaft bearing rear spacer (.0765")	-	-	-	-	x	x
191516	Transmission driving shaft bearing rear spacer (.0785")	-	-	-	-	x	x
97837	Transmission driving shaft direct drive clutch gear and third speed clutch gear assembly (prior to trans. No. 283200 for 726-733 and 180700 for 740-745)	1	1	-	-	-	-
179969	Transmission driving shaft direct drive and third speed clutch gear	-	-	1	1	-	-
190401	Transmission driving shaft direct drive and third speed clutch gear	-	-	-	-	1	1
179976	Transmission driving shaft direct drive and third speed clutch gear collar	-	-	1	1	-	-
194215	Transmission driving shaft direct drive and third speed clutch gear and shifter sleeve assembly	-	-	1	1	-	-
176854	Transmission driving shaft first speed gear (prior to trans. No. 283200 for 726-733 and 180700 for 740-745)	1	1	-	-	-	-
177695	Transmission driving shaft first speed gear (after trans. No. 283199 for 726-733 and 180699 for 740-745)	1	1	-	-	-	-
190399	Transmission driving shaft first speed gear	-	-	-	-	1	1
176872	Transmission driving shaft second and reverse speed gears (prior to trans. No. 283200 for 726-733 and 180700 for 740-745)	1	1	-	-	-	-
177694	Transmission driving shaft second and reverse speed gears (after trans. No. 283199 for 726-733 and 180699 for 740-745)	1	1	1	1	-	-
190395	Transmission driving shaft second and reverse speed gear	-	-	-	-	1	1
176860	Transmission driving shaft third speed gear (prior to trans. No. 283200 for 726-733 and 180700 for 740-745)	1	1	-	-	-	-
179967	Transmission driving shaft third speed gear	-	-	1	1	-	-
190418	Transmission driving shaft third speed gear and clutch and cone assembly	-	-	-	-	1	1
176876	Transmission driving shaft third speed gear bearing (prior to trans. No. 283200 for 726-733 and 180700 for 740-745)	1	1	-	-	-	-
179968	Transmission driving shaft third speed gear bearing	-	-	1	1	-	-
176877	Transmission driving shaft third speed gear bearing assembly (prior to trans. No. 283200 for 726-733 and 180700 for 740-745)	1	1	-	-	-	-
190425	Transmission driving shaft third speed gear bushing lock plate	-	-	-	-	1	1
190413	Transmission driving shaft third speed gear bushing washer retaining ring	-	-	-	-	1	1
97943	Transmission driving shaft third speed gear, clutch gear and collar assembly-matched	-	-	1	1	-	-
177693	Transmission driving shaft third speed gear and direct drive gear (after trans. No. 283199 for 726-733 and 180699 for 740-745)	1	1	-	-	-	-
190414	Transmission driving shaft third speed gear retaining ring	-	-	-	-	1	1
121867	Transmission driving shaft universal joint flange	1	1	1	1	1	1
176883	Transmission first speed gear shifter fork shaft assembly	1	1	1	1	-	-
190657	Transmission first speed gear shifter fork shaft assembly	-	-	-	-	1	1
176878	Transmission first speed gear shifter fork (prior to trans. No. 283200 for 726-733 and 180700 for 740-745)	1	1	-	-	-	-
177697	Transmission first speed gear shifter fork (after trans. No. 283199 for 726-733 and 180699 for 740-745)	1	1	-	-	-	-

packardinfo.com

Piece No.	Name	No. Required					
		726 733	740 745	826 833	840 845	801 902	903 904
201367	Transmission clutch shaft bearing rear oil thrower (.246 thick) ..	-	-	-	-	x	x
201368	Transmission clutch shaft bearing rear oil thrower (.248 thick) ..	-	-	-	-	x	x
201369	Transmission clutch shaft bearing rear oil thrower (.250 thick) ..	-	-	-	-	x	x
201370	Transmission clutch shaft bearing rear oil thrower (.252 thick) ..	-	-	-	-	x	x
201371	Transmission clutch shaft bearing rear oil thrower (.254 thick) ..	-	-	-	-	x	x
201372	Transmission clutch shaft bearing rear oil thrower (.256 thick) ..	-	-	-	-	x	x
201354	Transmission clutch shaft bearing rear oil thrower (.220 thick) ..	-	-	-	-	x	x
201355	Transmission clutch shaft bearing rear oil thrower (.222 thick) ..	-	-	-	-	x	x
201356	Transmission clutch shaft bearing rear oil thrower (.224 thick) ..	-	-	-	-	x	x
201357	Transmission clutch shaft bearing rear oil thrower (.226 thick) ..	-	-	-	-	x	x
196675	Transmission clutch shaft bearing rear retaining ring (.086)	-	-	-	-	x	x
196676	Transmission clutch shaft bearing rear retaining ring (.088)	-	-	-	-	x	x
196677	Transmission clutch shaft bearing rear retaining ring (.090)	-	-	-	-	x	x
196681	Transmission clutch shaft bearing rear retaining ring (.092)	-	-	-	-	x	x
196612	Transmission clutch shaft bearing rear retaining ring (.094)	-	-	-	-	x	x
196680	Transmission clutch shaft bearing rear retaining ring (.096)	-	-	-	-	x	x
196679	Transmission clutch shaft bearing rear retaining ring (.098)	-	-	-	-	x	x
196678	Transmission clutch shaft bearing rear retaining ring (.100)	-	-	-	-	x	x
196605	Transmission clutch shifter lever	-	-	-	-	1	1
196610	Transmission clutch shifter lever spring	-	-	-	-	1	1
190245	Transmission clutch shifter lever spring retainer	-	-	-	-	1	1
4310	Cotter pin 1/8 x 1-1/2"	-	-	-	-	1	1
138119	Transmission clutch shifter thrust bearing	-	-	-	-	1	1
196580	Transmission clutch shifter thrust bearing sleeve assem.	-	-	-	-	1	1
196617	Transmission clutch shifter thrust bearing sleeve assem.	-	-	-	-	1	-
142005	Transmission clutch shifter thrust bearing sleeve collar filler ..	-	-	-	-	-	1
176894	Transmission clutch shifter thrust bearing sleeve collar oil extension	-	-	-	-	1	1
203832	Transmission clutch vacuum cylinder bleeder valve body assembly ..	-	-	-	-	1	1
7706	Screw No. 10-32 x 1/2" fill. hd.	-	-	-	-	1	1
5500	Lockwasher No. 10	-	-	-	-	2	2
7003	Nut No. 10-32	-	-	-	-	2	2
203838	Transmission clutch vacuum cylinder bleeder valve body gasket	-	-	-	-	2	2
203837	Transmission clutch vacuum cylinder bleeder valve piston	-	-	-	-	1	1
203873	Transmission clutch vacuum cylinder bleeder valve piston	-	-	-	-	-	1
201324	Transmission countershaft	-	-	-	-	1	-
201381	Transmission countershaft bearing rear	-	-	-	-	1	1
201353	Transmission countershaft bearing rear spacer	-	-	-	-	1	1
201325	Transmission countershaft bushing	-	-	-	-	1	1
201326	Transmission countershaft bushing gasket	-	-	-	-	1	1
7108	Transmission countershaft nut-rear 1/2-20 castle	-	-	-	-	1	1
4291	Cotter pin 3/32 x 3/4"	-	-	-	-	1	1
127273	Transmission countershaft nut-front	-	-	-	-	1	1
201317	Washer-special	-	-	-	-	1	1
4320	Cotter pin 5/32 x 1-1/8	-	-	-	-	1	1
201328	Transmission countershaft bearing-front	-	-	-	-	1	1
201329	Transmission countershaft bearing-front-retaining ring (.0937) ...	-	-	-	-	x	x

Piece No.	Name	No. Required 726 733	740 745	826 833	840 845	901 902	903 904
201330	Transmission countershaft bearing-front-retaining ring (.0947) ...	-	-	-	-	x	x
201331	Transmission countershaft bearing-front-retaining ring (.0957) ...	-	-	-	-	x	x
201332	Transmission countershaft bearing-front-retaining ring (.0967) ...	-	-	-	-	x	x
201347	Transmission countershaft gear cluster	-	-	-	-	1	1
196521	Transmission direct drive and second speed gear shifter fork	-	-	-	-	1	1
5762	Screw 5/16-24 x 1-3/8" hex. hd.	-	-	-	-	1	1
5504	Lockwasher 5/16"	-	-	-	-	1	1
196545	Transmission direct drive and second speed shifter fork shaft (Not used with bleeder valve)	-	-	-	-	1	1
203836	Transmission direct drive and second speed shifter fork shaft (Used with bleeder valve)	-	-	-	-	1	1
196596	Transmission driving shaft	-	-	-	-	1	1
4320	Cotter pin 5/32 x 1-1/8"	-	-	-	-	1	1
127273	Nut-special	-	-	-	-	1	1
140079	Washer-special	-	-	-	-	1	1
201389	Transmission driving shaft bearing front	-	-	-	-	1	1
176865	Transmission driving shaft bearing front spacer	-	-	-	-	1	1
196614	Transmission driving shaft bearing rear	-	-	-	-	1	1
196541	Transmission driving shaft bearing rear cover	-	-	-	-	1	1
196516	Transmission driving shaft bearing rear cover gasket	-	-	-	-	1	1
196551	Stud	-	-	-	-	4	4
5506	Lockwasher 3/8"	-	-	-	-	4	4
7006	Nut 3/8-24	-	-	-	-	4	4
111538	Transmission driving shaft bearing rear dust washer	-	-	-	-	1	1
111539	Transmission driving shaft bearing rear dust washer retainer	-	-	-	-	1	1
111544	Transmission driving shaft bearing rear oil thrower	-	-	-	-	1	1
196682	Transmission driving shaft bearing rear retaining ring (.086)	-	-	-	-	x	x
196683	Transmission driving shaft bearing rear retaining ring (.088)	-	-	-	-	x	x
196684	Transmission driving shaft bearing rear retaining ring (.090)	-	-	-	-	x	x
196685	Transmission driving shaft bearing rear retaining ring (.092)	-	-	-	-	x	x
196615	Transmission driving shaft bearing rear retaining ring (.094)	-	-	-	-	x	x
196686	Transmission driving shaft bearing rear retaining ring (.096)	-	-	-	-	x	x
196687	Transmission driving shaft bearing rear retaining ring (.098)	-	-	-	-	x	x
196688	Transmission driving shaft bearing rear retaining ring (.100)	-	-	-	-	x	x
191086	Transmission driving shaft bearing rear spacer (.0645 thick)	-	-	-	-	x	x
191087	Transmission driving shaft bearing rear spacer (.0665 thick)	-	-	-	-	x	x

packardinfo.com

Piece No.	Name	No. Required 726 733	740 745	826 833	840 845	901 902	903 904
184577	Transmission first speed gear shifter fork	..	..	1	1	..	..
190420	Transmission first speed gear shifter fork	..	..	..	..	1	1
176864	Transmission first speed gear shifter fork shaft stop washer	1	1	1	1	..	..
191560	Transmission first speed gear shifter fork shaft stop washer	..	..	..	..	1	1
7826	Screw ($\frac{5}{16}$ 24 x $\frac{5}{8}$" hex. hd.)	1	1	1	1	2	2
5504	Lockwasher ($\frac{5}{16}$")	1	1	1	1	2	2
5762	Transmission gear shifter fork clamp screw ($\frac{5}{16}$— 24 x $1\frac{3}{8}$" hex. hd. mach.)	3	3	3	3	..	..
5504	Lockwasher ($\frac{5}{16}$")	3	3	3	3	..	..
5761	Transmission gear shifter shaft interlocking ball	2	2	2	2	1	1
176887	Transmission gear shifter shaft lock plunger	3	3	3	3	..	..
190429	Transmission gear shifter shaft lock plunger	..	..	..	..	2	2
185376	Transmission gear shifter shaft lock plunger spring	3	3	3	3	2	2
176889	Transmission gear shifter shaft lock plunger spring retainer	2	2	2	2	..	..
190430	Transmission gear shifter shaft lock plunger spring retainer	..	..	..	..	2	2
176870	Transmission gear shifter shaft stop cover	1	1	1	1	..	..
190427	Transmission gear shifter shaft stop cover	..	..	..	..	1	1
7816	Screw ($\frac{5}{16}$ 24 x $2\frac{1}{2}$" hex. hd. mach.)	2	2	2	2	..	..
190659	Screw ($\frac{5}{16}$ 18 x 3" hex. hd. mach.)	..	..	..	..	2	2
5504	Lockwasher ($\frac{5}{16}$")	2	2	2	2	2	2
176871	Transmission gear shifter shaft stop cover gasket	1	1	1	1	..	..
190428	Transmission gear shifter shaft stop cover gasket	..	..	..	..	1	1
176873	Transmission reversing pinion	1	1	1	1	1	1
176874	Transmission reversing pinion bushing	1	1	1	1	1	1
176875	Transmission reversing pinion pin	1	1	1	1	1	1
176879	Transmission second speed and reverse gear shifter fork (prior to trans. No. 283200 for 726-733 and 180700 for 740-745)	1	1	..	..	..	..
177701	Transmission second speed and reverse gear shifter fork (after trans. No. 283199 for 726-733 and 180699 for 740-745)	1	1	1	1	..	..
190422	Transmission second speed and reverse gear shifter fork	..	..	..	..	1	1
176884	Transmission second speed and reverse gear shifter fork shaft	1	1	..	..	..	..
179971	Transmission second speed and reverse gear shifter fork shaft	..	..	1	1	..	..
190436	Transmission second speed and reverse gear shifter fork shaft	..	..	..	..	1	1
176868	Transmission second speed and reverse gear shifter fork shaft spacer	1	1	..	..	..	..
179972	Transmission second speed and reverse gear shifter fork shaft spacer	..	..	1	1	..	..
195592	Transmission shifter fork shaft packing—cork	..	..	..	..	6	6
195593	Transmission shifter fork shaft packing—rubber	..	..	..	..	3	3
195594	Transmission shifter fork shaft packing retainer	..	..	..	..	3	3
190411	Transmission synchronizer brake and housing assembly	..	..	..	..	2	2
190441	Transmission synchronizer connecting link	..	..	..	..	2	2
190416	Transmission synchronizer operating yoke	..	..	..	..	1	1
186838	Transmission synchronizer operating yoke pin	..	..	..	..	2	2
191507	Transmission synchronizer operating yoke pin retaining ring	..	..	..	..	2	2
190423	Transmission synchronizer operating yoke pivot pin	..	..	..	..	2	2
191562	Transmission synchronizer yoke pivot pin packing	..	..	..	..	2	2
191561	Transmission synchronizer yoke pivot pin packing housing	..	..	..	..	2	2
191505	Transmission synchronizer yoke pivot pin retaining clip	..	..	..	..	2	2
5928	Screw ($\frac{1}{4}$—20 x $\frac{5}{8}$" fill. hd. mach.)	..	..	..	..	2	2
5502	Lockwasher ($\frac{1}{4}$")	..	..	..	..	2	2
186625	Transmission synchronizer plunger assembly	..	..	..	..	2	2
186611	Transmission synchronizer yoke centralizing spring	..	..	..	..	2	2
186615	Transmission synchronizer yoke centralizing spring cap	..	..	..	..	2	2
4294	Cotter pin ($\frac{1}{32}$ x $1\frac{1}{8}$")	..	..	..	..	2	2
190434	Transmission synchronizer yoke centralizing spring screw	..	..	..	..	1	1
5508	Lockwasher ($\frac{7}{16}$")	..	..	..	..	1	1
3883	Washer ($\frac{7}{16}$")	..	..	..	..	1	1

TRUNK AND TRUNK RACK

144738	Trunk and cover assembly—complete (black) (used on 740 and 840)	1	1	1	1	..	..
162555	Trunk assembly (black) (used on 745-845)	..	1	..	1	..	..
163066	Trunk and cover assembly—complete (drab) (used on 745)	..	1	..	..	..	..
148469	Trunk and cover assembly—complete (drab) (used on 740)	1	1	..	..	..	..
144875	Trunk to trunk rack screw	4	4	4	4	..	..
3909	Washer ($\frac{5}{16}$" plain)	4	4	4	4	..	..
164079	Trunk rack assembly (used on 745) (specify color)	..	1	..	..	..	..

Piece No.	Name	No. Required 726 733	740 745	826 833	840 845	901 902	903 904
194248	Trunk rack assembly (used on bodies 501-8-9-511-13-18-19-521-23-31-33-543-4004-7-8-9)	..	..	..	..	1	1
164078	Trunk rack assembly (used on 740)	1	1	1	1	..	..
191410	Trunk rack assembly (used on bodies 500-3-4-5-6-7-510-14-15-16-17-4000-1-2-3-5-6)	..	..	..	..	1	1
163639	Trunk rack brace joint assembly (with 1 1/2" knuckle button)	2	2	..	..	..	..
194251	Trunk rack brace joint assembly (used on 501-8-9-511-13-18-19-521-23-531-33-43-4004-7-8-9)	..	..	..	..	2	2
182308	Trunk rack brace joint assembly (with plain knuckle) (used on 500-3-4-5-6-7-510-14-15-16-17-4000-1-2-3-5-6)	2	2	2	2	2	2
175722	Trunk rack bracket (left) and tail lamp tube assembly (used on 745) (use on body models 420, 424-5) (specify color)	..	1	..	..	..	..
162495	Trunk rack bracket (left) and tail lamp tube assembly (used on 745) (use on body models 421-2-3-6-7-8-9-439-451) (specify color)	..	1	..	..	..	..
175751	Trunk rack bracket—right assembly (used on 745) (used on body models 420-4-5)	..	1	..	..	..	..
162557	Trunk rack bracket—right assembly (used on 745) (used on body models 421-2-3-6-7-8-9-439-451)	..	1	..	..	..	..
171077	Trunk rack bracket gasket (used on 745)	..	2	..	..	..	..
5706	Trunk rack bracket to frame screw (3/8—24 x 1 1/4" hex. hd.) (used on 745) (use on body models 420-4-5)	..	4	..	..	..	..
5590	Trunk rack bracket to frame screw (3/8—24 x 1 1/8" hex. hd.) (used on 745) (use on body models 421-2-3-6-7-8-9-439-451)	..	4	..	..	..	..
5506	Lockwasher (3/8") (used on 745)	..	4	..	..	..	..
162496	Trunk rack bracket pivot pin (used on 745)	..	2	..	..	..	..
158442	Trunk rack bracket support—right (used on 745)	..	1	..	..	..	..
158441	Trunk rack bracket support—left (used on 745)	..	1	..	..	..	..
5506	Trunk rack bracket support to bracket—left lockwasher (3/8") (used on 745)	..	1	..	..	..	..
5506	Trunk rack bracket support to bracket—right lockwasher (3/8") (used on 745)	..	1	..	..	..	..
7819	Trunk rack bracket support to bracket screw (3/8—24 x 1") (used on 745)	..	1	..	..	..	..
5590	Screw (3/8—24 x 1 1/8" hex. hd.) (used on 745)	..	1	..	..	..	..
7006	Nut (3/8"—24) (used on 745)	..	1	..	..	..	..
144799	Trunk rack to bracket lock screw (used on 745-845)	..	2	..	2	..	..
144800	Trunk rack to bracket lock screw plunger (used on 745-845)	..	2	..	2	..	..
191299	Trunk rack emblem	..	..	..	..	1	1
5447	Lockwasher	..	..	..	..	1	1
144767	Trunk rack guard (used on 740)	1	1	..	..	..	..
179213	Trunk rack frame bracket assembly—right (used on 726-733-740) (use with side wheel carrier)	1	1	1	..	..	..
181077	Trunk rack frame bracket assembly—right (use with side wheel carrier)	..	..	..	1	..	..
191644	Trunk rack frame bracket assembly—right (used with bodies 500-3-4-5-6-7-510-14-15-16-17-4000-1-2-3-5-6)	..	..	..	..	1	1
194284	Trunk rack frame bracket assembly—right (used with bodies 501-8-9-511-13-18-19-521-23-31-33-543-4004-7-8-9)	..	..	..	..	1	1
194283	Trunk rack frame bracket assembly—left (used with bodies 501-8-9-511-13-18-19-521-23-31-33-543-4004-7-8-9)	..	..	..	..	1	1
179212	Trunk rack frame bracket assembly—left (used on 726-733 and 740) (use with side wheel carrier)	1	1	1	..	..	..
181076	Trunk rack frame bracket assembly—left (use with side wheel carrier)	..	..	..	1	..	..
191643	Trunk rack frame bracket assembly—left (used with bodies 500-3-4-6-7-510-14-15-16-17-4000-1-2-3-5-6)	..	..	..	..	1	1
5706	Bolt (used on 726-733-740) (use with side wheel carrier)	4	4	4	..	2	2
5506	Lockwasher (3/8") (used on 726-733-740) (use with side wheel carrier)	4	4	..	..	2	2
7006	Nut (3/8"—24) (used on 726-733-740) (use with side wheel carrier)	4	4	4	..	2	2
144770	Trunk rack frame bracket pivot pin (used on 726-733-740) (use with side wheel carrier)	2	2	2	2	2	2
144783	Trunk rack guard pivot pin (used on 726-733-740) (use with trunk rack guard)	2	2	..	..	..	..
7006	Nut (3/8"—24 plain) (used on 726-733-740)	2	2	..	..	..	..
5665	Blind nut (5/16") (used on 726-733-740)	2	2	2	2	2	2
5506	Lockwasher (3/8") (used on 726-733-740)	2	2	..	..	..	..
5504	Lockwasher (5/16") (used on 726-733-740)	2	2	2	2	2	2
3874	Plain washer (5/16" plain) (used on 726-733-740)	2	2	2	2	2	2
144799	Trunk rack to trunk rack frame bracket lock screw (used on 726-733-740)	2	2	2	2	2	2

Printed in U. S. A.

Piece No.	Name	No. Required 726 733	740 745	826 833	840 845	901 902	903 904
144800	Screw plunger (used on 726-733-740)	2	2	2	2	2	2
162497	Trunk rack pivot pin—long (used on 745)		2				
144782	Trunk rack pivot pin—long (used on 740) (used with bodies 500-3-4-5-6-7-510-14-15-16-17—4000-1-2-3-5-6)	2	2	2	2	2	2
194250	Trunk rack pivot pin—long (used with bodies 501-8-9-11-13-18-19-521-23-531-33-543—4004-7-8-9)					2	2
169155	Trunk rack pivot pin—short (used on 745)		2				
144770	Trunk rack pivot pin—short (used on 740)	2	2	2	2	2	2
5665	Blind nut ($\frac{5}{16}$")	4	4	4	4	4	4
3874	Washer ($\frac{5}{16}$" plain)	4	4	4	4	4	4
5504	Lockwasher ($\frac{5}{16}$")	4	4	4	4	4	4
148448	Trunk rack support screw assembly (used on 745)		2				
184998	Trunk rack support screw assembly (2 $\frac{5}{32}$" long)			2	2		
173366	Trunk rack support screw assembly (1 $\frac{15}{32}$" long) (used on 726-733-740)	2	2	2	2		
7006	Nut ($\frac{3}{8}$"—24 plain)	2	2	2	2		
164083	Trunk rack trim stick (used on 745)		6				
191403	Trunk rack trim stick—upper					1	1
144802	Trunk rack trim stick (used on 740)		6	5	5		
191404	Trunk rack trim stick—lower					4	4
163613	Tee-bolt (used on 726-733-740)	15	15	15	15		
163613	Tee-bolt (used on 745)		24				
144789	Nut (used on 726-733-740)	15	15	15	15		
5925	Screw ($\frac{1}{4}$"—20 x $\frac{15}{32}$" flat hd.)					4	4
5924	Screw ($\frac{1}{4}$"—20 x $\frac{3}{8}$" flat hd.)					16	16
178809	Nut (used on 745) (specify color)		24				
172054	Trunk rack trim stick filler gasket (used on 745)		4				

UNIVERSAL JOINT

176908	Universal joint shaft assembly (used on 726-826)	1		1			
191664	Universal joint shaft assembly (used on 901)					1	
176909	Universal joint shaft assembly (used on 745 custom and 845)		1		1		
194203	Universal joint shaft assembly (used on 904)						1
176898	Universal joint shaft assembly (used on 733-740-745-833-840)	1	1	1	1		
194204	Universal joint shaft assembly (used on 902-903)					1	1
140065	Universal joint shaft flange bolt ($\frac{5}{16}$"—24 x 1" hex. hd.)	12	12	12	12	12	12
5004	Lockwasher ($\frac{5}{16}$")	12	12	12	12	12	12
7005	Nut ($\frac{5}{16}$"—24 plain)	12	12	12	12	12	12
176768	Universal joint shaft (used on 733-740-745-833-840)	1	1	1	1		
176983	Universal joint shaft (used on 745 custom and 845)		1		1		
176769	Universal joint shaft (used on 726-826)	1		1			
194463	Universal joint shaft (used on 901)					1	
194460	Unviersal joint shaft—front (used on 902-903)					1	1
194461	Universal joint shaft—front (used on 904)						1
194462	Universal joint shaft—rear (used on 902-903-904)					1	1
186192	Universal joint shaft intermediate bearing (models 902-903-904 only)					1	1
147381	Universal joint shaft intermediate bearing drip plug adapter (models 902-903-904)					1	1
111538	Universal joint shaft intermediate bearing dust washer (models 902-903-904 only)					1	1
194795	Universal joint shaft intermediate bearing housing and support assembly (models 902-903-904 only)					1	1
194189	Universal joint shaft intermediate bearing housing (models 902-903-904 only)					1	1
194195	Universal joint shaft intermediate bearing housing cover (models 902-903-904 only)					1	1
7824	Bolt ($\frac{1}{4}$"—28 x $\frac{5}{8}$" SAE std.) (models 902-903-904 only)					6	6
5502	Lockwasher ($\frac{1}{4}$" std.) (models 902-903-904 only)					6	6
194202	Universal joint shaft intermediate bearing housing cover gasket (models 902-903-904 only)					1	1

packard-info.com

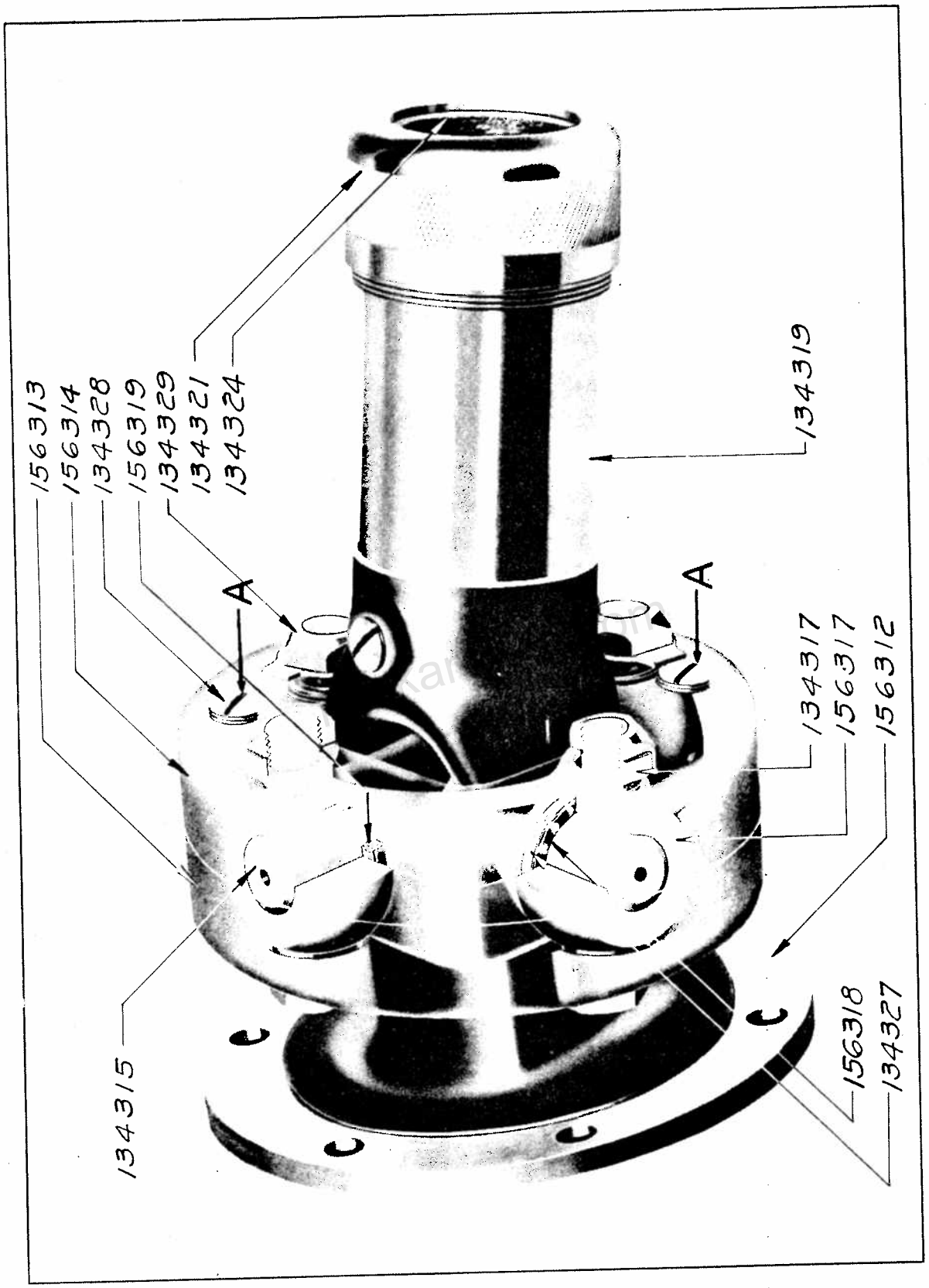

726-733-740-745
826-833-840-845

Printed in U. S. A.

Piece No.	Name	No. Required 726 733	740 745	826 833	840 845	901 902	903 904
194197	Universal joint shaft intermediate bearing housing cover washer (models 902-903-904)	-	-	-	-	1	1
194201	Universal joint shaft intermediate bearing housing cover washer retainer (models 902-903-904)	-	-	-	-	1	1
194202	Universal joint shaft intermediate bearing housing cover washer retainer gasket (models 902-903-904 only)	-	-	-	-	1	1
194190	Universal joint shaft intermediate bearing housing dust shield-front (models 902-903-904 only)	-	-	-	-	1	1
194191	Universal joint shaft intermediate bearing housing dust shield-front clamp (models 902-903-904 only)	-	-	-	-	1	1
5667	Screw No. 10-32 x 5/8" rnd. hd. (models 902-903-904 only)	-	-	-	-	1	1
7003	Nut No. 10-32 (models 902-903-904 only)	-	-	-	-	1	1
550	Lockwasher No. 10 (models 902-903-904 only)	-	-	-	-	1	1
194784	Universal joint shaft intermediate bearing housing dust shield-rear (models 902-903-904 only)	-	-	-	-	1	1
194785	Universal joint shaft intermediate bearing housing oil seal retainer (models 902-903-904)	-	-	-	-	x	x
194794	Universal joint shaft intermediate bearing housing oil seal retainer washer (models 902-903-904)	-	-	-	-	x	x
7809	Universal joint shaft intermediate bearing housing support-screw 5/16-24 x 7/8" hex. hd. (models 902-903-904 only)	-	-	-	-	8	8
7005	Nut 5/16-24 plain (models 902-903-904 only)	-	-	-	-	8	8
5504	Lockwasher 5/16" std. (models 902-903-904 only)	-	-	-	-	8	8
194546	Universal joint shaft intermediate bearing housing support shim-thick	-	-	-	-	x	x
194545	Universal joint shaft intermediate bearing housing support shim-thin	-	-	-	-	x	x
194194	Universal joint shaft intermediate bearing oil seal (models 902-903-904 only)	-	-	-	-	2	2
194196	Universal joint shaft intermediate bearing retaining nut (models 902-903-904 only)	-	-	-	-	1	1
194193	Universal joint shaft intermediate bearing retaining nut lock (models 902-903-904 only)	-	-	-	-	1	1
194786	Universal joint shaft intermediate bearing spacer (models 902-903-904 only)	-	-	-	-	1	1
134327	Universal joint cork washer	8	8	8	8	8	12
134312	Universal joint dust plug	1	1	1	1	1	1
134324	Universal joint felt washer	1	1	1	1	1	1
134321	Universal joint felt retainer	1	1	1	1	1	1
134323	Universal joint felt retainer washer	2	2	2	2	2	2
156312	Universal joint flange yoke	2	2	2	2	1	1
205036	Universal joint flange yoke-rear	-	-	-	-	1	1
134318	Universal joint flange yoke dowel	2	2	2	2	2	2
134315	Universal joint flange yoke pin	2	2	2	2	2	2
156319	Universal joint ferrule	8	8	8	8	8	12
134329	Universal joint hex. nut	16	16	16	16	16	24
156313	Universal joint housing-plain	2	2	2	2	2	3
156314	Universal joint housing-with oil holes	2	2	2	2	2	3
134317	Universal joint lock plate	8	8	8	8	8	12
134328	Universal joint oil hole plug	5	5	5	5	5	8
179817	Universal joint sleeve yoke assembly	1	1	1	1	1	1
134319	Universal joint sleeve yoke	1	1	1	1	1	1
205035	Universal joint splined yoke	-	-	-	-	2	2
156317	Universal joint trunnion bearing	8	8	8	8	8	12
156318	Universal joint trunnion spring washer	8	8	8	8	8	12

WHEELS

178047	Wire wheel changeover equipment	1	-	-	-	-	-
185110	Wire wheel changeover equipment	-	-	1	-	1	-
178048	Wire wheel changeover equipment (used on 740)	-	1	-	-	-	-
185160	Wire wheel changeover equipment	-	-	-	1	-	1
178049	Wire wheel changeover equipment (used on 745)	-	1	-	-	-	-
178050	Wood wheel changeover equipment	1	-	-	-	-	-
185161	Wood wheel changeover equipment	-	-	1	-	1	-
178051	Wood wheel changeover equipment (used on 740)	-	1	-	1	-	1
178052	Wood wheel changeover equipment (used on 745)	-	1	-	-	-	-

Revised November, 1932

Printed in U.S.A.

Piece No.	Name	No. Required 726 733	740 745	826 833	840 845	901 902	908 904
172070	Wire wheel hub shell cover 5-1/16" dia.	5	-	-	-	-	-
177323	Wire wheel hub shell cover assembly-6-1/2" dia.	5	-	-	-	-	-
166331	Wire wheel hub shell cover 6-1/16" dia.	-	6	-	-	-	-
177320	Wire wheel hub shell cover assembly 7-1/2" dia.	-	6	-	-	-	-
98229	Wheel assembly-disc- (20 x 4-1/2" base)	5	-	-	-	-	-
98247	Wheel assembly-disc- (19 x 4-1/2" base)	-	-	5	-	5	-
98230	Wheel assembly-disc- (19 x 5" base)	-	6	-	5	-	5
98235	Wheel assembly-wood- (20 x 4-1/2" base)	5	-	-	-	-	-
98248	Wheel assembly-wood- (19 x 4-1/2" base)	-	-	5	-	5	-
98236	Wheel assembly-wood- (19 x 5" base)	-	6	-	5	-	5
98231	Wheel assembly-wire- (20 x 4-1/2" base) (used with 5-1/16" dia. hub shell cover)	5	-	-	-	-	-
98237	Wheel assembly-wire- (20 x 4-1/2" base) (used with 6-1/2" dia. hub shell cover)	5	-	-	-	-	-
98241	Wheel assembly-wire- (19 x 4-1/2" base)	-	-	5	-	5	-
98233	Wheel assembly-wire- (19 x 5" base) (used with 6-1/16" dia. hub shell cover)	-	6	-	-	-	-
98239	Wheel assembly-wire- (19 x 5" base) (used with 7-1/2" dia. hub shell cover)	-	6	-	-	-	-
98244	Wheel assembly-wire- (19 x 5" base)	-	-	-	5	-	5
98232	Wheel assembly-wire- (chromium plate) (used with 5-1/16" dia. hub shell cover)	5	-	-	-	-	-
98238	Wheel assembly-wire- (chromium plate) (used with 6-1/2" dia. hub shell cover)	5	-	-	-	-	-
98243	Wheel assembly-wire- (chromium plate)	-	-	5	-	5	-
98234	Wheel assembly-wire- (chromium plate) (used with 6-1/16" dia. hub shell cover)	-	6	-	-	-	-
98240	Wheel assembly-wire- (chromium plate) (used with 7-1/2" dia. hub shell cover)	-	6	-	-	-	-
98246	Wheel assembly-wire- (chromium plate)	-	-	-	5	-	5
98242	Wheel assembly-wire- (19 x 4-1/2" base) (chromium plated hub, painted spokes, nipples and rim)	-	-	5	-	5	-
98245	Wheel assembly-wire- (19 x 5" base) (chromium plated hub, painted spokes, nipples and rim)	-	-	-	5	-	5
146106	Wheel bolt-disc.	28	-	28	-	28	-
146788	Wheel bolt-disc.	-	32	-	32	-	32
173187	Wheel bolt-wood	28	35	28	32	28	32
146108	Wheel bolt-wire	28	35	-	-	-	-
181828	Wheel bolt-wire	-	-	28	32	28	32
170266	Wheel brake drum inspection hole cover	4	-	4	-	4	-
163200	Wheel brake drum inspection hole cover	-	4	-	4	-	4
5483	Screw 1/4-20 x 5/16"	4	4	4	4	4	4
5502	Lockwasher 1/4"	4	4	4	4	4	4
181405	Wheel hub adapter-front-wood	-	-	2	-	2	-
~~173179~~	Wheel hub adapter-front-wood 181405	2	-	-	-	-	-
180943	Wheel hub adapter-front-disc	-	-	2	-	2	-
181406	Wheel hub adapter-rear	-	-	2	-	2	-
181404	Wheel hub adapter	-	-	-	4	-	4
173173	Wheel hub adapter-rear-wood	2	-	-	-	-	-
180944	Wheel hub adapter-rear-disc	-	-	2	-	2	-
163632	Wheel hub adapter-wood	-	4	-	-	-	-
180945	Wheel hub adapter-disc	-	-	-	4	-	4
114388	Wheel hub cap-front-disc and wood	2	-	-	-	-	-
180928	Wheel hub cap-front-disc and wood	-	-	2	-	2	-
170247	Wheel hub cap-rear-disc and wood	2	-	-	-	-	-
180927	Wheel hub cap-rear-disc	-	-	2	-	2	-
172094	Wheel hub cap-disc and wood	-	4	-	-	-	-
180929	Wheel hub cap-disc and wood	-	-	-	4	-	4
173354	Wheel hub cap-front-wire	2	-	-	-	-	-
181438	Wheel hub cap-front-wire	-	-	2	2	2	2
173355	Wheel hub cap-rear-wire	2	-	-	-	-	-
166329	Wheel hub cap-wire	-	4	-	-	-	-
166328	Wheel hub cap seal-wire	4	4	-	-	-	-
166324	Wheel hub cap seal retainer-wire	4	4	-	-	-	-
170252	Wheel hub and drum assembly-front	2	-	-	-	-	-
180934	Wheel hub and drum assembly-front	-	-	2	-	2	-
163029	Wheel hub and drum assembly-front	-	2	-	-	-	-
180935	Wheel hub and drum assembly-front	-	-	-	2	-	2
170253	Wheel hub and drum assembly-rear	2	-	-	-	-	-
180936	Wheel hub and drum assembly-rear	-	-	2	-	2	-

packardinfo.com

Piece No.	Name	No. Required 726 733	740 745	826 833	840 845	901 902	903 904
182143	Wheel rim flange ring (19 x 5″ base) (disc)	..	..	5	..	5	..
172076	Wheel rim flange ring (19 x 5″ base) (disc, wood and wire)	..	6	5	5	5	5
163609	Wheel rim flange ring (20 x 4½″ base) (wood, wire)	5	..	..	..	..	..
175444	Wheel spokes—long (wire) (chromium plate)	..	x	..	..	..	..
97991	Wheel spokes—long (wire) (carbon steel)	..	x	..	..	..	..
181772	Wheel spokes—long (wire) (chromium plate)	..	..	..	x	..	x
195931	Wheel spokes—long (wire) (carbon steel)	..	..	..	x	..	x
175365	Wheel spokes—long (wire) (chromium plate)	x	..	..	..	..	..
97988	Wheel spokes—long (wire) (carbon steel)	x	..	..	..	..	..
181781	Wheel spokes—long (wire) (chromium plate)	..	..	x	..	x	..
195936	Wheel spokes—long (wire) (carbon steel)	..	..	x	..	x	..
175445	Wheel spokes—short (wire) (chromium plate)	..	x	..	..	..	..
97992	Wheel spokes—short (wire) (carbon steel)	..	x	..	..	..	..
181773	Wheel spokes—short (wire) (chromium plate)	..	..	..	x	..	x
195932	Wheel spokes—short (wire) (carbon steel)	..	..	..	x	..	x
175363	Wheel spokes—short (wire) (chromium plate)	x	..	..	..	..	..
97989	Wheel spokes—short (wire) (carbon steel)	x	..	..	..	..	..
181782	Wheel spokes—short (wire) (chromium plate)	..	..	x	..	x	..
195937	Wheel spokes—short (wire) (carbon steel)	..	..	x	..	x	..
175362	Wheel spokes nipple (wire) (chromium plate)	x	x	..	..	..	..
195933	Wheel spokes nipple (wire) (use with carbon steel spokes)	..	..	x	x	x	x
181774	Wheel spokes nipple (wire) (chromium plate)	..	..	x	x	x	x
97990	Wheel spokes nipple (wire) (use with carbon steel spokes)	x	x	..	..	..	..
184343	Wheel wrench (wire)	1	1	1	1	..	..

WHEEL CARRIER

175925	Rear wheel carrier bracket (used on 726-733-740) (used on body models 400-3-4-5-7-410-14-15-17)	1	1	..	..	..	..
177327	Rear wheel carrier bracket (used on 726-733-740) (used on body models 401-2-6-8-9-411-12-13-16-18-19-431-441)	1	1	..	..	..	..
5810	Rear wheel carrier bracket to frame rear end cross channel bolt (⅜—24 x 1¼″ hex. head)	..	..	..	2	..	..
5980	Bolt (7/16″—20 x 1 5/16″ hex. hd.)	..	..	..	..	2	2
7106	Nut (⅜″—24 castle)	..	..	..	2	..	..
7107	Nut (7/16″—20 castle)	..	..	..	..	2	2
5506	Lockwasher (⅜″)	..	..	..	2	..	..
5508	Lockwasher (7/16″)	..	..	..	..	2	2
4290	Cotter pin (8/32 x ⅝″)	..	..	..	2	..	..
4291	Cotter pin (3/32 x ¾″)	..	..	..	..	2	2
194833	Washer (7/16″)	..	..	..	..	2	2
175930	Rear wheel carrier bracket to frame rear end cross tube bolt (used on 740)	2	2	2	..	..	..
7006	Nut (⅜″—24 plain) (used on 740)	2	2	2	..	..	..
5506	Lockwasher (⅜″) (used on 740)	2	2	2	..	..	..
3877	Washer (⅜″ plain) (used on 740)	2	2	2	..	..	..
167453	Rear wheel carrier bracket assembly (used on 745) (single wheel carrier) (specify color)	..	1	..	..	..	..
164720	Rear wheel carrier bracket (used on 745) (double wheel carrier) (specify color)	..	1	..	..	..	..
176745	Rear wheel carrier bracket (used with double wheel carrier only)	1	..	1	..	..	..
194091	Rear wheel carrier bracket (used with double wheel carrier only)	..	..	..	..	1	..
176744	Rear wheel carrier bracket (used with double carrier only) (used on 740)	..	1	..	..	..	..
181841	Rear wheel carrier bracket (used with double carrier only)	..	..	..	1	..	..
194092	Rear wheel carrier bracket (used with double carrier only)	..	..	..	..	..	1
173557	Rear wheel carrier bracket brace (used on 726-733-740) (used on body models 400-3-4-5-7-410-14-15-17-460-3-4-5-7)	1	1	1	..	..	..
180924	Rear wheel carrier bracket brace	..	..	..	1	..	..
195910	Rear wheel carrier bracket brace	..	..	..	..	1	1
177329	Rear wheel carrier bracket brace (used on 726-733-740) (used on body models 401-2-6-8-9-411-12-13-16-18-19-431-441-461-2-6-8-9)	1	1	1	..	..	..
172194	Rear wheel carrier bracket brace—right (used with double wheel carrier only) (used on 740)	1	1	1	..	..	..
181836	Rear wheel carrier bracket brace—right (used with double wheel carrier only)	..	..	..	1	..	..
194088	Rear wheel carrier bracket brace—right (used with double wheel carrier only)	..	..	..	..	1	1

Piece No.	Name	No. Required 726 733	740 745	826 833	840 845	901 902	903 904
172193	Rear wheel carrier bracket brace left (used with double wheel carrier only) (used on 740)	1	1	1	. .	. .	. .
181835	Rear wheel carrier bracket brace—left (used with double wheel carrier only)	. .	. .	. .	1	. .	. .
194087	Rear wheel carrier bracket brace left (used with double wheel carrier only)	. .	. .	. .	. .	1	1
7010	Nut (5/8"—18) (used on 740)	3	3	3	3	1	1
196847	Nut (5/8" 11 thd.)	. .	. .	. .	. .	1	1
7010	Nut (5/8"—18) (used on 740) (double wheel carrier)	8	8	5	5	8	8
5514	Lockwasher (5/8") (used on 740)	2	2	2	4	2	2
5514	Lockwasher (5/8") (used on 740) (double wheel carrier)	8	8	6	4	4	4
163855	Rear wheel carrier bracket brace assembly (used on 745) (double or single wheel carrier) (specify color)	. .	1	. .	. .	. .	. .
163859	Rear wheel carrier bracket brace to frame spacer (used on 745) (double or single wheel carrier)	. .	2	. .	. .	. .	. .

packardinfo.com

Printed in U. S. A.

Piece No.	Name	No. Required 726 733	740 745	826 833	840 845	901 902	903 904
5595	Rear wheel carrier bracket brace to frame bolt (3/8—24 x 2 1/16") (used on 745) (double or single wheel carrier)		2				
7006	Nut (3/8"—24 plain) (used on 745) (double or single wheel carrier)		2				
5506	Lockwasher (3/8") (used on 745) (double or single wheel carrier)		2				
163860	Taper washer (used on 745) (double or single wheel carrier)		2				
5590	Rear wheel carrier bracket brace to spacer screw (3/8—24 x 1 1/8" hex. hd.) (used on 740) (double or single wheel carrier)		2				
5506	Lockwasher (3/8") (used on 745) (double or single wheel carrier)		2				
7819	Rear wheel carrier bracket brace to frame spacer to frame bolt (3/8—24 x 1" hex. hd.) (used on 745) (double or single wheel carrier)		2				
7006	Nut (3/8"—24 plain) (used on 745) (double or single wheel carrier)		2				
5506	Lockwasher (3/8") (used on 745) (double or single wheel carrier)		2				
5592	Rear wheel carrier bracket brace yoke screw (5/8—18 x 1 5/8" hex. hd.) (used on 745) (double or single wheel carrier)		1				
181873	Rear wheel carrier bracket bolt (double wheel carrier)				2	2	2
175941	Rear wheel carrier bracket brace shroud (double wheel carrier)	1		1			
5771	Screw (No. 10—32 x 3/8" rnd. hd. mach.) (double wheel carrier)	2		2			
7003	Nut (No. 10—32) (double wheel carrier)	4		4			
5500	Lockwasher (No. 10) (double wheel carrier)	2		2			
176759	Rear wheel carrier bracket (double) to frame rear end cross tube bolt (double wheel carrier)	2		2			
180914	Rear wheel carrier bracket frame cross channel assembly				1		
5811	Rear wheel carrier bracket frame cross channel brace to cross tube bolt screw (3/8—24 x 2 11/16" hex. hd.)				2		
5506	Lockwasher (3/8")				2		
7106	Nut (3/8"—24 castle)				2		
4290	Cotter pin (3/32 x 5/8")				2		
180948	Rear wheel carrier bracket frame cross channel screw				2		
180827	Rear wheel carrier bracket frame cross channel spacer				2		
180949	Rear wheel carrier bracket liner				1	1	1
180911	Rear wheel carrier bracket and support plate assembly				1		
190097	Rear wheel carrier bracket and support plate assembly					1	1
146316	Rear wheel carrier bracket pin (used on 745) (double or single wheel carrier)		2	2	2		
4019	Rear wheel carrier bracket pin (3/8 x 13/16") (used on 745) (double wheel carrier)		1		1		
175923	Rear wheel carrier bracket and support plate assembly (used on 740) (used on body models 400-3-4-5-7-410-14-15-17-460-3-4-5-7)	1	1	1			
177328	Rear wheel carrier bracket and support plate assembly (used on 740) (used on body models 401-2-6-8-9-411-12-13-16-18-19-431-441-461-462-6-8-9-481)	1	1	1			
169563	Rear wheel carrier lock	1	1				
182479	Rear wheel carrier lock			1	1	1	1
169564	Rear wheel carrier lock retainer	1	1	1	1	1	1
173182	Rear wheel carrier lock plate assembly (wire) (use with 5 1/2" dia. hub shell cover)	1					
177704	Rear wheel carrier lock plate assembly (wire) (use with 6 1/16" dia. hub shell cover)	1					
181054	Rear wheel carrier lock plate and retainer assembly (wire)			1		1	
169565	Rear wheel carrier lock plate assembly (wire) (use with 6 1/16" dia. hub shell cover)		1				
177690	Rear wheel carrier lock plate assembly (wire) (use with 7 1/2" dia. hub shell cover)		1				
181055	Rear wheel carrier lock plate and retainer assembly (wire)				1		1
170187	Rear wheel carrier lock plate and retainer assembly (disc)	1		1		1	
177877	Rear wheel carrier lock plate and retainer assembly (wood)	1		1		1	
169567	Rear wheel carrier lock plate and retainer assembly (wood and disc)		1		1		1
156455	Rear wheel carrier lock plate nut (wire) (use with 5 1/16" and 6 1/16" dia. hub shell covers)	1	1				
177687	Rear wheel carrier lock plate nut (wire) (use with 6 1/2" and 7 1/2" dia. hub shell covers)	1	1				
177922	Rear wheel carrier lock plate nut (wood) (5/8" 18 thd.)	1		1		1	
195944	Rear wheel carrier lock plate nut (wood) (5/8" 11 thd.)					1	
156451	Rear wheel carrier lock plate nut (wood) (5/8" 18 thd.)		1		1	1	1
195906	Rear wheel carrier lock plate nut (wood) (5/8" 11 thd.)						1
156450	Rear wheel carrier lock plate nut (disc and wire) (5/8" 18 thd.)	1	1	1	1	1	1
195909	Rear wheel carrier lock plate nut (disc and wire) (5/8" 11 thd.)					1	1
148846	Rear wheel carrier lock plate nut retainer	1	1	1	1	1	1
173181	Rear wheel carrier lock plate cushion (wire) (use with 5 1/16" dia. hub shell cover)	1					
166322	Rear wheel carrier lock plate cushion (wire) (use with 6 1/16" dia. hub shell cover)		1				
177685	Rear wheel carrier lock plate cushion (wire) (use with 6 1/2" dia. hub shell cover)	1					

classicdriveline.com

Piece No.	Name	No. Required 726 733	740 745	826 833	840 845	901 902	903 904
177684	Rear wheel carrier lock plate cushion (wire) (use with 7½" dia. hub shell cover)	..	1	..	..	..	..
146322	Rear wheel carrier lock plate retainer (wire)	..	1	..	..	..	..
173350	Rear wheel carrier lock plate retainer (wire)	1	..	..	..	..	..
146316	Rear wheel carrier pin (double wheel carrier) (used on 740)	2	2	..	..	2	2
146316	Rear wheel carrier pin (single wheel carrier)	..	..	..	..	2	2
5510	Lockwasher (½")	..	..	..	..	2	2
7008	Nut (½"—20)	..	..	..	..	2	2
146317	Rear wheel carrier pin (double wheel carrier) (wood and wire)	2	2	2	2	4	4
7008	Rear wheel carrier pin nut (½"—20 plain) (double wheel carrier) (used on 749)	2	2	..	..	2	2
146788	Rear wheel carrier screw (double wheel carrier) (used on 740-840)	3	3	3	3	..	..
164722	Rear wheel carrier spacer assembly (used with double wheel carrier only) (used on 745) (specify color)	..	1	..	1	..	..
172993	Rear wheel carrier spacer (double wheel carrier)	1	..	1	..	..	..
194093	Rear wheel carrier spacer assembly (double wheel carrier)	..	..	..	..	..	1
172192	Rear wheel carrier spacer (double wheel carrier) (used on 740)	..	1	..	..	..	..
194094	Rear wheel carrier spacer assembly (double wheel carrier)	..	..	..	..	1	..
146316	Rear wheel carrier spacer pin (used on 740) (double wheel carrier)	..	2	..	2	..	..
7008	Nut (½"—20 plain) (used on 745) (double wheel carrier)	..	2	..	2	..	..
156660	Rear wheel carrier space tie rod (used with double wheel carrier only) (used on 740)	1	1	1	..	..	..
164724	Rear wheel carrier space tie rod (used with double wheel carrier only) (used on 745)	..	1	..	..	1	1
7010	Nut (⅝"—18 plain) (used with double wheel carrier)	2	2	2	2	2	2
5514	Lockwasher (⅝") (used with double wheel carrier only)	2	2	2	2	2	2
146316	Rear wheel carrier support plate pin (disc) (used on 745)	2	2	2	2	..	..
146317	Rear wheel carrier support plate pin (wood and wire)	2	2	2	2	..	..
5510	Lockwasher (½")	2	2	2	2	..	..
7008	Nut (½"—20 plain)	2	2	2	2	..	..
173551	Side wheel carrier bracket—left assembly	1	..	1	..	..	..
191652	Side wheel carrier bracket—left assembly (prior to frame No. 344176)	..	..	..	..	1	..
194759	Side wheel carrier bracket—left assembly (after frame No. 344175)	..	..	..	..	1	..
175380	Side wheel carrier bracket—left assembly (used on 745) (specify color)	..	1	..	..	..	..
176756	Side wheel carrier bracket—left assembly (used on 745 custom) (specify color)	..	1	..	1	..	..
191487	Side wheel carrier bracket—left assembly (prior to frame No. 193788)	..	..	..	..	..	1
194687	Side wheel carrier bracket—left assembly (after frame No. 193787)	..	..	..	..	..	1
173546	Side wheel carrier bracket—left assembly (used on 740)	..	1	..	..	..	..
173550	Side wheel carrier bracket—right assembly	1	..	1	..	..	..
191653	Side wheel carrier bracket—right assembly (prior to frame No. 344176)	..	..	..	..	1	..
194760	Side wheel carrier bracket—right assembly (after frame No. 344175)	..	..	..	..	1	..
175379	Side wheel carrier bracket—right assembly (used on 745) (specify color)	..	1	..	..	..	..
176757	Side wheel carrier bracket—right assembly (used on 745 custom) (specify color)	..	1	..	1	..	..
191488	Side wheel carrier bracket—right assembly (prior to frame No. 193788)	..	..	..	..	..	1
194686	Side wheel carrier bracket—right assembly (after frame No. 193787)	..	..	..	..	..	1
173547	Side wheel carrier bracket—right assembly (used on 740)	..	1	..	..	..	..
144564	Side wheel carrier bracket bolt—long (used on 740)	4	4	4	..	..	..
144576	Side wheel carrier bracket bolt—short (used on 740)	4	4	..	..	..	..
175293	Side wheel carrier bracket bolt (used on 745)	..	6	4	..	..	..
178737	Side wheel carrier bracket bolt (used on 745 custom)	..	6	..	6	..	..
5929	Side wheel carrier bracket bolt (7/16—20 x 1½" hex. hd.)	..	..	..	..	8	8
7008	Nut (½"—20 plain)	8	8	8	8	..	..
5510	Lockwasher (½")	8	8	8	8	..	..
5133	Washer (½")	..	..	4	6	..	..
194012	Side wheel carrier bracket brace (prior to frame No. 193788)	..	..	..	..	..	2
194691	Side wheel carrier bracket brace—right (after frame No. 193787	..	..	..	..	..	1
194690	Side wheel carrier bracket brace—left (after frame No. 193787)	..	..	..	..	..	1
194763	Side wheel carrier bracket brace—right (after frame No. 344175)	..	..	..	..	1	..
194024	Side wheel carrier bracket brace (prior to frame No. 344176)	..	..	..	..	2	..
194762	Side wheel carrier bracket brace—left (after frame No. 344175)	..	..	..	..	1	..
194021	Side wheel carrier bracket brace nut—outer	..	..	..	..	2	2
7008	Side wheel carrier bracket brace nut—inner	..	..	..	..	2	2
5510	Lockwasher (½")	..	..	..	..	2	2
194019	Side wheel carrier bracket brace grommet	..	..	..	..	2	2
147892	Side wheel carrier bracket frame reinforcement	2	..	2	..	..	..

packardinfo.com

Printed in U. S. A.

Piece No.	Name	No. Required 726 733	740 745	826 833	840 845	901 902	903 904
191986	Side wheel carrier bracket to running board splasher grommet right (prior to frame No. 344176)					1	
194776	Side wheel carrier bracket to running board splasher grommet right (after frame No. 344175)					1	
191483	Side wheel carrier bracket to running board splasher grommet right (prior to frame No. 193788)						1
191985	Side wheel carrier bracket to running board splasher grommet left (prior to frame No. 344176)					1	
194775	Side wheel carrier bracket to running board splasher grommet left (after frame No. 344175)					1	
191474	Side wheel carrier bracket to running board splasher grommet left (prior to frame No. 193788)						1
194769	Side wheel carrier bracket to running board splasher grommet—right (after frame No. 193787)						1
194768	Side wheel carrier bracket to running board splasher grommet—left (after frame No. 193787)						1
178734	Side wheel carrier bracket spacer—left (used on 745-845)		1		1		

packardinfo.com

Piece No.	Name	No. Required 726 733	740 745	826 833	840 845	901 902	903 904
178735	Side wheel carrier bracket spacer—right (used on 745-845)	..	1	..	1	..	..
7846	Screw (⅜"—24 x 2⅝" hex. hd.) (used on 745 custom) (845)	..	4	..	4	..	..
7891	Screw (⅜"—24 x 2⅜" hex. hd.) (used on 745)	..	4	..	..	..	..
5506	Lockwasher (⅜") (used on 745-845)	..	4	..	4	..	..
7006	Nut (⅜"—24 plain) (used on 745-845)	..	4	..	4	..	..
173352	Side wheel carrier bracket spacer (used on 740)	2	2	2	..	..	..
146316	Side wheel carrier bracket pin (disc)	4	4	4	4	..	..
146317	Side wheel carrier bracket pin (wood and wire)	4	4	4	4	..	..
5510	Lockwasher (½") (wood)	8	8	8	8	..	..
5510	Lockwasher (½") (disc and wire)	4	4	..	4	..	..
7008	Nut (½"—20 plain)	4	4	4	4	..	..
173182	Side wheel carrier lock plate assembly (wire) (use with 5 1/16" dia. hub shell cover)	2	..	..	..	..	..
177704	Side wheel carrier lock plate assembly (wire) (use with 6½" dia. hub shell cover)	2	..	..	..	..	..
169565	Side wheel carrier lock plate assembly (wire) (use with 6 1/16" dia. hub shell cover)	..	2	..	..	..	..
177690	Side wheel carrier lock plate assembly (wire) (use with 7½" dia. hub shell cover)	..	2	..	..	..	..
169563	Side wheel carrier lock	2	2	..	..	..	..
182479	Side wheel carrier lock	..	..	2	2	2	2
169564	Side wheel carrier lock retainer	2	2	2	2	2	2
170187	Side wheel carrier lock plate and retainer assembly (disc)	2	..	2	..	2	..
177877	Side wheel carrier lock plate and retainer assembly (wood)	2	..	2	..	2	..
169567	Side wheel carrier lock plate and retainer assembly (disc and wood)	..	2	..	2	..	2
181054	Side wheel carrier lock plate and retainer assembly (wire)	..	..	2	..	2	..
181055	Side wheel carrier lock plate and retainer assembly (wire)	..	..	..	2	..	2
156455	Side wheel carrier lock plate nut (wire) (use with 5 1/16" and 6 1/16 dia. hub shell cover)	2	2	..	..	..	..
177687	Side wheel carrier lock plate nut (wire) (use with 6½" and 7½" dia. hub shell cover)	2	2	..	..	..	..
156451	Side wheel carrier lock plate nut (wood) (⅝" —18 thd.)	2	2	2	2	2	2
195906	Side wheel carrier lock plate nut (wood) (⅝" —11 thd.)	..	..	..	..	2	2
156450	Side wheel carrier lock plate nut (disc and wire) (⅝" —18 thd.)	2	2	2	2	2	2
195909	Side wheel carrier lock plate nut (disc and wire) (⅝"— 11 thd.)	..	..	..	..	2	2
148846	Side wheel carrier lock plate nut retainer	2	2	2	2	2	2
173181	Side wheel carrier lock plate cushion (wire) (use with 5 1/16" dia. hub shell cover)	2	..	..	..	..	..
177685	Side wheel carrier lock plate cushion (wire) (use with 6½" dia. hub shell cover)	2	..	..	..	..	..
166322	Side wheel carrier lock plate cushion (wire) (use with 6 1/16" dia. hub shell cover)	..	2	..	..	..	..
177684	Side wheel carrier lock plate cushion (wire) (use with 7½" dia. hub shell cover)	..	2	..	..	..	..
146322	Side wheel carrier lock plate retainer (wire)	..	2	..	..	..	..
173350	Side wheel carrier lock plate retainer (wire)	2	..	..	..	..	..
194011	Side wheel carrier pin (disc and wire)	..	..	..	..	2	2
7008	Nut (½"—20)	..	..	..	..	2	2
5510	Lockwasher (½")	..	..	..	..	2	2
194309	Side wheel carrier pin—long	..	..	..	..	2	2

ManualsInfo.com

Printed in U. S. A.

OPEN BODY ATTACHING PARTS

Piece No.	Name	Number Required 400	410	420	401 431	411 441	421 451	402	412	422
7618	Body to frame bolt No. 1 carriage, $\frac{7}{16}$—20 x 3″	2	2	2	2	2	2	2	2	2
7834	Body to frame bolt No. 2, $\frac{7}{16}$—20 x 3 $\frac{1}{8}$″ hex. hd. mach	2	2	2	2	2	2	2	2	2
7839	Body to frame bolt No. 3, $\frac{7}{16}$—20 x 2 $\frac{1}{2}$″ hex. hd. mach	..	..	..	..	..	..	2	2	2
7834	Body to frame bolt No. 3, $\frac{7}{16}$—20 x 3 $\frac{1}{8}$″ hex. hd. mach	2	2	2	2	2	2	..	..	..
5453	Body to frame bolt No. 4, $\frac{7}{16}$—20 x 2 $\frac{7}{8}$″ flat hd. mach	2	2	2	2	2	2	..	..	..
7839	Body to frame bolt No. 4, $\frac{7}{16}$—20 x 2 $\frac{1}{2}$″ hex. hd. mach	..	..	..	..	..	..	2	2	2
7886	Body to frame bolt No. 5, $\frac{7}{16}$—20 x 1 $\frac{3}{4}$″ hex. hd. mach	2	2	..	..	..	..	..	..	..
5740	Body to frame bolt No. 5, $\frac{7}{16}$—20 x 2″ hex. hd. mach	..	..	..	..	..	..	2	2	..
175578	Body to frame bolt No. 5 carriage, $\frac{7}{16}$—20 x 3 $\frac{5}{8}$″ skew. hd	..	..	..	2	2	..	..	..	..
5671	Body to frame bolt No. 5, $\frac{7}{16}$—20 x 5 $\frac{3}{8}$″ hex. hd. mach	..	..	2	..	..	..	..	..	2
166462	Body to frame bolt No. 5 carriage, $\frac{7}{16}$—20 x 7 $\frac{3}{8}$″ skew. hd	..	..	..	..	..	2	..	..	..
176069	Body to frame bolt No. 5 frame spacer	..	..	..	..	..	2	..	..	..
131809	Body to frame bolt washer—large $\frac{7}{16}$″ plain—special	4	4	4	4	4	4	6	6	6
131046	Body to frame bolt washer—small $\frac{7}{16}$″ plain—special	10	10	10	8	8	8	10	10	10
5508	Body to frame bolt—lockwasher $\frac{7}{16}$″	10	10	10	10	10	10	10	10	10
7007	Body to frame bolt—nut $\frac{7}{16}$″—20 plain	8	8	8	8	8	8	8	8	8
175676	Body to frame bolt—bracket—nut	2	2	2	2	2	2	2	2	2
173486	Body to frame liner ($\frac{3}{16}$″ thick)	4	4	4	4	4	4	4	4	4
173488	Body to frame liner ($\frac{3}{16}$″ thick)	4	4	4	4	4	4	4	4	4
175230	Body to frame liner ($\frac{1}{4}$″ thick)	x	x	x	x	x	x	x	x	x
175231	Body to frame liner ($\frac{5}{16}$″ thick)	x	x	x	x	x	x	x	x	x
167924	Body to frame liner hand brake lever insulator	1	1	1	1	1	1	1	1	1
173487	Body hold down bolt bracket liner (thick)	2	2	2	2	2	2	2	2	2
176760	Frame rear end splasher to body liner	..	..	x	..	..	x	..	..	x
5475	Screw (No. 4—40 x $\frac{5}{16}$″ flat hd. mach.)	..	..	..	..	..	2	..	..	..
5181	Wood screw (No. 4 x $\frac{3}{4}$″ flat hd.)	..	..	..	..	..	7	..	..	8
33170	Wood screw ferrule (No. 4)	..	..	9	..	..	9	..	..	10
175763	Screw (No. 4 x $\frac{3}{8}$″ flat hd.)	..	..	9	..	..	..	..	..	2

BONNET DASH LINER

139804	Bonnet dash liner (in rolls)	x	x	x	x	x	x	x	x	x
46527	Rivet (No. 632 $\frac{9}{64}$ x $\frac{1}{4}$″ flat hd. tubular)	34	34	34	34	34	34	34	34	34

CABLES

167069	Body wiring cable—19 strand No. 16 (green braid)	x	x	x	x	x	x	x	x	x
166406	Body wiring cable—19 strand No. 16 (red braid)	x	x	x	x	x	x	x	x	x
166404	Body wiring cable—19 strand No. 16 (black braid)	x	x	x	x	x	x	x	x	x
29254	Body wiring cable staple insulated	x	x	x	x	x	x	x	x	x
48202	Body wiring cable terminal	..	..	..	..	..	..	x	x	x
159085	Body wiring cable terminal	x	x	x	x	x	x	..	..	..
33287	Body wiring cable terminal	x	x	x	x	x	x	x	x	x
36111	Body wiring cable terminal insulator	x	x	x	x	x	x	x	x	x

CARPETS

174710	Carpet assembly—folding seat floor—left (with folding seat support 9″ long from center to center)	1	1	1	..	..	..	..	..	..
177645	Carpet assembly—folding seat floor—right (with folding seat support 9″ long from center to center)	1	1	1	..	..	..	..	..	..
179584	Carpet assembly—folding seat floor—(with folding seat support 7 $\frac{15}{16}$″ long from center to center)	2	2	2	..	..	..	..	..	..
174524	Carpet assembly—front floor	1	1	1	1	1	1	1	1	1
174701	Carpet assembly rear floor	1	1	1	..	..	..	..	..	..
174703	Carpet assembly—rear floor	..	..	..	1	1	1	..	..	..

packardinfo.com

DOORS

All doors must be adjusted to each respective body. To obtain satisfactory replacement of doors, it is advisable to return the damaged door to be repaired, if possible. If this cannot be done, the customer assumes the responsibility of the new door being a satisfactory fit.

Specify on all orders the upholstery material, color of paint and striping.

Piece No.	Name	Number Required 400	410	420	401 431	411 441	421 451	402	412	422
176984	Door front right trimmed assembly	1	1	..	1	1	..	1	1	..
176985	Door front right trimmed assembly	..	..	1	..	..	1	..	..	1
177046	Door front left trimmed assembly	1	1	..	1	1	..	1	1	..
177047	Door front left trimmed assembly	..	..	1	..	..	1	..	..	1
177059	Door rear left trimmed assembly	1	1	..	1	1	..	..	..	..
177060	Door rear left trimmed assembly	..	..	1	..	..	1	..	..	..
177069	Door rear right trimmed assembly	1	1	..	1	1	..	..	..	..
177070	Door rear right trimmed assembly	..	..	1	..	..	1	..	..	..

DOOR PARTS

111671	Door bumper	8	8	8	8	8	8	4	4	4
177015	Door check—right	1	1	1	1	1	1	..	..	..
177016	Door check—left	1	1	1	1	1	1	..	..	..
176127	Door curtain carrier rod—left	2	2	2	..	..	..	..	..	..
176125	Door curtain carrier rod—left	..	..	..	2	2	2	1	1	1
176126	Door curtain carrier rod—right	2	2	2	..	..	..	..	..	..
176124	Door curtain carrier rod—right	..	..	..	2	2	2	1	1	1
165759	Door curtain carrier socket	4	4	4	4	4	4	2	2	2
119226	Door dovetail bumper	8	8	8	8	8	8	4	4	4
119245	Door dovetail bumper clip	8	8	8	8	8	8	4	4	4
119297	Door dovetail casing	4	4	4	4	4	4	2	2	2
119296	Door dovetail female retainer	4	4	4	4	4	4	2	2	2
119298	Door dovetail male	4	4	4	4	4	4	2	2	2
118500	Door hinge	8	8	8	8	8	8	4	4	4
174165	Door hinge pillar facing—front right	1	1	1	1	1	1	1	1	1
174164	Door hinge pillar facing—front left	1	1	1	1	1	1	1	1	1
174167	Door hinge pillar facing—rear right	1	1	1	1	1	1	..	..	..
174166	Door hinge pillar facing—rear left	1	1	1	1	1	1	..	..	..
165021	Door lock	4	4	4	4	4	4	2	2	2
173952	Door lock handle	4	4	4	..	..	..	..	..	..
173953	Door lock handle	..	..	..	4	4	4	2	2	2
165015	Door lock lever assembly—left	2	2	2	2	2	2	1	1	1
165014	Door lock lever assembly—right	2	2	2	2	2	2	1	1	1
168020	Door lock lever handle—nut	4	4	4	4	4	4	2	2	2
174113	Door lock lever handle—right	2	2	2	2	2	2	1	1	1
174114	Door lock lever handle—left	2	2	2	2	2	2	1	1	1
165541	Door lock lever handle pocket moulding—right	2	2	2	2	2	2	1	1	1
165542	Door lock lever handle pocket moulding—left	2	2	2	2	2	2	1	1	1
174115	Door lock lever and link assembly—front right	1	1	1	1	1	1	1	1	1
174116	Door lock lever and link assembly—front left	1	1	1	1	1	1	1	1	1
174188	Door lock lever and link plate assembly—rear right	1	1	1	1	1	1	..	..	..
174189	Door lock lever and link plate assembly—rear left	1	1	1	1	1	1	..	..	..
173814	Door lock striker—right	2	2	2	2	2	2	1	1	1
174223	Door lock striker—left	2	2	2	2	2	2	1	1	1
174156	Door scuff plate—front left	1	1	1	1	1	1	1	1	1
174155	Door scuff plate—front right	1	1	1	1	1	1	1	1	1
174158	Door scuff plate—rear left	1	1	1	1	1	1	..	..	..
174157	Door scuff plate—rear right	1	1	1	1	1	1	..	..	..

FASTENERS

110035	Fastener eyelet—top curtain	..	..	..	..	..	..	x	x	x
161793	Fastener eyelet—short prong—curtain carrier strap	..	..	..	..	..	..	x	x	x

packardinfo.com

Piece No.	Name	Number Required 400	410	420	401 431	411 441	421 451	402	412	422
139915	Fastener eyelet—short prong top curtain							x	x	x
161792	Fastener eyelet plate top curtain							x	x	x
49543	Fastener eyelet plate—top curtain							x	x	x
177609	Fastener plate prong—top curtain							x	x	x
177608	Fastener—single (prong)—top curtain							x	x	x
161794	Fastener—single—top curtain							x	x	x
49094	Fastener—double flat—top curtain							x	x	x
116554	Snap fastener machine screw post—double—top curtain	x	x	x	x	x	x	x	x	x
115268	Snap fastener machine screw post—single—top curtain	x	x	x	x	x	x	..	..	..
175580	Snap fastener machine screw post—single cowl panel	x	x	x	x	x	x	x	x	x
139157	Snap fastener rivet post—female—door pocket	x	x	x	x	x	x	x	x	x
139157	Snap fastener rivet post—female—top curtain	x	x	x	x	x	x	x	x	x
139158	Snap fastener rivet post—male—top curtain	x	x	x	x	x	x	x	x	x
148637	Snap fastener rivet post—male—top curtain	x	x	x	x	x	x	x	x	x
139160	Snap fastener rivet post—male—long door pocket	x	x	x	x	x	x	x	x	x
112058	Snap fastener screw post carpet	x	x	x	x	x	x	x	x	x
112058	Snap fastener screw post—top curtain	x	x	x	x	x	x	x	x	x
139150	Snap fastener socket—female—door pocket	x	x	x	x	x	x	x	x	x
76926	Snap fastener socket—female—top curtain	x	x	x	x	x	x	x	x	x
139150	Snap fastener socket—female—top curtain	x	x	x	x	x	x	x	x	x
115799	Snap fastener socket carpet	x	x	x	x	x	x	x	x	x
76925	Snap fastener socket—male—short prong—top curtain	x	x	x	x	x	x	x	x	x
115798	Snap fastener socket ring—carpet	x	x	x	x	x	x	x	x	x
139159	Snap fastener socket—top door panel	x	x	x	x	x	x	x	x	x
139159	Snap fastener top—top curtain	x	x	x	x	x	x	x	x	x
116446	Snap fastener wood screw post—double—top curtain	x	x	x	..	..	..	x	x	x
106755	Snap fastener wood screw post—single—top curtain	x	x	x	x	x	x	x	x	x

FLOOR BOARD

169956	Floor board—front—assembly	1	1	1	1	1	1	1	1	1
169932	Floor board—rear—assembly	1	1	1	1	1	1	..	..	..

FOLDING SEAT

174709	Folding seat trimmed assembly (with support 9" long from center to center)	2	2	..	..	..	..	..	..	..
175902	Folding seat trimmed assembly (with support 9" long from center to center)	..	..	2	..	..	..	..	..	..
179595	Folding seat trimmed assembly (with support $7\frac{5}{16}$" long from center to center)	2	2	..	..	..	..	..	..	..
179596	Folding seat trimmed assembly (with support $7\frac{15}{16}$" long from center to center)	..	..	2	..	..	..	..	..	..
179508	Folding seat untrimmed assembly (with support $7\frac{15}{16}$" long from center to center)	2	2	..	..	..	..	..	..	..
179509	Folding seat untrimmed assembly (with support $7\frac{15}{16}$" long from center to center)	..	..	2	..	..	..	..	..	..
178477	Folding seat untrimmed assembly (with support 9" long from center to center)	2	2	..	..	..	..	..	..	..
178478	Folding seat untrimmed assembly (with support 9" long from center to center)	..	..	2	..	..	..	..	..	..
178507	Folding seat back untrimmed assembly (black enamel)	2	2	2	..	..	..	..	..	..
178508	Folding seat back untrimmed assembly (nickel plate)	..	..	2	..	..	..	..	..	..
167945	Folding seat back to seat frame screw	4	4	4	..	..	..	..	..	..
169957	Folding seat floor plate	1	1	1	..	..	..	..	..	..
169788	Folding seat frame assembly (black enamel)	2	2	2	..	..	..	..	..	..
171692	Folding seat frame assembly (nickel plate)	..	..	2	..	..	..	..	..	..
5580	Screw (No. 10—32 x 1" F. H. mach.)	16	16	16	..	..	..	..	..	..
5229	Screw ($\frac{1}{4}$—28 x $1\frac{3}{8}$" F. H. mach.)	8	8	8	..	..	..	..	..	..
8220	Screw ($\frac{1}{4}$—28 x $1\frac{1}{2}$" F. H. mach.)	8	8	8	..	..	..	..	..	..
7003	Nut (No. 10—32 plain)	16	16	16	..	..	..	..	..	..

packardinfo.com

Piece No.	Name	Number Required 400	410	420	401 431	411 441	421 451	402	412	422
7004	Nut (1/4" 28 plain)	16	16	16						
3867	Washer (3/16" plain)	4	4	4						
169779	Folding seat frame side—left (black enamel)	2	2	2						
171698	Folding seat frame side—left (nickel plate)			2						
169778	Folding seat frame side—right (black enamel)	2	2	2						
171703	Folding seat frame side—right (nickel plate)			2						
179402	Folding seat handle assembly	2	2	2						
100100	Folding seat pivot pin	4	4	4						
170341	Folding seat pivot pin retainer (with folding seat support 9" long from center to center)	2	2	2						
179620	Folding seat pivot pin retainer (with folding seat support 7 5/16" long from center to center)	2	2	2						
5782	Screw (1/4—28 x 3 1/4" flat hd. mach.)	4	4	4						
5502	Lock washer (1/4")	4	4	4						
7004	Nut (1/4"—28)	4	4	4						
62065	Washer (17/64 x 3/4") plain	4	4	4						
178475	Folding seat support—left (black enamel) (9" long from center to center)	2	2	2						
178480	Folding seat support—left (nickel plate)			2						
178476	Folding seat support—right (black enamel) (9" long from center to center)	2	2	2						
178479	Folding seat support—right (nickel plate) (9" long from center to center)			2						
178475	Folding seat support—left (7 15/16" long from center to center)	2	2							
179525	Folding seat support—left (7 15/16" long from center to center)			2						
179515	Folding seat support—right (7 15/16" long from center to center)	2	2							
179524	Folding seat support—right (7 15/16" long from center to center)			2						
130869	Folding seat support to seat frame screw	4	4	4						
7006	Nut (3/8"—24 plain)	4	4	4						
5506	Lock washer (3/8")	4	4	4						

FOOT REST

163743	Foot rest assembly		1	1						
139030	Foot rest assembly				1					
163745	Foot rest assembly					1	1			
79574	Foot rest assembly	1						1	1	1
122146	Foot rest pivot—stud	2			2			2	2	2
147963	Foot rest pivot—stud		2							
180134	Nut (3/8"—24 blind)				2			2	2	2

FRONT SEAT

142793	Front seat back compartment lid hinge							1	1	1
148321	Front seat back compartment lid lock							1	1	1
164259	Front seat back compartment lid lock escutcheon plate							1	1	1
157080	Front seat back compartment lid lock striker							1	1	1
170670	Front seat (left) frame carrier bracket—lower	1	1	1	1	1	1	1	1	1
171009	Front seat (left) frame carrier bracket—upper	1	1	1	1	1	1	1	1	1
175131	Front seat (left) lever assembly	1	1	1	1	1	1	1	1	1
29874	Front seat (left) lever spring	2	2	2	2	2	2	2	2	2
3877	Washer (3/8" plain)	2	2	2	2	2	2	2	2	2
4290	Pin (3/32 x 5/8" spring cotter)	2	2	2	2	2	2	2	2	2
175129	Front seat (left) operating knob and shaft assembly	1	1	1	1	1	1	1	1	1
175272	Front seat (left) operating screw assembly	1	1	1	1	1	1	1	1	1
4648	Pin (3/16 x 1 1/16" straight)	1	1	1	1	1	1	1	1	1
175132	Front seat (left) operating screw nut	1	1	1	1	1	1	1	1	1
175126	Front seat (left) operating screw thrust washer	1	1	1	1	1	1	1	1	1
4319	Pin (5/32 x 5/8" spring cotter)	1	1	1	1	1	1	1	1	1
175128	Front seat (left) operating shaft	1	1	1	1	1	1	1	1	1
5033	Ball (1/4")	1	1	1	1	1	1	1	1	1
116955	Ball spring (5/32")	1	1	1	1	1	1	1	1	1
5735	Front seat (left) operating shaft stop screw	1	1	1	1	1	1	1	1	1

packardinfo.com

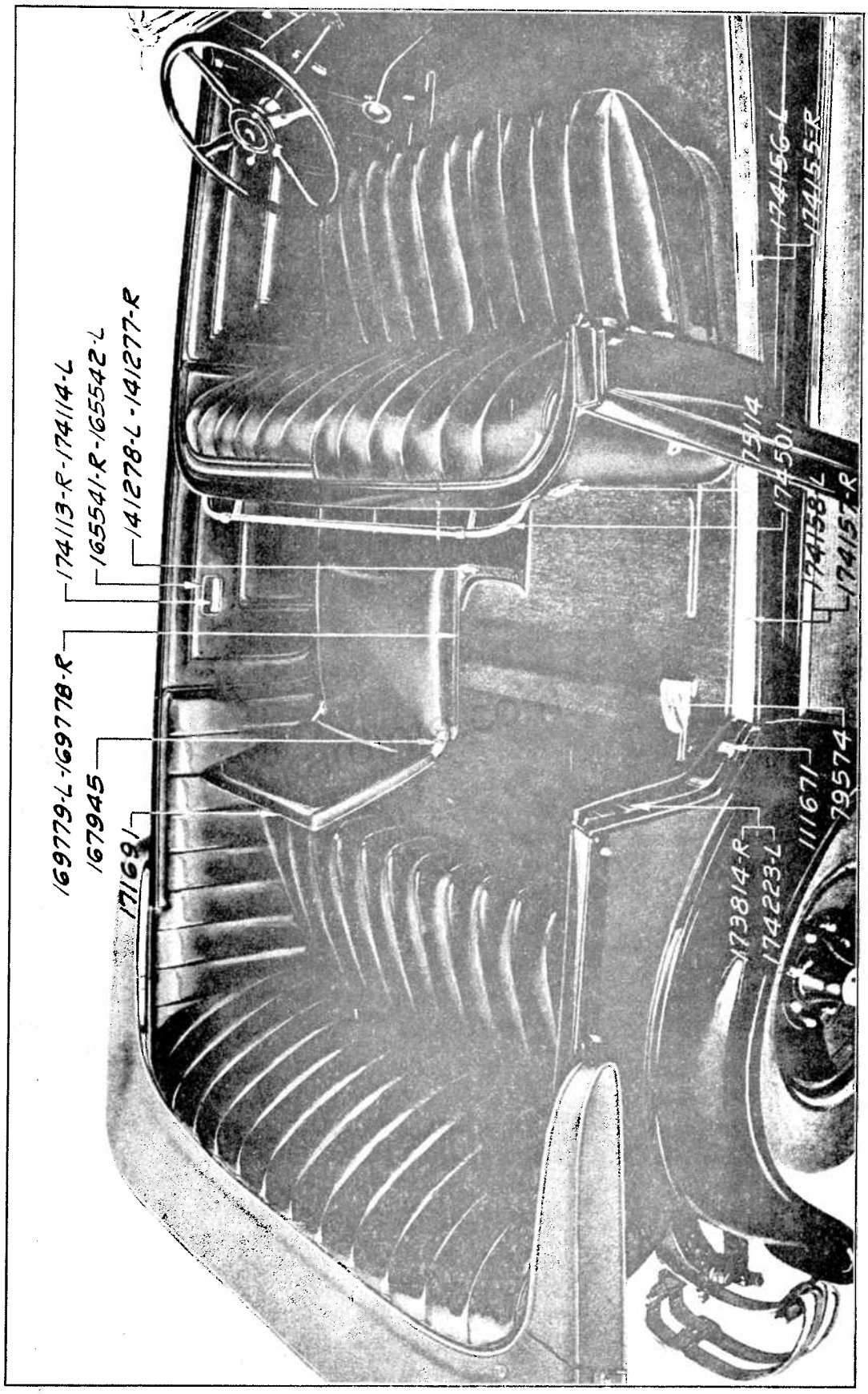
174113-R-174114-L
165541-R-165542-L
141278-L-141277-R
169779-L-169778-R
167945
17169
173814-R
174223-L
111671
79574
174158-L
174501
174157-R
174156-L
174155-R

Piece No.	Name	Number Required 400	410	420	401 431	411 441	421 451	402	412	422
173016	Front seat (left) retaining bracket	1	1	1	1	1	1	1	1	1
175133	Front seat (left) thrust bracket—female	1	1	1	1	1	1	1	1	1
175134	Front seat (left) thrust bracket—male	1	1	1	1	1	1	1	1	1
8201	Screw (¼—28 x ⅝" flat hd. mach.)	4	4	4	4	4	4	4	4	4
5502	Lock washer (¼")	4	4	4	4	4	4	4	4	4
7004	Nut (¼"—28 plain)	4	4	4	4	4	4	4	4	4

GOLF COMPARTMENT

175989	Golf compartment door trimmed assembly	..	..	..	..	..	..	1	1	1
111671	Golf compartment door bumper	..	..	..	..	..	..	2	2	2
111672	Golf compartment door bumper socket	..	..	..	..	..	..	2	2	2
163766	Golf compartment door hinge	..	..	..	..	..	..	1	1	1
163767	Golf compartment door lock	..	..	..	..	..	..	1	1	1
143615	Golf compartment door lock striker	..	..	..	..	..	..	1	1	1

INSTRUMENT BOARD

174180	Instrument board assembly	1	1	1	1	1	1	1	1	1
178489	Instrument board compartment door assembly—right	1	1	1	1	1	1	1	1	1
178488	Instrument board compartment door assembly—left	1	1	1	1	1	1	1	1	1
5584	Screw (No. 6—40 x ⅜" flat hd. mach.)	6	6	6	6	6	6	6	6	6
3516	Lock washer (No. 6)	6	6	6	6	6	6	6	6	6
7001	Nut (No. 6—40 plain)	6	6	6	6	6	6	6	6	6
174723	Instrument board compartment door bumper	2	2	2	2	2	2	2	2	2
173805	Instrument board compartment door hinge—right	1	1	1	1	1	1	1	1	1
173806	Instrument board compartment door hinge—left	1	1	1	1	1	1	1	1	1
173347	Instrument board compartment door knob (ivory)	2	2	2	2	2	2	2	2	2
178440	Instrument board compartment door knob (green tint)	2	2	2	2	2	2	2	2	2
8027	Screw No. 10—32 x 1 ½" oval hd. mach	2	2	2	2	2	2	2	2	2
7717	Screw No. 10—32 x ½" fill hd. mach.	2	2	2	2	2	2	2	2	2
5500	Lockwasher No. 10	2	2	2	2	2	2	2	2	2
105029	Instrument board compartment door spring dowel	2	2	2	2	2	2	2	2	2
172129	Instrument board compartment door spring dowel plate	2	2	2	2	2	2	2	2	2
5709	Screw (No. 4—40 x ½" flat hd. mach.)	4	4	4	4	4	4	4	4	4
5459	Lock washer (No. 4)	4	4	4	4	4	4	4	4	4
7000	Nut (No. 4)	4	4	4	4	4	4	4	4	4
175384	Instrument board steering post bracket support	1	1	1	1	1	1	1	1	1
5701	Screw (¼—28 x 9/16" flat hd.)	2	2	2	2	2	2	2	2	2
5574	Screw (¼—28 x ⅞" hex. hd.)	2	2	2	2	2	2	2	2	2
3868	Washer (¼" plain)	2	2	2	2	2	2	2	2	2
5502	Lock washer (¼")	4	4	4	4	4	4	4	4	4
7004	Nut (¼"—28 plain)	4	4	4	4	4	4	4	4	4

PANELS

173259	Panel—cowl assembly	1	1	1	1	1	1	1	1	1
170298	Panel—dash assembly	1	1	1	1	1	1	1	1	1
174724	Panel—door front right assembly	1	1	1	1	1	1	1	1	1
174725	Panel—door front left assembly	1	1	1	1	1	1	1	1	1
174726	Panel—door rear right assembly	1	1	1	1	1	1	..	..	..
174727	Panel—door rear left assembly	1	1	1	1	1	1	..	..	..

REAR DECK

175225	Rear deck rubber mat	..	..	..	..	..	..	1	1	1
175227	Rear deck rubber mat binding strip—long	..	..	..	..	..	..	2	2	2
175143	Rear deck rubber mat binding strip—short	..	..	..	..	..	..	2	2	2
4610	Wood screw (No. 6 x 1" oval hd.)	..	..	..	..	..	..	28	28	28

REAR VIEW MIRROR

176816	Rear view mirror assembly	1	1	1	1	1	1	1	1	1
5589	Screw (No. 103—2 x ½" rnd. hd.)	2	2	2	2	2	2	2	2	2
163885	Nut (No. 10—32 blind—special)	2	2	2	2	2	2	2	2	2

packardinfo.com

ROBE RAIL

Piece No.	Name	Number Required 400	410	420	401 431	411 441	421 451	402	412	422
174501	Robe rail assembly (Used in 400-410-420-401-411-421)	1	1	1	1	1	1			

RUMBLE SEAT

157018	Rumble seat compartment door bumper							2	2	2
173129	Rumble seat compartment door hinge—right							1	1	1
173130	Rumble seat compartment door hinge—left							1	1	1
7604	Bolt (¼"—28 x 1⅝")							6	6	6
7004	Nut (¼"—28)							6	6	6
5502	Lock washer (¼")							6	6	6
157583	Rumble seat compartment door operating spring							2	2	2
157584	Rumble seat compartment door operating spring bolt							2	2	2
7104	Nut (¼"—28)							2	2	2
4280	Cotter pin (1/16 x ½")							2	2	2
157585	Rumble seat compartment door operating spring washer							2	2	2
127501	Rumble seat compartment door hinge bushing							2	2	2
127498	Rumble seat compartment door hinge screw							2	2	2
3884	Washer (½")							2	2	2
5510	Lock washer (½")							2	2	2
157625	Rumble seat compartment door lock striker							1	1	1
173138	Rumble seat compartment drain gutter assembly							1	1	1
102590	Rumble seat compartment light bulb (7-V, 3-CP-G-6 single contact)							1	1	1
107654	Rumble seat compartment light disconnector plug socket							1	1	1
136593	Rumble seat compartment light switch (2 point)							1	1	1
148338	Rumble seat door lock							1	1	1
148339	Rumble seat door lock operating lever							1	1	1
173411	Rumble seat door lock operating rod and yoke end assembly							1	1	1
176664	Rumble seat step lower (used with rear wheel carrier) (specify finish)									1
176666	Rumble seat step lower (used with side wheel carrier) (specify finish)									1
176674	Rumble seat step lower (used with side wheel carrier)							1	1	
175145	Rumble seat step lower (used with rear wheel carrier)							1	1	
175144	Rumble seat step lower clamp plate (used with rear wheel carrier) (specify finish)							2	2	2
175144	Rumble seat step lower clamp plate (used with side wheel carrier)							1	1	1
7859	Screw (¼—28 x 1½" hex. hd. mach.)							3	3	3
7842	Screw (¼—28 x 1¼" hex. hd.)							2	2	2
5434	Screw (¼—28 x 1⅝" hex. hd. mach.)							1	1	1
5502	Lock washer (¼")							6	6	6
7004	Nut (¼"—28)							10	10	10
173644	Rumble seat step—upper (black enamel)							1	1	1
179602	Rumble seat step—upper (specify finish)									1
6116	Stud (⅜")							3	3	3
114055	Washer (⅜")							3	3	3
5506	Lock washer (⅜")							3	3	3
7006	Nut (⅜"—24)							3	3	3
177858	Rumble seat step upper bracket (black enamel)							1	1	1
179604	Rumble seat step upper bracket (specify finish)									1
7861	Screw (5/16—24 x 1" hex. hd. mach.)							2	2	2
5504	Lock washer (5/16")							2	2	2
179123	Rumble seat step upper liner							1	1	1

SEAT CUSHIONS AND SPRINGS

176150	Seat back spring—front left	1	1				1			
179617	Seat back spring—front left			1	1	1		1	1	1
176151	Seat back spring—front right	1	1				1			
179613	Seat back spring—front right			1	1	1		1	1	1

Piece No.	Name	Number Required 400	410	420	401 431	411 441	421 451	402	412	422
176037	Seat back spring—rear	1	1	1	..	..	..	..	..	..
179616	Seat back spring—rear	..	..	..	1	1	1	..	..	..
173640	Seat back spring—rumble seat	..	..	..	..	..	..	1	1	1
175984	Seat cushion assembly—front left	1	..	..	..	..	..	..	..	..
179416	Seat cushion assembly—front left	..	..	..	1	..	..	1	..	..
175985	Seat cushion assembly—front left	..	1	..	..	..	..	..	..	..
179417	Seat cushion assembly—front left	..	..	..	..	1	..	..	1	..
175979	Seat cushion assembly—front left	..	..	1	..	..	..	..	..	..
179418	Seat cushion assembly—front left	..	..	..	..	..	1	..	..	1
175986	Seat cushion assembly—front right	1	..	..	..	..	..	..	..	..
179419	Seat cushion assembly—front right	..	..	..	1	..	..	1	..	..
175987	Seat cushion assembly—front right	..	1	..	..	..	..	..	..	..
179420	Seat cushion assembly—front right	..	..	..	..	1	..	..	1	..
175982	Seat cushion assembly—front right	..	..	1	..	..	..	..	..	..
179421	Seat cushion assembly—front right	..	..	..	..	..	1	..	..	1
174735	Seat cushion assembly—rear	1	..	..	..	..	..	..	..	..
174736	Seat cushion assembly—rear	..	1	..	..	..	..	..	..	..
179422	Seat cushion assembly—rear	..	..	..	1	..	..	..	..	..
179423	Seat cushion assembly—rear	..	..	..	..	1	..	..	..	..
176045	Seat cushion assembly—rear	..	..	1	..	..	..	..	..	..
179424	Seat cushion assembly—rear	..	..	..	..	..	1	..	..	..
173641	Seat cushion assembly—rumble seat	..	..	..	..	..	..	1	1	1
178509	Seat cushion spring—front left	1	1	1	..	..	..	..	..	..
179324	Seat cushion spring—front left (special low type)	1	1	1	1	1	1	1	1	1
179612	Seat cushion spring—front left	..	..	..	1	1	1	1	1	1
178510	Seat cushion spring—front right	1	1	1	..	..	..	..	..	..
179325	Seat cushion spring—front right (special low type)	1	1	1	1	1	1	1	1	1
179611	Seat cushion spring—front right	..	..	..	1	1	1	1	1	1
176052	Seat cushion spring—rear seat	1	1	1	..	..	..	..	..	..
179335	Seat cushion spring—rear seat (special low type)	1	1	1	..	..	..	..	..	..
179607	Seat cushion spring—rear seat	..	..	..	1	1	1	..	..	..
172294	Seat cushion spring—folding seat	2	2	2	..	..	..	..	..	..
173643	Seat cushion spring—rumble seat	..	..	..	..	..	..	1	1	1

SPOTLIGHT

175582	Spotlight assembly	1	1	1	1	1	1	1	1	1
186871	Spotlight bulb—32-CP—double contact—mazda No. 1134	1	1	1	1	1	1	1	1	1
102507	Spotlight cable grommet	1	1	1	1	1	1	1	1	1

TONNEAU COWL

176786	Tonneau cowl bumper	..	..	..	2	2	2	..	..	..
176314	Tonneau cowl clamp	..	..	..	2	2	2	..	..	..
176315	Tonneau cowl clamp bracket and bumper retainer	..	..	..	2	2	2	..	..	..
176288	Tonneau cowl counterbalance assembly	..	..	..	2	2	2	..	..	..
176638	Tonneau cowl counterbalance screw—lower	..	..	..	2	2	2	..	..	..
177006	Tonneau cowl counterbalance screw—upper	..	..	..	2	2	2	..	..	..
176657	Tonneau cowl counterbalance bracket—lower	..	..	..	2	2	2	..	..	..
176289	Tonneau cowl counterbalance spring	..	..	..	2	2	2	..	..	..
176312	Tonneau cowl hinge—female—right	..	..	..	1	1	1	..	..	..
176313	Tonneau cowl hinge—female—left	..	..	..	1	1	1	..	..	..
5595	Screw ($\frac{3}{8}$—24 x $2\frac{1}{16}$" hex. hd. mach.)	..	..	..	4	4	4	..	..	..
5506	Lock washer ($\frac{3}{8}$")	..	..	..	4	4	4	..	..	..
176658	Tonneau cowl hinge—male—right	..	..	..	1	1	1	..	..	..
176659	Tonneau cowl hinge—male—left	..	..	..	1	1	1	..	..	..
176318	Tonneau cowl hinge screw	..	..	..	2	2	2	..	..	..

TONNEAU LIGHT

175114	Tonneau light assembly (with flat rim)	2	2	2	2	2	2	..	..	..
180645	Tonneau light assembly (with curved rim)	2	2	2	2	2	2	..	..	..
102590	Tonneau light bulb 7-V 3 CP—G-6 single contact	2	2	2	2	2	2	..	..	..
175671	Tonneau light glass and rim (flat rim)	2	2	2	2	2	2	..	..	..

packardinfo.com

Piece No.	Name	Number Required 400	410	420	401 431	411 441	421 451	402	412	422
180646	Tonneau light glass and rim (curved rim)	2	2	2	2	2	2	..	..	..
175672	Tonneau light reflector (use with flat rim light)	2	2	2	2	2	2	..	..	..
180647	Tonneau light reflector (use with curved rim light)	2	2	2	2	2	2	..	..	..
185031	Tonneau light switch	2	2	2	2	2	2	..	..	..
127502	Tonneau light switch plunger plate	2	2	2	2	2	2	..	..	..

TONNEAU VENTILATOR

176296	Tonneau ventilator cover assembly—left	..	..	..	1	1	1	..	..	..
176650	Tonneau ventilator cover assembly—right	..	..	..	1	1	1	..	..	..
176301	Tonneau ventilator cover spring	..	..	..	2	2	2	..	..	..
4153	Tonneau ventilator hinge rivet	..	..	..	4	4	4	..	..	..
176304	Tonneau ventilator knob	..	..	..	2	2	2	..	..	..
5500	Lock washer ($\frac{3}{16}$")	..	..	..	2	2	2	..	..	..
7003	Nut No. 10—32 plain	..	..	..	2	2	2	..	..	..
176300	Tonneau ventilator screen	..	..	..	2	2	2	..	..	..

TOOL COMPARTMENT

139035	Tool compartment door assembly	..	..	..	1	1	1	..	..	..
139046	Tool compartment door hinge	..	..	..	1	1	1	..	..	..
148304	Tool compartment door lock	..	..	..	1	1	1	..	..	..
111568	Tool compartment door lock striker	..	..	..	1	1	1	..	..	..

TOP

176256	Top assembly	1	1	1	..	..	..	..	..	..
176100	Top assembly	..	..	..	1	1	1	..	..	..
176283	Top assembly	..	..	..	..	..	..	1	1	1
176133	Top bow No. 1	1	1	1	..	..	..	..	..	..
176105	Top bow No. 1	..	..	..	1	1	1	..	..	..
176235	Top bow No. 1	..	..	..	..	..	..	1	1	1
176134	Top bow No. 2	1	1	1	..	..	..	..	..	..
176106	Top bow No. 2	..	..	..	1	1	1	..	..	..
176236	Top bow No. 2	..	..	..	..	..	..	1	1	1
176135	Top bow No. 2 (auxiliary bow)	..	..	..	..	..	..	1	1	1
176136	Top bow No. 3	1	1	1	..	..	..	..	..	..
176108	Top bow No. 3	..	..	..	1	1	1	..	..	..
176107	Top bow No. 3 (auxiliary bow)	1	1	1	1	1	1	..	..	..
176104	Top bow—front	1	1	1	1	1	1	..	..	..
176237	Top bow—front	..	..	..	..	..	..	1	1	1
31338	Top bow reinforcement wood screw ferrule	2	2	2	2	2	2	2	2	2
176273	Top bow slat assembly—right	1	1	1	..	..	..	..	..	..
176102	Top bow slat assembly—right	..	..	..	1	1	1	..	..	..
176269	Top bow slat assembly—right	..	..	..	..	..	..	1	1	1
176274	Top bow slat assembly—left	1	1	1	..	..	..	..	..	..
176103	Tow bow slat assembly—left	..	..	..	1	1	1	..	..	..
176270	Top bow slat assembly—left	..	..	..	..	..	..	1	1	1
164646	Top bow support assembly—right	..	..	..	..	..	..	1	1	1
164645	Top bow support assembly—left	..	..	..	..	..	..	1	1	1
176797	Top bow support assembly—right	1	1	1	..	..	..	..	..	..
176795	Top bow support assembly—right	..	..	..	1	1	1	..	..	..
176798	Top bow support assembly—left	1	1	1	..	..	..	..	..	..
176796	Top bow support assembly—left	..	..	..	1	1	1	..	..	..
5632	Bolt ($\frac{1}{4}$—28 x $1\frac{3}{8}$" carriage)	..	..	..	..	..	..	4	4	4
62065	Washer ($\frac{11}{64}$ x $\frac{3}{4}$")	..	..	..	..	..	..	4	4	4
5502	Lock washer ($\frac{1}{4}$")	..	..	..	..	..	..	4	4	4
7004	Nut ($\frac{1}{4}$"—28 plain)	..	..	..	..	..	..	4	4	4
139047	Top bow support bumper—right	..	..	..	..	..	..	1	1	1
139048	Top bow support bumper—left	..	..	..	..	..	..	1	1	1
176688	Top bow support strap assembly	2	2	2	2	2	2	..	..	..
175786	Top door curtain front—left assembly	..	..	..	1	1	1	..	..	..

packardinfo.com

Piece No.	Name	Number Required 400	410	420	401 431	411 441	421 451	402	412	422
175782	Top door curtain front—left assembly	1	1	1	..	..	..	..	..	..
175784	Top door curtain front—right assembly	1	1	1	..	..	..	..	..	..
175788	Top door curtain front—right assembly	..	..	..	1	1	1	..	..	..
175790	Top door curtain—left assembly	..	..	..	..	..	..	1	1	1
175792	Top door curtain—right assembly	..	..	..	..	..	..	1	1	1
176097	Top door curtain rear—right assembly	1	1	1	..	..	..	..	..	..
176098	Top door curtain rear—right assembly	..	..	..	1	1	1	..	..	..
176099	Top door curtain rear—left assembly	1	1	1	..	..	..	..	..	..
176182	Top door curtain rear—left assembly	..	..	..	1	1	1	..	..	..
176129	Top envelope assembly	1	1	1	..	..	..	..	..	..
176130	Top envelope assembly	..	..	..	1	1	1	..	..	..
176131	Top envelope assembly	..	..	..	..	..	..	1	1	1
164249	Top rear curtain—window	1	1	1	1	1	1	1	1	1
183579	Top rear curtain—window glass	1	1	1	1	1	1	1	1	1
176141	Top rear seat curtain—right assembly	1	1	1	..	..	..	..	..	.
176142	Top rear seat curtain—right assembly	..	..	..	1	1	1	..	..	..
176143	Top rear seat curtain—left assembly	1	1	1	..	..	..	..	..	..
176144	Top rear seat curtain—left assembly	..	..	..	1	1	1	..	..	..
176145	Top seat curtain—left assembly	..	..	..	..	..	..	1	1	1
176146	Top seat curtain—right assembly	..	..	..	..	..	..	1	1	1
164198	Top support bracket nut	2	2	2	2	2	2	2	2	2
164199	Top support bracket nut-lock	2	2	2	2	2	2	2	2	2
163765	Top to windshield clamp nut	2	2	2	2	2	2	2	2	2
175659	Top to windshield clamp bracket assembly—right	1	1	1	1	1	1	1	1	1
175660	Top to windshield clamp bracket assembly—left	1	1	1	1	1	1	1	1	1

VENTILATOR

173503	Ventilator cover and deflector assembly	1	1	1	1	1	1	1	1	1
137537	Ventilator cover hinge screw	2	2	2	2	2	2	2	2	2
3868	Washer (¼"—plain)	2	2	2	2	2	2	2	2	2
7104	Nut (¼"—28 castle)	2	2	2	2	2	2	2	2	2
4280	Pin ($\frac{1}{16}$ x ½"—cotter)	2	2	2	2	2	2	2	2	2
167265	Ventilator cover operating lever	1	1	1	1	1	1	1	1	1
7800	Screw (¼—26 x 1" hex. hd. mach.)	2	2	2	2	2	2	2	2	2
5502	Lock washer (¼")	2	2	2	2	2	2	2	2	2
7004	Nut (¼"—28 plain)	2	2	2	2	2	2	2	2	2
118555	Ventilator cover operating lever pin	1	1	1	1	1	1	1	1	1
118771	Ventilator cover operating pin roller	1	1	1	1	1	1	1	1	1
4280	Pin ($\frac{1}{16}$ x ½" cotter)	1	1	1	1	1	1	1	1	1
132671	Ventilator cover operating lever ratchet	1	1	1	1	1	1	1	1	1
5792	Ventilator cover operating lever ratchet yoke end pin	1	1	1	1	1	1	1	1	1
4290	Pin ($\frac{3}{32}$ x ⅝" cotter)	1	1	1	1	1	1	1	1	1
138261	Ventilator cover spring	1	1	1	1	1	1	1	1	1
145383	Ventilator hinge adjusting plate assembly—left	1	1	1	1	1	1	1	1	1
145384	Ventilator hinge adjusting plate assembly—right	1	1	1	1	1	1	1	1	1
175247	Ventilator weatherstrip	1	1	1	1	1	1	1	1	1

WINDSHIELD AND WINDSHIELD CLEANER

176692	Windshield assembly (tonneau) (used on 431-441-451)	..	..	..	1	1	1	..	..	..
176294	Windshield glass (tonneau) (used on 431-441-451)	..	..	..	1	1	1	..	..	..
173840	Windshield assembly	1	1	1	..	..	..	..	..	..
174152	Windshield assembly	..	..	..	1	1	1	1	1	1
176785	Windshield glass	1	1	1	..	..	..	..	..	..
176784	Windshield glass	..	..	..	1	1	1	1	1	1
5753	Windshield to body screw ($\frac{5}{16}$—24 x 1⅞" hex. hd.)	8	8	8	8	8	8	8	8	8
3909	Washer	8	8	8	8	8	8	8	8	8
5504	Lock washer	8	8	8	8	8	8	8	8	8
176205	Windshield to cowl liner (paper)	1	1	1	1	1	1	1	1	1
178504	Windshield to cowl liner (rubber)	1	1	1	1	1	1	1	1	1

packardinfo.com

Piece No.	Name	Number Required 400	410	420	401 431	411 441	421 451	402	412	422
179280	Windshield clamp wing nut (tonneau windshield) (used on 431-441-451)	..	..	..	2	2	2	..	..	..
184409	Windshield clamp screw	..	..	..	2	2	2	2	2	2
174288	Windshield cleaner to dash connecting tube assembly	1	1	1	1	1	1	1	1	1
157476	Windshield cleaner to dash connecting tube union nut	1	1	1	1	1	1	1	1	1
143360	Windshield cleaner to dash connecting tube clip—single	3	3	3	3	3	3	3	3	3
5569	Screw (No. 10—32 x ½" fill. hd.)	3	3	3	3	3	3	3	3	3
5500	Lock washer (No. 10 std.)	3	3	3	3	3	3	3	3	3
7003	Nut (No. 10—32—plain)	3	3	3	3	3	3	3	3	3
132878	Windshield cleaner hose	1	1	1	1	1	1	1	1	1
141305	Windshield cleaner hose	1	1	1	1	1	1	1	1	1
164153	Windshield cleaner motor—complete	1	1	1	1	1	1	1	1	1
164283	Windshield cleaner motor attaching screw	2	2	2	2	2	2	2	2	2
164282	Windshield cleaner motor spacer	2	2	2	2	2	2	2	2	2
164155	Windshield cleaner wiper—complete	1	1	1	1	1	1	1	1	1
164277	Windshield cleaner wiper arm—screw	1	1	1	1	1	1	1	1	1
164280	Windshield cleaner wiper attaching nut	1	1	1	1	1	1	1	1	1
178503	Windshield liner (tonneau) (used on 431-441-451)	..	..	..	1	1	1	..	..	..
185437	Windshield panel				1	1	1	1	1	1
185512	Windshield weatherstrip—tonneau				1	1	1			
183578	Windshield sash and glass assembly	..	..	..	1	1	1	1	1	1
183576	Windshield stanchion—right	..	..	..	1	1	1	1	1	1
181762	Windshield stanchion—right	1	1	1	..	..	..	..	..	..
181761	Windshield stanchion—left	1	1	1	..	..	..	..	..	..
183577	Windshield stanchion—left	..	..	..	1	1	1	1	1	1
180756	Windshield weatherstrip	..	..	..	1	1	1	1	1	1

TRIMMING

178098	Binding imitation leather wire	..	..	x	..	..	x	..	..	x
156689	Binding—1⅛" leather—colonial grain	..	x	x	..	x	x	..	x	x
179414	Binding—1⅛" bias cut imitation colonial leather	x	x	x	x	x	x	x	x	x
156691	Binding—1⅛" leather—imitation colonial grain	x	x	x	x	x	x	x	x	x
156693	Binding leather—colonial grain (double raised center)	..	x	..	..	x	..	..	x	..
156690	Binding leather—imitation colonial grain (DRC)	x	x	x	x	x	x	x	x	x
176578	Binding leather—wire on	..	..	x	..	..	x	..	..	x
176579	Binding leather—wire-on (cordless)	..	..	x	..	..	x	..	.	x
29618	Buckram (2-ply, 38" wide)	x	x	x	x	x	x	x	x	x
29595	Burlap (10-oz., 40" wide)	x	x	x	..	..	..	..	..	..
103840	Carpet—gray horsehair, 36" wide	x	x	x	x	x	x	..	..	..
166901	Carpet—hair	..	..	..	..	..	..	x	x	x
159187	Cord welt ¾ x ¼" colonial leather	x	x	x	x	x	x	x	x	x
156696	Cord welt 11/16 x 3/16" leather—colonial grain	x	x	x	x	x	x	x	x	x
161787	Drill—white cotton—7-oz., 36" wide	x	x	x	x	x	x	x	x	x
105025	Drill—enameled—50" wide—long grain	x	x	x	x	x	x	x	x	x
157364	Fabric—cork-faced (1/32 x 1½" liner)	x	x	x	x	x	x	x	x	x
142820	Fabric—top material (54" wide) (Burbank 0-2 drab)	x	x	x	x	x	x	x	x	x
174513	Fabric—54" filled mole skin	x	x	x	x	x	x	x	x	x
156858	Gimp (½") bias cut imitation leather—colonial grain	x	x	x	x	x	x	x	x	x
156692	Gimp (½") imitation black colonial leather	x	x	x	x	x	x	x	x	x
156857	Gimp (¾") imitation colonial leather	x	x	x	x	x	x	x	x	x
174201	Gimp ½ leather—colonial grain	x	x	x	x	x	x	x	x	x
163172	Kersey felt, 45" wide	x	x	x	x	x	x	x	x	x
159984	Leather—imitation black patent leather finish	x	x	x	x	x	x	x	x	x
123507	Leather—imitation (Textileather Company No. 95153—color .090 or its equivalent)	..	..	..	..	..	..	x	x	x
156346	Leather—imitation colonial grain	x	x	x	x	x	x	x	x	
156348	Leather trimming (colonial grain)	x	x	x	x	x	x	x	x	x
140935	Paper board (½ x 48")	x	x	x	x	x	x	x	x	x
140900	Rubber riser, ¼ half round	x	x	x	x	x	x	x	x	x
108123	Rubber tubing 5/16 O. D. x 3/64" wall	x	x	x	x	x	x	x	x	x
134163	Rubber tubing ⅜ O. D. x 1/16" wall	..	x	x	..	x	x	..	x	x

Piece No.	Name	Number Required 400	410	420	401 431	411 441	421 451	402	412	422
29334	Silesia, brown, 36" wide	x	x	x	x	x	x	x	x	x
29652	Tacks—japanned lace, 2-oz.	x	x	x	x	x	x	x	x	x
106964	Tacks—gimp, 3-oz. japanned	x	x	x	x	x	x	x	x	x
113912	Tacks—gimp, 4-oz. japanned	x	x	x	x	x	x	x	x	x
29657	Tacks—japanned lace, 4-oz.	x	x	x	x	x	x	x	x	x
128467	Tacks—japanned-lace, 8 oz.	x	x	x	x	x	x	x	x	x
29663	Tacks—trimmers 2½ oz. japanned	x	x	x	x	x	x	x	x	x
29664	Tacks—trimmers 4 oz. japanned	x	x	x	x	x	x	x	x	x
29666	Tacks—trimmers 10 oz. japanned	x	x	x	x	x	x	x	x	x
113789	Tacks—gimp 6 oz. japanned	x	x	x	x	x	x	x	x	x
156681	Thread "D" spool silk	x	x	x	x	x	x	x	x	x
29640	Thread "EE" No. 18 or Dean and Sherk No. 12-4	x	x	x	x	x	x	x	x	x
29641	Thread No. 432	x	x	x	x	x	x	x	x	x
127807	Thread—Dean and Sherk No. 24-4 soft finish	x	x	x	x	x	x	x	x	x
127808	Thread—Dean and Sherk No. 20-4 silk finish	x	x	x	x	x	x	x	x	x
157022	Thread—Lincoln No. 6	x	x	x	x	x	x	x	x	x
29627	Wadding 33" blue sheet No. 532	x	x	x	x	x	x	x	x	x
172470	Wadding 4" white cotton unbleached rolled, 5 oz.	x	..	..	x	..	..	x	..	..
128040	Wadding 33" white sheet	..	x	x	..	x	x	..	x	x
177162	Webbing 1" wide cotton (Top stay)	x	x	x	x	x	x	x	x	x
156699	Windlace—colonial leather	x	x	x	x	x	x	x	x	x
159950	Wire screen, 16-mesh, No. 34 wire (12" wide)	x	x	x	x	x	x	x	x	x

packardinfo.com

Printed in U. S. A.

OPEN BODY ATTACHING PARTS

Piece No.	Name	Number Required 460	470	461	471	491	481	462	472
7618	Body to frame bolt No. 1 carriage, 7/16—20 x 3"	2	2	2	2	2	2	2	2
5833	Body to frame bolt No. 2, 7/16—20 x 3 1/8" hex. hd. mach.	2	2	2	2	2	2	2	2
5833	Body to frame bolt No. 3, 7/16—20 x 2 3/4" hex. hd. mach.	..	..	..	..	..	..	2	2
7834	Body to frame bolt No. 3, 7/16—20 x 3 1/8" hex. hd. mach.	2	2	2	2	2	2	..	..
5313	Body to frame bolt No. 3 (7/16—20 x 4 1/4" hex. hd. mach.)	2	2	2	2	2	2	..	..
5791	Body to frame bolt No. 4, 7/16—20 x 3 1/8" flat hd. mach.	2	2	2	2	2	2	..	..
7839	Body to frame bolt No. 4, 7/16—20 x 2 1/2" hex. hd. mach.	..	..	..	..	..	..	2	2
5671	Body to frame bolt No. 5, 7/16—20 x 5 3/8" hex. hd. mach.	2	2	..	..	..	..	2	2
166462	Body to frame bolt No. 5 carriage, 7/16—20 x 7 3/8" skew. hd.	..	..	2	2	2	2	..	..
131809	Body to frame bolt washer—large 7/16" plain—special	2	2	2	2	2	2	6	6
131046	Body to frame bolt washer—small 7/16" plain—special	12	12	10	10	10	10	12	12
5508	Body to frame bolt—lockwasher 7/16"	8	8	8	8	8	8	6	6
5806	Body to frame bolt—lockwasher	2	2	2	2	2	2	4	4
7007	Body to frame bolt—nut 7/16—20 plain	8	8	8	8	8	8	10	10
182439	Body to frame bolt—nut lock	4	4	4	4	4	4	4	4
173486	Body to frame liner (3/16" thick)	x	x	x	x	x	x	x	x
173488	Body to frame liner (3/16" thick)	..	..	..	..	..	..	x	x
175230	Body to frame liner (1/4" thick)	x	x	x	x	x	x	x	x
175231	Body to frame liner (5/16" thick)	x	x	x	x	x	x	x	x
167924	Body to frame liner hand brake lever insulator	1	1	1	1	1	1	1	1
173487	Body hold down bolt bracket liner (3/8" thick)	x	x	x	x	x	x	x	x
183518	Body hold down bolt bracket liner (1/2" thick)	x	x	x	x	x	x	x	x
183517	Body hold down bolt bracket liner (3/16" thick)	x	x	x	x	x	x	x	x
133104	Body hold down bolt bracket liner (1/32" thick)	x	x	x	x	x	x	x	x
180079	Body to frame liner (3/16" thick)	x	x	..	..	..	..	..	..
183519	Body to frame liner (5/16" thick)	x	x	..	..	..	..	..	..
183369	Body to frame liner (3/16" thick)	..	..	x	x	x	x	x	x
183520	Body to frame liner (5/16" thick)	..	..	x	x	x	x	x	x

packardinfo.com

BONNET DASH LINER

139804	Bonnet dash liner (in rolls)	x	x	x	x	x	x	x	x
46527	Rivet (No. 632 9/64 x 1/4" flat hd. tubular)	34	34	34	34	34	34	34	34

CABLES

167069	Body wiring cable—19 strand No. 16 (green braid)	x	x	x	x	x	x	x	x
166406	Body wiring cable—19 strand No. 16 (red braid)	x	x	x	x	x	x	x	x
166404	Body wiring cable—19 strand No. 16 (black braid)	x	x	x	x	x	x	x	x
29254	Body wiring cable staple insulated	x	x	x	x	x	x	x	x
48202	Body wiring cable terminal	..	..	..	..	..	..	x	x
159085	Body wiring cable terminal	x	x	x	x	x	x	..	..
33287	Body wiring cable terminal	x	x	x	x	x	x	x	x
36111	Body wiring cable terminal insulator	x	x	x	x	x	x	x	x

CARPETS

179584	Carpet assembly—folding seat floor	2	2	..	..	..	..	..	..
183199	Carpet assembly—front floor	..	..	1	1	1	1	1	1
183197	Carpet assembly—front floor	1	1	..	..	..	..	..	..
183362	Carpet assembly—rear floor	1	1	..	..	..	..	..	..
183363	Carpet assembly—rear floor	..	..	1	1	1	1	..	..
183299	Carpet assembly—rumble seat compartment	..	..	..	..	..	..	1	1

Piece No.	Name	Number Required 500	510	501	511	521	531
195487	Door rear left assembly trimmed	..	1	..	1	..	1
195488	Door rear right assembly trimmed	1	..	1	..	1	..
195489	Door rear right assembly trimmed	..	1	..	1	..	1

DOOR PARTS

111671	Door bumper	8	8	8	8	8	8
185143	Door check—left	1	1	1	1	1	1
185142	Door check—right	1	1	1	1	1	1
177021	Door check escutcheon plate	2	2	2	2	2	2
183394	Screw (No. 6 x $\frac{3}{8}$" oval hd. mach.)	6	6	6	6	6	6
185235	Door check stop plate assembly—left	1	1	1	1	1	1
185233	Door check stop plate assembly—right	1	1	1	1	1	1
180704	Door curtain carrier rod—left	2	2	..	..	..	..
176125	Door curtain carrier rod—left	..	..	2	2	2	2
180703	Door curtain carrier rod—right	2	2	..	..	..	..
176124	Door curtain carrier rod—right	..	..	2	2	2	2
165759	Door curtain carrier socket	4	4	4	4	4	4
119226	Door dovetail bumper	8	8	8	8	8	8
119245	Door dovetail bumper clip	8	8	8	8	8	8
119297	Door dovetail casing	4	4	4	4	4	4
119296	Door dovetail female retainer	4	4	4	4	4	4
119298	Door dovetail—male	4	4	4	4	4	4
118500	Door hinge	8	8	8	8	8	8
165021	Door lock	4	4	4	4	4	4
173952	Door lock handle	4	4	..	..	..	..
176788	Door lock handle	..	..	4	4	4	4
165015	Door lock lever assembly—left	2	2	2	2	2	2
165014	Door lock lever assembly—right	2	2	2	2	2	2
168020	Door lock lever handle nut	4	4	4	4	4	4
174113	Door lock lever handle—right	2	2	2	2	2	2
174114	Door lock lever handle—left	2	2	2	2	2	2
165541	Door lock lever handle pocket moulding—right	2	2	2	2	2	2
165542	Door lock lever handle pocket moulding—left	2	2	2	2	2	2
174115	Door lock lever and link assembly—front right	1	1	1	1	1	1
174116	Door lock lever and link assembly—front left	1	1	1	1	1	1
173814	Door lock striker—right	2	2	2	2	2	2
174223	Door lock striker—left	2	2	2	2	2	2
193656	Door scuff plate—front left	1	1	1	1	1	1
193655	Door scuff plate—front right	1	1	1	1	1	1
193642	Door scuff plate—rear right	1	1	1	1	1	1
193643	Door scuff plate—rear left	1	1	1	1	1	1

FASTENERS

193199	Snap fastener rivet post—female—carpet	x	x	x	x	x	x
193200	Snap fastener machine screw post—carpet	x	x	x	x	x	x
193201	Snap fastener screw post—carpet	x	x	x	x	x	x
159060	Snap fastener screw stud—carpet	x	x	x	x	x	x
115799	Snap fastener socket—carpet	x	x	x	x	x	x
115798	Snap fastener socket ring—carpet—short prong	x	x	x	x	x	x
115268	Snap fastener machine screw post—single—top curtain	x	x	x	x	x	x
116554	Snap fastener machine screw post—double—top curtain	x	x	x	x	x	x
139157	Snap fastener rivet post—female—door pocket	x	x	x	x	x	x
139160	Snap fastener rivet post—male—long—door pocket	x	x	x	x	x	x
139157	Snap fastener rivet post—female—top curtain	x	x	x	x	x	x
139158	Snap fastener rivet post—male—top curtain	x	x	x	x	x	x
148637	Snap fastener rivet post—male—top curtain	x	x	x	x	x	x
112058	Snap fastener screw post—top curtain	x	x	x	x	x	x
139150	Snap fastener socket—female—door pocket	x	x	x	x	x	x
76926	Snap fastener socket—female—top curtain	x	x	x	x	x	x
139150	Snap fastener socket—female—top curtain	x	x	x	x	x	x
139159	Snap fastener socket—top—door panel	x	x	x	x	x	x
76925	Snap fastener socket—male—short prong—top curtain	x	x	x	x	x	x

packardinfo.com

Piece No.	Name	Number Required 500	510	501	511	521	531
139159	Snap fastener top top curtain	x	x	x	x	x	x
116446	Snap fastener wood screw post double top curtain	x	x	x	x	x	x
106755	Snap fastener wood screw post -single top curtain	x	x	x	x	x	x

FLOOR BOARD

185702	Floor board front assembly			1	1	1	1
185703	Floor board front assembly	1	1				
185705	Floor board -front filler	1	1				
185704	Floor board front filler			1	1	1	1
195242	Floor board -front felt—center	1	1	1	1	1	1
187634	Floor board -front felt—front center			1	1	1	1
187631	Floor board -front felt—front side			2	2	2	2
185709	Floor board -front felt -rear			1	1	1	1
187632	Floor board -front felt—side			2	2	2	2
187633	Floor board -front felt -side	2	2				
183297	Floor board -rear assembly	1	1				

FOLDING SEAT

193960	Folding seat -trimmed assembly	2					
193961	Folding seat -trimmed assembly		2				
187498	Folding seat—untrimmed assembly		2				
187497	Folding seat - untrimmed assembly	2					
169102	Folding seat back—untrimmed assembly		2				
167945	Folding seat back to seat frame screw	4	4				
187417	Folding seat floor plate	1	1				
171692	Folding seat frame assembly		2				
169788	Folding seat frame assembly	2					
5580	Screw (No. 10—32 x 1" flat hd. mach.)	16	16				
5229	Screw ($\frac{1}{4}$—28 x 1$\frac{3}{8}$" flat hd. mach.)	8	8				
8220	Screw ($\frac{1}{4}$—28 x 1$\frac{1}{2}$" flat hd. mach.)	8	8				
7003	Nut (No. 10—32)	16	16				
7004	Nut ($\frac{1}{4}$"—28)	16	16				
3867	Washer ($\frac{3}{16}$")	4	4				
169779	Folding seat frame side—left	2					
171698	Folding seat frame side—left		2				
169778	Folding seat frame side—right	2					
171703	Folding seat frame side—right		2				
184024	Folding seat handle	2	2				
100100	Folding seat pivot pin	4	4				
187421	Folding seat pivot pin retainer	2	2				
8204	Screw ($\frac{1}{4}$—28 x 2" flat hd. mach.)	4	4				
187410	Folding seat support—left		2				
187408	Folding seat support -left	2					
187409	Folding seat support—right	2					
187411	Folding seat support—right		2				
130869	Folding seat support to seat frame screw	4	4				
7006	Nut ($\frac{3}{8}$"—24)	4	4				
5506	Lockwasher	4	4				

FOOT REST

139030	Foot rest assembly			1		1	
163745	Foot rest assembly				1		1
163743	Foot rest assembly		1				
79574	Foot rest assembly	1					
122146	Foot rest pivot stud	2		2		2	
147963	Foot rest pivot stud		2				
180134	Nut			2			2

FRONT SEAT

179717	Front seat—left frame carrier bracket	1	1	1	1	1	1
4242	Rivet ($\frac{3}{16}$ x $\frac{1}{2}$")	10	10	10	10	10	10

packardinfo.com

Piece No.	Name	Number Required 500	510	501	511	521	531
180842	Front seat—left locking stud	1	1	1	1	1	1
183528	Front seat—left locking spring	1	1	1	1	1	1
180666	Front seat—left operating spring	1	1	1	1	1	1
180845	Front seat—left support bar assembly	1	1	1	1	1	1
180844	Front seat—left support bar handle	1	1	1	1	1	1

INSTRUMENT BOARD

193500	Instrument board assembly	1	1	1	1	1	1
193866	Instrument board compartment door frame assembly—right	1	1	1	1	1	1
193867	Instrument board compartment door frame assembly—left	1	1	1	1	1	1
5724	Screw (No. 8—32 x 3/8" oval hd. mach.)	4	4	4	4	4	4
5860	Washer (No. 8)	4	4	4	4	4	4
185893	Instrument board compartment door anti-rattler	2	2	2	2	2	2
180307	Instrument board compartment door hinge assembly	2	2	2	2	2	2
5859	Rivet (3/16 x 3/16" tub. rnd. hd.)	4	4	4	4	4	4
187495	Instrument board compartment door knob	2	2	2	2	2	2
5569	Screw (No. 10—32 x 1/2" fill. hd. mach.)	2	2	2	2	2	2
5500	Lockwasher (1/4")	2	2	2	2	2	2
184761	Instrument board compartment door panel assembly—right	1	1	1	1	1	1
184762	Instrument board compartment door panel assembly—left	1	1	1	1	1	1
105029	Instrument board compartment door spring dowel	2	2	2	2	2	2
180301	Instrument board compartment door striker plate	2	2	2	2	2	2
141649	Rivet (3/16 x 1/4" rnd. hd. tub.)	4	4	4	4	4	4
190674	Instrument board steering post bracket support	1	1	1	1	1	1
5764	Screw (1/4—28 x 3/4" oval hd. mach.)	2	2	2	2	2	2
7870	Screw (1/4—28 x 5/8" hex. hd. mach.)	2	2	2	2	2	2
3868	Washer (1/4")	2	2	2	2	2	2
5502	Lockwasher (1/4")	4	4	4	4	4	4
7004	Nut (1/4"—28)	2	2	2	2	2	2
187416	Instrument board steering post bracket support liner	1	1	1	1	1	1

PANELS

193410	Panel—cowl assembly	1	1	1	1	1	1
187357	Panel—dash assembly	1	1	1	1	1	1
187787	Panel—dash cover assembly	1	1	1	1	1	1
185690	Panel—dash interliner	1	1	1	1	1	1
185610	Panel—dash liner	1	1	1	1	1	1
193400	Panel—door front right assembly	1	1	1	1	1	1
193401	Panel—door front left assembly	1	1	1	1	1	1
193402	Panel—door rear right assembly	1	1	1	1	1	1
193403	Panel—door rear left assembly	1	1	1	1	1	1

REAR VIEW MIRROR

176816	Rear view mirror assembly	1	1	1	1	1	1
5589	Screw (No. 10—32 x 1/2" rnd. hd.)	2	2	2	2	2	2
163885	Nut (No. 10—32 blind special)	2	2	2	2	2	2
191368	Rear view mirror glass	1	1	1	1	1	1

ROBE RAIL

174501	Robe rail assembly	1	1	1	1		

SEAT CUSHION AND SPRINGS

193507	Seat back spring—front right	1		1		1	
193602	Seat back spring—front right		1		1		1
193603	Seat back spring—front left		1		1		1
193581	Seat back spring—front left	1		1		1	
193792	Seat back spring—rear	1					

packardinfo.com

Piece No.	Name	Number Required 500	510	501	511	521	531
193791	Seat back spring—rear		1				
193665	Seat back spring—rear			1		1	
193664	Seat back spring—rear				1		1
193860	Seat cushion assembly—front left	1		1		1	
193861	Seat cushion assembly—front left		1		1		1
193862	Seat cushion assembly—front right	1		1		1	
193863	Seat cushion assembly—front right		1		1		1
193874	Seat cushion assembly—rear	1					
193875	Seat cushion assembly—rear		1				
193876	Seat cushion assembly—rear			1		1	
193877	Seat cushion assembly—rear				1		1
183280	Seat cushion spring—front left	1	1	1	1	1	1
183259	Seat cushion spring—front right	1	1	1	1	1	1
193667	Seat cushion spring—rear			1		1	
185785	Seat cushion spring—rear	1					
193666	Seat cushion spring—rear				1		1
187522	Seat cushion spring—rear		1				
172294	Seat cushion spring—folding seat	2	2				

SPOTLIGHT

185301	Spotlight assembly	1	1	1	1	1	1
102507	Spotlight cable grommet	1	1	1	1	1	1
187910	Spotlight bracket	1	1	1	1	1	1

TONNEAU COWL

178705	Tonneau cowl trimmed assembly					1	1
176786	Tonneau cowl bumper					2	2
176314	Tonneau cowl clamp					2	2
176315	Tonneau cowl clamp bracket and bumper retainer					2	2
176288	Tonneau cowl counterbalance assembly					2	2
176638	Tonneau cowl counterbalance screw—lower					2	2
177006	Tonneau cowl counterbalance screw—upper					2	2
176657	Tonneau cowl counterbalance bracket—lower					2	2
176289	Tonneau cowl counterbalance spring					2	2
176312	Tonneau cowl hinge female—right					1	1
176313	Tonneau cowl hinge female—left					1	1
5595	Screw ($^3/_8$—24 x $1\,^3/_4$" hex. hd. mach.)					4	4
5506	Lockwasher ($^3/_8$")					4	4
176658	Tonneau cowl hinge male—right					1	1
176659	Tonneau cowl hinge male—left					1	1
176318	Tonneau cowl hinge screw					2	2

TONNEAU LIGHT

180645	Tonneau light assembly	2	2	2	2	2	2
102590	Tonneau light bulb 7 V. 3 C-P. G-6 single contact	2	2	2	2	2	2
180646	Tonneau light glass and rim	2	2	2	2	2	2
180647	Tonneau light reflector	2	2	2	2	2	2
185031	Tonneau light switch	2	2	2	2	2	2
127502	Tonneau light switch plunger plate	2	2	2	2	2	2

TONNEAU VENTILATOR

176296	Tonneau ventilator cover assembly—left					1	1
176650	Tonneau ventilator cover assembly—right					1	1
176301	Tonneau ventilator cover spring					2	2
4153	Tonneau ventilator hinge rivet ($^3/_{16}$ x $^7/_{16}$" rnd. hd.)					4	4
176304	Tonneau ventilator knob					2	2
176300	Tonneau ventilator screen					2	2

packardinfo.com

TOOL COMPARTMENT

Piece No.	Name	Number Required 500	510	501	511	521	531
139035	Tool compartment door assembly			1	1	1	1
139046	Tool compartment door hinge			1	1	1	1
148304	Tool compartment door lock			1	1	1	1
111568	Tool compartment door lock striker			1	1	1	1

TOP

193612	Top assembly	1	1				
176100	Top assembly			1	1	1	1
176105	Top bow No. 1			1	1	1	1
176133	Top bow No. 1	1	1				
180326	Top bow No. 2	1	1				
176106	Top bow No. 2			1	1	1	1
193496	Top bow No. 3	1	1				
193497	Top bow No. 3			1	1	1	1
193450	Top bow No. 3 auxiliary bow	1	1	1	1	1	1
176104	Top bow—front	1	1	1	1	1	1
193610	Top bow slat assembly—right	1	1				
176102	Top bow slat assembly—right			1	1	1	1
193611	Top bow slat assembly—left	1	1				
176103	Top bow slat assembly—left			1	1	1	1
193506	Top bow support assembly—left			1	1	1	1
193513	Top bow support assembly—left	1	1				
193505	Top bow support assembly—right			1	1	1	1
193512	Top bow support assembly—right	1	1				
176688	Top bow support strap assembly	2	2	2	2	2	2
193797	Top door curtain—front left assembly	1	1				
193799	Top door curtain—front left assembly			1	1	1	1
193798	Top door curtain—front right assembly	1	1				
193800	Top door curtain—front right assembly			1	1	1	1
193802	Top door curtain—rear right assembly	1	1				
193804	Top door curtain—rear right assembly			1	1	1	1
193801	Top door curtain—rear left assembly	1	1				
193803	Top door curtain—rear left assembly			1	1	1	1
193805	Top envelope assembly	1	1				
193806	Top envelope assembly			1	1		
164249	Top rear curtain window	1	1	1	1	1	1
193808	Top rear seat curtain—right assembly	1	1				
193810	Top rear seat curtain—right assembly			1	1	1	1
193807	Top rear seat curtain—left assembly	1	1				
193809	Top rear seat curtain—left assembly			1	1	1	1
164198	Top support bracket nut	2	2	2	2	2	2
164199	Top support bracket nut lock	2	2	2	2	2	2
163765	Top to windshield clamp nut	2	2	2	2	2	2
175659	Top to windshield clamp bracket assembly—right	1	1	1	1	1	1
175660	Top to windshield clamp bracket assembly—left	1	1	1	1	1	1
176498	Top to windshield weatherstrip assembly	1	1	1	1	1	1

VENTILATOR

193814	Ventilator cover assembly	1	1	1	1	1	1
137537	Ventilator cover hinge screw	2	2	2	2	2	2
3868	Washer (1/4" plain)	2	2	2	2	2	2
7104	Nut (1/4"—28 castle)	2	2	2	2	2	2
4280	Pin (1/16 x 1/2" cotter)	2	2	2	2	2	2
185776	Ventilator cover operating lever	1	1	1	1	1	1
7800	Screw (1/4—28 x 1" hex. hd. mach.)	2	2	2	2	2	2
5502	Lockwasher (1/4")	2	2	2	2	2	2
7004	Nut (1/4"—28)	2	2	2	2	2	2
3868	Washer (1/4" plain)	2	2	2	2	2	2

packardinfo.com

Printed in U. S. A.

Piece No.	Name	Number Required 500	510	501	511	521	531
118555	Ventilator cover operating lever pin	1	1	1	1	1	1
118771	Ventilator cover operating pin roller	1	1	1	1	1	1
4280	Pin ($\frac{1}{16}$ x $\frac{1}{2}$" cotter)	1	1	1	1	1	1
187192	Ventilator cover operating lever ratchet	1	1	1	1	1	1
5792	Ventilator cover operating lever ratchet yoke end pin ($\frac{5}{16}$" std.)	1	1	1	1	1	1
4290	Pin ($\frac{3}{32}$ x $\frac{5}{8}$" cotter)	1	1	1	1	1	1
138261	Ventilator cover spring	1	1	1	1	1	1
145383	Ventilator hinge adjusting plate assembly—left	1	1	1	1	1	1
145384	Ventilator hinge adjusting plate assembly—right	1	1	1	1	1	1
187137	Ventilator screen assembly	1	1	1	1	1	1
185800	Ventilator side door gutter and operating lever bracket assembly—right	1	1	1	1	1	1
185799	Ventilator side door gutter and operating lever bracket assembly—left	1	1	1	1	1	1
185798	Ventilator side door and hinge assembly—right	1	1	1	1	1	1
185797	Ventilator side door and hinge assembly—left	1	1	1	1	1	1
185794	Ventilator side door hinge—right	1	1	1	1	1	1
185793	Ventilator side door hinge—left	1	1	1	1	1	1
185893	Ventilator side door hinge bumper	2	2	2	2	2	2
185809	Ventilator side door hinge pin	2	2	2	2	2	2
4690	Pin spring cotter ($\frac{1}{16}$ x $\frac{3}{8}$")	2	2	2	2	2	2
185807	Ventilator side door operating lever	2	2	2	2	2	2
5982	Pin $\frac{3}{16}$" yoke end—short	2	2	2	2	2	2
5981	Pin $\frac{3}{16}$" yoke end—long	2	2	2	2	2	2
4690	Pin spring cotter ($\frac{1}{16}$ x $\frac{3}{8}$")	4	4	4	4	4	4
190192	Spring washer	2	2	2	2	2	2
187753	Ventilator side door operating lever handle	2	2	2	2	2	2
185801	Ventilator side door operating lever plunger	2	2	2	2	2	2
185808	Ventilator side door operating spring	2	2	2	2	2	2
185811	Ventilator side screen assembly	2	2	2	2	2	2
185814	Ventilator side weatherstrip	2	2	2	2	2	2
187126	Ventilator weatherstrip retainer assembly	1	1	1	1	1	1
185938	Ventilator weatherstrip	1	1	1	1	1	1

packardinfo.com

WINDSHIELD

193523	Windshield assembly	1	1				
193342	Windshield assembly			1	1	1	1
193526	Windshield assembly (tonneau)					1	1
5753	Windshield to body screw ($\frac{5}{16}$—24 x $1\frac{7}{8}$" hex. hd.)	8	8	8	8	8	8
3909	Washer ($\frac{5}{16}$")	8	8	8	8	8	8
5504	Washer ($\frac{5}{16}$")	8	8	8	8	8	8
193653	Windshield cleaner to dash connection tube assembly	1	1	1	1	1	1
157688	Windshield cleaner to dash connection tube flared tube connection adapter	1	1	1	1	1	1
143360	Windshield cleaner to dash connection tube clip—single	1	1	1	1	1	1
5667	Screw (No. 10—32 x $\frac{5}{8}$" rnd. hd. mach.)	1	1	1	1	1	1
5500	Lockwasher (No. 10)	1	1	1	1	1	1
132878	Windshield cleaner hose	1	1	1	1	1	1
141305	Windshield cleaner hose	1	1	1	1	1	1
164153	Windshield cleaner motor—complete	1	1	1	1	1	1
164283	Windshield cleaner motor attaching screw	2	2	2	2	2	2
164282	Windshield cleaner motor spacer	2	2	2	2	2	2
164155	Windshield cleaner wiper—complete	1	1	1	1	1	1
164277	Windshield cleaner wiper arm screw	1	1	1	1	1	1
164280	Windshield cleaner wiper attaching nut	1	1	1	1	1	1
178504	Windshield to cowl liner	1	1	1	1	1	1
176784	Windshield glass			1	1	1	1
181019	Windshield glass	1	1				
193465	Windshield glass (tonneau)					1	1
194927	Windshield panel—complete	1	1				
194928	Windshield panel—complete			1	1	1	1
194926	Windshield pivot lower screw	2	2	2	2	2	2
194929	Windshield sash and glass	1	1				

Piece No.	Name	Number Required 500	510	501	511	521	531
194930	Windshield sash and glass			1	1	1	1
194920	Windshield stanchion right	1	1				
194921	Windshield stanchion left	1	1				
194922	Windshield stanchion right			1	1	1	1
194923	Windshield stanchion left			1	1	1	1
194924	Windshield wing nut—lower	2	2	2	2	2	2
194925	Windshield wing nut—upper	2	2	2	2	2	2

TRIMMING

156689	Binding ($1\frac{1}{8}$") leather colonial grain	x	x	x	x	x	x
176578	Binding leather wire—on colonial grain	x	x	x	x	x	x
192088	Binding imitation leather wire—on colonial grain	x		x		x	
29618	Buckram (2 ply 38" wide)	x	x	x	x	x	x
103840	Carpet—grey horse hair (36" wide)	x	x	x	x	x	x
33883	Celluloid—side curtain lights (20 x 36")	x	x	x	x	x	x
29651	Cloth—cotton (36" wide)	x	x				
182894	Cord ($\frac{1}{4}$") twisted paper		x		x		x
159187	Cord welt ($\frac{3}{4}$ x $\frac{1}{4}$") colonial leather	x	x	x	x	x	x
182627	Cord welt leather colonial grain ($\frac{21}{32}$ x $\frac{5}{32}$")	x		x		x	
161787	Drill white cotton—7 oz. (36" wide)	x	x	x	x	x	x
105025	Drill enameled (50" wide) long grain	x	x	x	x	x	x
195226	Fabric—top material (54" wide) (Burbank 1220 drab)	x	x	x	x	x	x
174513	Fabric (54") filled moleskin	x	x	x	x	x	x
170310	Gimp ($\frac{1}{2}$") leather colonial grain	x	x	x	x	x	x
156858	Gimp ($\frac{1}{2}$") bias cut imitation leather colonial grain	x		x		x	
156692	Gimp ($\frac{1}{2}$") imitation black colonial leather	x	x	x	x	x	x
156857	Gimp ($\frac{3}{4}$") bias cut imitation leather colonial grain	x		x		x	
175234	Gimp ($\frac{3}{4}$") leather colonial grain		x		x		x
159984	Leather—imitation black patent leather finish	x	x	x	x	x	x
156346	Leather—imitation colonial grain	x	x	x	x	x	x
156348	Leather trimming—colonial grain	x	x	x	x	x	x
192303	Muslin—rubber (54" wide)	x	x	x	x	x	x
140935	Paper board ($\frac{1}{2}$ x 48")	x	x	x	x	x	x
184236	Rubber riser ($\frac{3}{16}$" half round)	x	x	x	x	x	x
115023	Rubber riser ($\frac{3}{8}$" half oval)	x	x	x	x	x	x
140900	Rubber riser ($\frac{1}{4}$" half round)	x	x	x	x	x	x
176545	Strip—panel trim tacking	x	x	x	x	x	x
29652	Tacks—japanned lace (2 oz.)	x	x	x	x	x	x
106964	Tacks—gimp (3 oz.) japanned	x	x	x	x	x	x
113812	Tacks—gimp (4 oz.) japanned	x	x	x	x	x	x
29657	Tacks—japanned lace (4 oz.)	x	x	x	x	x	x
29663	Tacks—trimmers ($2\frac{1}{2}$ oz.) japanned	x	x	x	x	x	x
29664	Tacks—trimmers (4 oz.) japanned	x	x	x	x	x	x
29666	Tacks—trimmers (10 oz.) japanned	x	x	x	x	x	x
113789	Tacks—gimp (6 oz.) japanned	x	x	x	x	x	x
156681	Thread—"D" spool silk	x	x	x	x	x	x
29640	Thread—"EE" No. 18 or Dean and Sherk No. 12-4	x	x	x	x	x	x
127808	Thread—Dean and Sherk No. 20-A silk finish	x	x	x	x	x	x
157586	Thread—No. 1201 cord		x		x		x
29625	Twine—No. 252 Yazoo			x	x	x	x
192208	Wadding—3" white cotton rolled ($3\frac{1}{2}$ oz.)	x		x		x	
29627	Wadding—33" blue sheet No. 532	x	x	x	x	x	x
182687	Wadding—32" white unbleached No. 532	x	x	x	x	x	x
192209	Wadding—5" white cotton rolled (6 oz.)	x		x		x	
128040	Wadding—33" white sheet				x		x
62759	Webbing—3" wide jute	x	x	x	x	x	x
172470	Wadding—4" white cotton unbleached rolled (5 oz.)	x	x	x	x	x	x
148742	Windlace—leather colonial grain	x	x	x	x	x	x
159950	Wire screen—16 mesh No. 34 wire (12" wide)	x	x	x	x	x	x

packardinfo.com

ENCLOSED BODY ATTACHING PARTS

Piece No.	Name	Number Required 403	413 423	404 414 424	405 415 425	406 416 426	407 417 427	408 418 428	409 419 429
7618	Body to frame bolt No. 1 carriage ($\frac{7}{16}$—20 x 3″)	2	2	2	2	2	2	2	2
7834	Body to frame bolt No. 2 ($\frac{7}{16}$—20 x 3$\frac{1}{8}$″ hex. hd. mach.)	2	2	2	2	2	..	2	2
7839	Body to frame bolt No. 2 ($\frac{7}{16}$—20 x 2$\frac{1}{2}$″ hex. hd. mach.)	..	..	..	..	..	2	..	..
5453	Body to frame bolt No. 3 ($\frac{7}{16}$—20 x 2$\frac{7}{8}$″ flat hd. mach.)	2	..	..	..	..	..	..	..
5791	Body to frame bolt No. 3 ($\frac{7}{16}$—20 x 3$\frac{1}{8}$″ flat hd. mach.)	..	2	..	..	2	2	2	2
7834	Body to frame bolt No. 3 ($\frac{7}{16}$—20 x 3$\frac{1}{8}$″ hex. hd. mach.)	..	..	2	2	..	..	..	..
5453	Body to frame bolt No. 4 ($\frac{7}{16}$—20 x 2$\frac{7}{8}$″ flat hd. mach.)	..	2	2	2	2	..	..	..
7839	Body to frame bolt No. 4 ($\frac{7}{16}$—20 x 2$\frac{1}{2}$″ hex. hd. mach.)	..	..	..	..	..	..	2	2
7886	Body to frame bolt No. 4 ($\frac{7}{16}$—20 x 1$\frac{3}{4}$″ hex. hd. mach.)	2	..	..	..	..	..	..	..
7834	Body to frame bolt No. 4 ($\frac{7}{16}$—20 x 3$\frac{1}{8}$″ hex. hd. mach.)	..	..	..	..	..	2	..	..
7886	Body to frame bolt No. 5 ($\frac{7}{16}$—20 x 1$\frac{3}{4}$″ hex. hd. mach.) (used on 413-404-414-405-415-407-417)	..	2	2	2	..	2	..	..
5740	Body to frame bolt No. 5 ($\frac{7}{16}$—20 x 2″ hex. hd. mach.) (used on 408-418-409-419)	..	..	..	..	..	..	2	2
175578	Body to frame bolt No. 5 carriage ($\frac{7}{16}$—20 x 3$\frac{5}{8}$″ skew hd.) (used on 406-416)	..	..	..	..	2	..	..	..
5671	Body to frame bolt No. 5 ($\frac{7}{16}$—20 x 5$\frac{3}{8}$″ hex. hd. mach.) (used on 423-424-425-427-428-429)	..	2	2	2	..	2	2	2
166462	Body to frame bolt No. 5 carriage ($\frac{7}{16}$—20 x 7$\frac{3}{8}$″ skew hd.) (used on 426)	..	..	..	..	2	..	..	..
131809	Body to frame bolt washer—large ($\frac{7}{16}$″ plain—special)	2	2	4	4	2	4	4	4
131046	Body to frame bolt washer—small ($\frac{7}{16}$″ plain—special)	10	12	10	10	10	12	12	12
5508	Body to frame bolt lock washer ($\frac{7}{16}$″)	8	10	10	10	10	10	10	10
7007	Body to frame bolt nut ($\frac{7}{16}$″—20 plain)	8	10	8	8	10	10	10	10
175676	Body to frame bolt bracket—nut	..	..	2	2	..	..	..	..
173485	Body to frame liner ($\frac{3}{16}$″ thick)	4	4	4	4	4	4	4	4
173488	Body to frame liner ($\frac{3}{16}$″ thick)	4	4	4	4	4	4	4	4
175230	Body to frame liner ($\frac{1}{4}$″ thick)	x	x	x	x	x	x	x	x
175231	Body to frame liner ($\frac{5}{16}$″ thick)	x	x	x	x	x	x	x	x
167924	Body to frame liner hand brake lever insulator	1	1	1	1	1	1	1	
173487	Body hold down bolt bracket liner—thick	..	2	2	2	2	2	2	2
176760	Frame rear end splasher to body liner (used on 423-424-425-526-427-428-429)	..	x	x	x	x	x	x	x
5475	Screw (No. 4—40 x $\frac{5}{16}$″ flat hd. mach.) (used on 426-423)	..	2	..	..	2	..	..	..
33170	Wood screw ferrule No. 4 (used on 423-424-426-425-427-428-429)	..	9	9	9	9	10	10	10
175763	Screw (No. 4—$\frac{3}{8}$″ flat hd.) (used on 424-425-427-428-429)	..	..	9	9	..	2	2	2

ARM REST AND ARM SLING

173628	Arm rest (trimmed) assembly (folding) (used on 423-424-425-426-427)	..	1	1	1	1	1	..	..
162176	Arm rest bracket right assembly (folding) (used on 423-424-425-426-427)	..	1	1	1	1	1	..	..
162177	Arm rest bracket left assembly (folding) (used on 423-424-425-426-427)	..	1	1	1	1	1	..	..
170975	Arm rest—rosette (used on 404-405-406-407)	..	..	2	2	2	2	..	..
173515	Arm rest—rosette (used on 413-423-414-424-415-425-416-426-417-427)	..	2	2	2	2	2	..	..
170976	Arm rest—rosette	2	..	..	..	..	..	..	..
170652	Arm rest smoking case ash receiver (used on 403-413-423-404-405-407-417)	1	1	1	1	..	1	..	..
172130	Arm rest smoking case cigar lighter—complete (used on 403-413-423-404-405-407-417)	1	1	1	1	..	1	..	..
172131	Arm rest smoking case cigar lighter tip (used on 403-413-423-404-405-407-417)	1	1	1	1	..	1	..	..
170655	Arm rest—vanity case—mirror (used on 403-413-423-404-405-407-417)	1	1	1	1	..	1	..	..
170656	Arm rest—vanity case memorandum book (used on 403-413-423-404-405-407-417)	1	1	1	1	..	1	..	..
140942	Arm rest—vanity case memorandum book pencil (used on 403-413-423-404-405-407-417)	1	1	1	1	..	1	..	..

packardinfo.com

Piece No.	Name	Number Required 403	413 423	404 414 424	405 415 425	406 416 426	407 417 427	408 418 428	409 419 429
173649	Arm sling (used on 423 424-425-426)	..	2	2	2	2	..	..	..
175995	Arm sling rod (used on 426)	..	..	..	..	2	..	..	..
175996	Arm sling rod bracket (used on 426)	..	..	..	..	4	..	..	..
8016	Screw (No. 6—40 x $\frac{3}{8}$" oval hd. mach.) (used on 426)	..	..	..	..	4	..	..	..
171899	Arm sling rod—left (used on 423-424-425)	..	1	1	1	..	..	..	..
173490	Arm sling rod—right (used on 423-424-425)	..	1	1	1	..	..	..	..

BONNET DASH LINER

139804	Bonnet dash liner (in rolls)	x	x	x	x	x	x	x	x
46527	Rivet (No. 632—$\frac{9}{64}$ x $\frac{1}{4}$" flat hd. tubular)	34	34	34	34	34	34	34	34

CABLES

167069	Body wiring cable—19 strand No. 16 (green braid)	x	x	x	x	x	x	x	x
166406	Body wiring cable—19 strand No. 16 (red braid)	x	x	x	x	x	x	x	x
166404	Body wiring cable—19 strand No. 16 (black braid)	x	x	x	x	x	x	x	x
166405	Body wiring cable—19 strand No. 16 (black with red tracer braid)	..	..	..	x	..	..	..	..
29254	Body wiring cable staple insulated	x	x	x	x	x	x	x	x
48202	Body wiring cable terminal	x	x	x	x	x	x	x	x
33287	Body wiring cable terminal	x	x	x	x	x	x	x	x
36111	Body wiring cable terminal insulator	x	x	x	x	x	x	x	x

CARPETS

171693	Carpet assembly—folding seat floor—left (used on 404-414-405-415) (with folding seat support 9" long from center to center)	..	..	1	1	..	..	..	..
172696	Carpet assembly—folding seat floor—left (used on 424-425) (with folding seat support 9" long from center to center)	..	..	1	1	..	..	..	..
171694	Carpet assembly—folding seat floor—right (used on 404-414-405-415) (with folding seat support 9" long from center to center)	..	..	1	1	..	..	..	..
172695	Carpet assembly—folding seat floor—right (used on 424-425) (with folding seat support 9" long from center to center)	..	..	1	1	..	..	..	..
179586	Carpet assembly—folding seat floor—(404-405-414-415) (with folding seat support $7\frac{15}{16}$" long from center to center)	..	..	2	2	..	..	..	..
179599	Carpet assembly—folding seat floor—(424-425) (with folding seat support $7\frac{15}{16}$" long from center to center)	..	..	2	2	..	..	..	..
171047	Carpet assembly front floor	1	1	1	1	1	..	1	1
175110	Carpet assembly—front floor (not used with folding seat)	..	..	..	..	..	1	..	..
179622	Carpet assembly—front floor (used with folding seat)	..	..	..	..	..	1	..	..
171545	Carpet assembly—rear floor	1	..	..	..	..	..	..	..
170979	Carpet assembly—rear floor (used on 407) (not used with folding seat)	..	..	..	..	..	1	..	..
179626	Carpet assembly—rear floor (used on 407-417) (used with folding seat)	..	..	..	..	..	1	..	..
171546	Carpet assembly—rear floor (used on 404-405)	..	..	1	1	..	..	..	..
173529	Carpet assembly—rear floor (424-425)	..	..	1	1	..	..	..	..
170978	Carpet assembly—rear floor (used on 417) (not used with folding seat)	..	..	..	..	..	1	..	..
175766	Carpet assembly—rear floor (used on 427) (not used with folding seat)	..	..	..	..	..	1	..	..
179628	Carpet assembly—rear floor (used on 427) (used with folding seat)	..	..	..	..	..	1	..	..
171695	Carpet assembly—rear floor (used on 414-415)	..	..	1	1	..	..	..	..
175973	Carpet assembly—rear floor (used on 423)	..	1	..	..	..	..	..	..
175972	Carpet assembly—rear floor (used on 413)	..	1	..	..	..	..	..	..
175228	Carpet assembly—rear floor (used on 426)	..	..	..	..	1	..	..	..
171548	Carpet assembly—rear floor (used on 406)	..	..	..	..	1	..	..	..
171697	Carpet assembly—rear floor (used on 416)	..	..	..	..	1	..	..	..
173624	Carpet assembly—rumble seat compartment floor	..	..	..	..	..	..	1	1
172754	Carpet assembly—rear compartment floor	..	..	..	..	..	1	..	..

packardinfo.com

DICTOGRAPH

Piece No.	Name	Number Required 403	413 423	404 414 424	405 415 425	406 416 426	407 417 427	408 418 428	409 419 429
147649	Dictograph receiver	..	..	..	1	..	..	..	..
175113	Dictograph transmitter bracket	..	..	..	1	..	..	..	..
175826	Dictograph transmitter and winder assembly	..	..	..	1	..	..	..	..

DOME LIGHT

148195	Dome light (used on 403-404-405-406-407-408)	1	..	1	1	1	1	1	..
170990	Dome light (used on 413-423-414-424-415-425-416-426-417-427-418-428) (ivory inlay)	..	1	1	1	1	1	1	..
178500	Dome light (used on 413-414-415-416-417-418-423-424-425-426-427-428) (green tint)	..	1	1	1	1	1	1	..
102585	Dome light bulb (Mazda No. 81) 6 C-P. G-6	1	1	1	1	1	1	1	..
148196	Dome light glass and rim (used on 403-404-405-406-407-408)	1	..	1	1	1	1	1	..
171526	Dome light glass and rim (used on 413-423-414-424-415-425-416-426-417-427-418-428) (ivory inlay)	..	1	1	1	1	1	1	..
178513	Dome light glass and rim (used on 413-423-414-424-415-425-416-426-417-427-418-428) (green tint inlay)	..	1	1	1	1	1	1	..
173963	Dome light reflector (used on 413-423-414-424-415-425-416-426-417-427-418-428)	..	1	1	1	1	1	1	..
148197	Dome light reflector (used on 403-404-405-406-407-408)	1	..	1	1	1	1	1	..
148199	Dome light switch (used on 403-404-406-407-408)	1	..	1	..	1	1	1	..
170997	Dome light switch (used on 413-423-414-424-416-426-417-427-418-428)	..	1	1	..	1	1	1	..
141645	Dome light switch—front (3 point)	..	..	..	1	..	..	..	..
148198	Dome light switch—rear (3 point) (used on 405)	..	..	..	1	..	..	..	..
170998	Dome light switch—rear (3 point) (used on 415-425)	..	..	..	1	..	..	..	..

packardinfo.com

DOORS

All doors must be adjusted to each respective body.

To obtain a satisfactory replacement of doors, it is advisable to return the damaged door to be repaired, if possible. If this cannot be done, the customer assumes the responsibility of the new door being a satisfactory fit.

Specify on all orders the upholstery material, color of paint and striping.

176988	Door front right trimmed assembly (used on 403-4-6-7)	1	..	1	..	1	1	..	..
176989	Door front right trimmed assembly (used on 405-415)	..	..	..	1	..	..	..	..
177041	Door front right trimmed assembly (used on 408)	..	..	..	..	..	..	1	..
177044	Door front right trimmed assembly (used on 409-419)	..	..	..	..	..	..	..	1
176987	Door front right trimmed assembly (used on 413-4-6-7)	..	1	1	..	1	1	..	..
177042	Door front right trimmed assembly (used on 418)	..	..	..	..	..	..	1	..
176986	Door front right trimmed assembly (used on 423-4-6-7)	..	1	1	..	1	1	..	..
177040	Door front right trimmed assembly (used on 425)	..	..	..	1	..	..	..	..
177043	Door front right trimmed assembly (used on 428)	..	..	..	..	..	..	1	..
177045	Door front right trimmed assembly (used on 429)	..	..	..	..	..	..	..	1
177050	Door front left trimmed assembly (used on 403-4-6-7)	1	..	1	..	1	1	..	..
177051	Door front left trimmed assembly (used on 405-415)	..	..	..	1	..	..	..	..
177053	Door front left trimmed assembly (used on 408)	..	..	..	..	..	..	1	..
177056	Door front left trimmed assembly (used on 409-419)	..	..	..	..	..	..	..	1
177049	Door front left trimmed assembly (used on 413-4-6-7)	..	1	1	..	1	1	..	..
177054	Door front left trimmed assembly (used on 418)	..	..	..	..	..	..	1	..
177048	Door front left trimmed assembly (used on 423-4-6-7)	..	1	1	..	1	1	..	..
177052	Door front left trimmed assembly (used on 425)	..	..	..	1	..	..	..	..
177055	Door front left trimmed assembly (used on 428)	..	..	..	..	..	..	1	..
177057	Door front left trimmed assembly (used on 429)	..	..	..	..	..	..	..	1
177058	Door rear left trimmed assembly	1	..	..	..	..	..	..	..
177064	Door rear left trimmed assembly (used on 404)	..	..	1	..	..	..	..	..
177066	Door rear left trimmed assembly (use on 405-415)	..	..	..	1	..	..	..	..
177065	Door rear left trimmed assembly (used on 406)	..	..	..	..	1	..	..	..

Piece No.	Name	Number Required 403	413 423	404 414 424	405 415 425	406 416 426	407 417 427	408 418 428	409 419 429
177062	Door rear left trimmed assembly (used on 413-414)	..	1	1	..	..	..	..	..
177063	Door rear left trimmed assembly (used on 416)	..	..	..	..	1	..	..	..
177061	Door rear left trimmed assembly (used on 423-4-6)	..	1	1	..	1	..	..	..
177067	Door rear left trimmed assembly (used on 425)	..	..	..	1	..	..	..	..
177068	Door rear right trimmed assembly	1	..	..	..	..	..	..	..
177074	Door rear right trimmed assembly (used on 404)	..	..	1	..	..	..	..	..
177076	Door rear right trimmed assembly (used on 405-415)	..	..	..	1	..	..	..	..
177075	Door rear right trimmed assembly (used on 406)	..	..	..	..	1	..	..	..
177072	Door rear right trimmed assembly (used on 413-414)	..	1	1	..	..	..	..	..
177073	Door rear right trimmed assembly (used on 416)	..	..	..	..	1	..	..	..
177071	Door rear right trimmed assembly (used on 423-4-6)	..	1	1	..	1	..	..	..
177077	Door rear right trimmed assembly (used on 425)	..	..	..	1	..	..	..	..

DOOR PARTS

175426	Door bumper ($1\frac{11}{32}$")	x	x	x	x	x	x	x	x
175427	Door bumper ($1\frac{13}{32}$")	x	x	x	x	x	x	x	x
175428	Door bumper ($1\frac{9}{32}$")	x	x	x	x	x	x	x	x
164679	Door check strap	4	4	4	4	4	2	2	2
164359	Door check strap fastener plate	4	4	4	4	4	2	2	2
167250	Door check strap guide	2	2	2	2	2	..	..	..
164358	Door check strap stop plate	2	2	2	2	2	2	2	..
179680	Door check strap stop plate	..	..	..	..	..	..	..	2
169284	Door dove-tail—female	4	4	4	4	4	2	2	2
119298	Door dove-tail—male	4	4	4	4	4	2	2	2
169768	Door hinge—front—center—left	1	1	1	1	1	1	1	..
173539	Door hinge—front—center—left	..	..	..	..	..	..	..	1
169767	Door hinge—front—center—right	1	1	1	1	1	1	1	..
173538	Door hinge—front—center—right	..	..	..	..	..	..	..	1
169766	Door hinge—front—lower—left	1	1	1	1	1	1	1	1
169765	Door hinge—front—lower—right	1	1	1	1	1	1	1	1
173526	Door hinge—front—upper—left	..	..	..	..	..	..	..	1
169770	Door hinge—front—upper—left	1	1	1	1	1	1	1	..
173525	Door hinge—front—upper—right	..	..	..	..	..	..	..	1
169769	Door hinge—front—upper—right	1	1	1	1	1	1	1	..
142606	Door hinge blank—rear	x	x	x	x	x	..	..	..
170770	Door hinge—rear—upper—right	1	1	1	1	1	..	..	..
170771	Door hinge—rear—upper—left	1	1	1	1	1	..	..	..
5697	Screw ($\frac{1}{4}$—28 x $\frac{3}{8}$" oval. hd. mach.)	22	22	22	22	22	22	22	22
5699	Screw ($\frac{1}{4}$—28 x $\frac{13}{32}$" flat hd. mach.)	16	16	16	16	16	16	16	16
174146	Door hinge pillar finishing plate—right	..	..	..	..	..	..	..	1
174147	Door hinge pillar finishing plate—left	..	..	..	..	..	..	..	1
140237	Door hinge pin ($\frac{9}{32}$" dia.)	8	8	8	8	8	4	4	4
169771	Door hinge pin ($\frac{5}{16}$" dia.)	4	4	4	4	4	2	2	2
172220	Door hinge pin bushing—oilless (use with $\frac{9}{32}$" dia. pin)	x	x	x	x	x	x	x	x
173965	Door hinge pin bushing—oilless (use with $\frac{5}{16}$" dia. pin)	x	x	x	x	x	x	x	x
169772	Door hinge pin nut	4	4	4	4	4	2	2	2
5500	Door hinge pin lock washer	4	4	4	4	4	2	2	2
163893	Door key lock	1	1	1	2	1	1	1	1
137638	Door key lock retaining bushing	1	1	1	2	1	1	1	1
148589	Door key lock retaining bushing screw	1	1	1	2	1	1	1	1
159100	Door lock—front—right	1	1	1	1	1	1	1	1
159101	Door lock—front—left	1	1	1	1	1	1	1	1
169763	Door lock—rear—right	1	1	1	..	1	..	..	..
169655	Door lock—rear—right	..	..	..	1	..	..	..	..
169656	Door lock—rear—left	1	1	1	1	1	..	..	..
183750	Door lock adjusting screw	x	x	x	x	x	x	x	x
173636	Door lock handle (used on 403-404-405-406-407-408-409)	4	..	4	4	4	2	2	2
170667	Door lock handle (used on 413-423-414-424-415-525-416-426-417-427-418-428-419-429)	..	4	4	4	4	2	2	2

packardinfo.com

Piece No.	Name	Number Required 403	413 423	404 414 424	405 415 425	406 416 426	407 417 427	408 418 428	409 419 429
159147	Door lock lever assembly—left	1	1	1	1	1	1	1	1
159146	Door lock lever assembly—right	1	1	1	1	1	1	1	1
169665	Door lock lever connecting link	2	2	2	2	2	2	2	
174127	Door lock lever connecting link								2
147986	Door lock lever ferrule (used on 403-404-405-406-407-408)	4		4	4	4	2	2	
172203	Door lock lever ferrule (used on 413-423-414-424-415-425-416-426-417-427-418-428-409-419-429)		4	4	4	4	2	2	2
162320	Door lock lever guide	2	2	2	2	2			
170994	Door lock lever handle (used on 413-423-414-424-415-425-416-426-417-427-418-428) (ivory)		4	4	4	4	2	2	
178491	Door lock lever handle (used on 413-423-414-424-415-425-416-426-417-427-418-428) (green tint)		4	4	4	4	2	2	
148707	Door lock lever handle (used on 403-404-405-406-407-408-409-419-429)	4		4	4	4	2	2	2
147039	Door lock lever handle escutcheon plate	4	4	4	4	4	2	2	2
179507	Door lock striker (fastened with two machine screws)	4	4	4	4	4			
170372	Door lock striker (fastened with one machine screw and one wood screw)	4	4	4	4	4			
170689	Door lock striker						2	2	2
170336	Door lock striker nut (used with striker 179507)	4	4	4	4	4			
170335	Door lock striker screw (used with striker 179507)	4	4	4	4	4			
171026	Door pull to handle (used on 423-424-425-426) (ivory inlay)		2	2	2	2			
178496	Door pull to handle (used on 423-424-425-426) (green tint inlay)		2	2	2	2			
171005	Door scuff plate—front left (used on 403-404-405-406-407-408-409-413-414-415-416-417-418-419)	1	1	1	1	1	1	1	1
175268	Door scuff plate—front—left (used on 423-424-425-426-427-428-429)		1	1	1	1	1	1	1
171004	Door scuff plate—front—right (used on 403-404-405-406-407-408-409-413-414-415-416-417-418-419)	1	1	1	1	1	1	1	1
175269	Door scuff plate—front—right (used on 423-424-425-426-427-428-429)		1	1	1	1	1	1	1
169952	Door scuff plate—rear—left	1							
171007	Door scuff plate—rear—left (used on 404-405-406-413-414-415-416)		1	1	1	1			
175270	Door scuff plate—rear—left (used on 423-424-425-426)		1	1	1	1			
171006	Door scuff plate—rear—right (used on 404-405-406-413-414-415-416)		1	1	1	1			
175271	Door scuff plate—rear—right (used on 423-424-425-426)		1	1	1	1			
169951	Door scuff plate—rear—right	1							

FASTENERS

161793	Fastener eyelet—short prong—curtain carrier strap								x
161792	Fastener eyelet plate—short prong—curtain carrier strap								x
177609	Fastener plate—prong—curtain carrier strap								x
177608	Fastener—single prong—curtain carrier strap								x
143578	Snap fastener machine screw post top side lower								x
175757	Snap fastener rivet post—arm rest flap (used on 403-404-405-407-413-417-423)	x	x	x	x		x		
175757	Snap fastener rivet post—door pocket (used on 403-404-405-406)	x		x	x	x			
123094	Snap fastener rivet post—male—long—door pocket (used on 403-404-405-406)	x		x	x	x			
111074	Snap fastener rivet post—female—door pocket (used on 403-404-405-406)	x		x	x	x			
139158	Snap fastener rivet post—male—top side rail								x
139158	Snap fastener rivet post—male—top side lower								x
139157	Snap fastener rivet post—female—top side rail								x
112058	Snap fastener screw post—arm rest (used on 403-404-405-407-417-427)	x		x	x		x		
112058	Snap fastener screw post—carpet	x	x	x	x	x	x	x	x
112058	Snap fastener screw post—top envelope								x
169692	Snap fastener screw post washer—rear floor carpet (used on 414-415-416-417-424-425-426-427)			x	x	x	x		
115799	Snap fastener socket—carpet	x	x	x	x	x	x	x	x
137510	Snap fastener socket—female—door pocket (used on 403-404-405-406)	x		x	x	x			
137510	Snap fastener socket—female—arm rest (used on 403-404-405-407-417-427)	x		x	x		x		

Piece No.	Name	Number Required 403	413 423	404 414 424	405 415 425	406 416 426	407 417 427	408 418 428	409 419 429
139150	Snap fastener socket—female top envelope	..	..	..	..	..	..	..	x
139150	Snap fastener socket—female top side rail	..	..	..	..	..	..	..	x
139150	Snap fastener socket—female— top side lower	..	..	..	..	..	..	..	x
115798	Snap fastener socket ring—long prong—carpet	x	x	x	x	x	x	x	x
169283	Snap fastener socket ring—long prong—carpet (used on 413-414-415-416-417)	..	x	x	x	x	x	..	..
139159	Snap fastener top—top envelope	..	..	..	..	..	..	..	x

FLOOR BOARD

169956	Floor board—front assembly (not used with folding seat on 407-417-427)	1	1	1	1	1	1	1	1
179528	Floor board—front assembly (used with folding seat)	..	..	..	..	..	1	..	..
175685	Floor board—rear assembly	..	1	..	..	..	..	..	..
169932	Floor board—rear assembly	1	..	1	1	..	..	..	..

FOLDING SEAT

171643	Folding seat trimmed assembly (used on 404-405) (with support 9" long from center to center)	..	..	2	2	..	..	..	..
171673	Folding seat trimmed assembly (used on 414-415) (with support 9" long from center to center)	..	..	2	2	..	..	..	..
173610	Folding seat trimmed assembly (used on 424-425) (with support 9" long from center to center)	..	..	2	2	..	..	..	..
179594	Folding seat trimmed assembly (used on 404-405) (with support $7\frac{15}{16}$" long from center to center)	..	..	2	2	..	..	..	..
179597	Folding seat trimmed assembly (used on 414-415) (with support $7\frac{15}{16}$" long from center to center)	..	..	2	2	..	..	..	..
179598	Folding seat trimmed assembly (used on 424-425) (with support $7\frac{15}{16}$" long from center to center)	..	..	2	2	..	..	..	..
179508	Folding seat untrimmed assembly (used on 404-405) (with support $7\frac{15}{16}$" long from center to center)	..	..	2	2	..	..	..	..
179509	Folding seat untrimmed assembly (used on 414-415-424-425) (with support $7\frac{15}{16}$" long from center to center)	..	..	2	2	..	..	..	..
178477	Folding seat untrimmed assembly (used on 404-405) (with support 9" long from center to center)	..	..	2	2	..	..	..	..
178478	Folding seat untrimmed assembly (used on 414-415-424-425) (with support 9" long from center to center)	..	..	2	2	..	..	..	..
178507	Folding seat back untrimmed assembly (used on 404-405)	..	..	2	2	..	..	..	..
178508	Folding seat back untrimmed assembly (used on 414-415-424-425)	..	..	2	2	..	..	..	..
167945	Folding seat back to seat frame screw	..	..	4	4	..	..	..	..
169957	Folding seat floor plate	..	..	1	1	..	..	..	..
171692	Folding seat frame assembly (used on 414-415-424-425)	..	..	2	2	..	..	..	..
169788	Folding seat frame assembly (used on 404-405)	..	..	2	2	..	..	..	..
5580	Screw (No. 10—32 x 1" F. H. mach.)	..	..	16	16	..	..	..	..
5529	Screw ($\frac{1}{4}$ - 28 x $1\frac{3}{8}$" F. H. mach.)	..	..	8	8	..	..	..	..
8220	Screw ($\frac{1}{4}$ - 28 x $1\frac{1}{2}$" F. H. mach.)	..	..	8	8	..	..	..	..
7003	Nut (No. 10—32)	..	..	16	16	..	..	..	..
7004	Nut ($\frac{1}{4}$" - 28)	..	..	16	16	..	..	..	..
3867	Washer ($\frac{3}{16}$" plain)	..	..	4	4	..	..	..	..
169779	Folding seat frame side—left (used on 404-405)	..	..	2	2	..	..	..	..
171698	Folding seat frame side—left (used on 414-415-424-425)	..	..	2	2	..	..	..	..
169778	Folding seat frame side—right (used on 404-405)	..	..	2	2	..	..	..	..
171703	Folding seat frame side—right (used on 414-415-424-425)	..	..	2	2	..	..	..	..
167244	Folding seat handle assembly	..	..	2	2	..	..	..	..
100100	Folding seat pivot pin	..	..	4	4	..	..	..	..
170341	Folding seat pivot pin retainer (use with support 9" long from center to center)	..	..	2	2	..	..	..	..

packardinfo.com

Piece No.	Name	Number Required 403	413 423	404 414 424	405 415 425	406 416 426	407 417 427	408 418 428	409 419 429
179620	Folding seat pivot pin retainer (use with support 7 15/16" long from center to center)			2	2				
5782	Screw (1/4 - 28 x 3 1/4" flat hd.)			4	4				
5502	Lock washer (1/4")			4	4				
7004	Nut (1/4"—28)			4	4				
62065	Washer (17/64 x 3/4" plain)			4	4				
178475	Folding seat support—left (used on 404-405) (9" long from center to center)			2	2				
178480	Folding seat support—left (used on 414-415-424-425) (9" long from center to center)			2	2				
179514	Folding seat support—left (used on 404-405) (7 15/16" long from center to center)			2	2				
179525	Folding seat support—left (used on 414-415-424-425) (7 15/16" long from center to center)			2	2				
179515	Folding seat support—right (used on 404-405) (7 15/16" long from center to center)			2	2				
179524	Folding seat support—right (used on 414-415-424-425) (7 15/16" long from center to center)			2	2				
178476	Folding seat support—right (used on 404-405) (9" long from center to center)			2	2				
178479	Folding seat support—right (used on 414-424-415-425) (9" long from center to center)			2	2				
130869	Folding seat support to seat frame screw			4	4				
7006	Nut (3/8"—24 plain)			4	4				
5506	Lock washer (3/8")			4	4				

FOLDING SEAT

(407-417-427)

179281	Folding seat changeover equipment (used on 407)	1
179282	Folding seat changeover equipment (used on 417)	1
179283	Folding seat changeover equipment (used on 427)	1
179623	Folding seat (trimmed) assembly (used on 407)	1
179624	Folding seat (trimmed) assembly (used on 417)	1
179625	Folding seat (trimmed) assembly (used on 427)	1
179629	Folding seat (untrimmed) assembly	1
146168	Folding seat back (untrimmed) assembly	1
146163	Folding seat back frame side—right	1
146164	Folding seat back frame side—left	1
130855	Folding seat back to seat frame screw	2
7210	Nut (5/16" - 24 blind)	2
5504	Lockwasher (5/16")	2
146173	Folding seat frame assembly	1
8203	Screw (No. 10 - 32 x 1 3/16" F. H. mach.)	8
8224	Screw (No. 10—32 x 5/8" F. H. mach.)	4
5229	Screw (1/4 - 28 x 1 3/4" flat hd. mach.)	4
8220	Screw (1/4 - 28 x 1 1/2" flat hd. mach.)	4
7004	Nut (1/4 - 28 plain)	8
7003	Nut (No. 10 - 32 plain)	12
146156	Folding seat frame side—right	1
146159	Folding seat frame side—left	1
179521	Folding seat pivot screw	2
5793	Lockwasher	2
179583	Folding seat support	2
179520	Folding seat support bracket—right	1
179519	Folding seat support bracket—left	1
5795	Screw (1/4—28 x 2 1/4" oval hd. mach.)	4
5727	Screw (1/4—28 x 1 3/4" oval head machine)	4
62065	Washer (1/4" plain special)	8

packardinfo.com

Piece No.	Name	Number Required 403	413 423	404 414 424	405 415 425	406 416 426	407 417 427	408 418 428	409 419 429
5502	Lockwasher (¼″ std.)						8		
7004	Nut (¼″—28)						8		
130869	Folding seat support to seat frame screw						2		
5506	Lockwasher (⅜″)						2		
7006	Nut ⅜″—24 plain						2		
145607	Folding seat support rear assembly						1		
145606	Folding seat support—rear						1		
8001	Screw (¼—28 x 1 3/16″ oval hd. mach.)						1		
142821	Folding seat support rear bracket						1		
142818	Folding seat support rear spring						1		

FOOT REST

145404	Foot rest assembly (used on 403-404-405)	1		1	1				
173851	Foot rest assembly (used on 423-424-425)		1	1	1				
147949	Foot rest assembly (used on 413-414-415)		1	1	1				
79574	Foot rest assembly							1	1
122146	Foot rest pivot stud							2	2
145407	Foot rest pivot stud (used on 403-404-405)	2		2	2				
147963	Foot rest pivot stud		2						
156598	Foot rest pivot stud (used on 414-415-424-425)			2	2				
180134	Nut (⅜″—24 blind)		2					2	2
174151	Foot rest pivot stud spacer (used on 414-415-424-425)			2	2				

FRONT SEAT

142793	Front seat back compartment lid hinge							1	1
114525	Front seat back compartment lid lifter							1	
148321	Front seat back compartment lid lock								1
164259	Front seat back compartment lid lock escutcheon plate								1
157080	Front seat back compartment lid lock striker								1
170670	Front seat (left) frame carrier bracket—lower	1	1	1		1		1	1
171009	Front seat (left) frame carrier bracket—upper	1	1	1		1		1	1
175131	Front seat (left) lever assembly	1	1	1		1		1	1
29874	Front seat (left) lever spring	2	2	2		2		2	2
3877	Washer (⅜″ plain)	2	2	2		2		2	2
4290	Pin (3/32 x ⅝″)	2	2	2		2		2	2
175129	Front seat (left) operating knob and shaft assembly	1	1	1		1		1	1
175272	Front seat (left) operating screw assembly	1	1	1		1		1	1
4648	Pin (3/16 x 1 1/16″ straight)	1	1	1		1		1	1
175132	Front seat (left) operating screw nut	1	1	1		1		1	1
175126	Front seat (left) operating screw thrust washer	1	1	1		1		1	1
4319	Pin (5/32 x ⅝″ spring cotter)	1	1	1		1		1	1
175128	Front seat (left) operating shaft	1	1	1		1		1	1
5033	Ball (¼″)	1	1	1		1		1	1
116955	Ball spring	1	1	1		1		1	1
5735	Front seat (left) operating shaft stop screw	1	1	1		1		1	1
173016	Front seat (left) retaining bracket	1	1	1		1		1	1
175133	Front seat (left) thrust bracket—female	1	1	1		1		1	1
175134	Front seat (left) thrust bracket—male	1	1	1		1		1	1
8201	Screw (¼—28 x ⅝″ flat head mach.)	4	4	4		4		4	4
5502	Lock washer (¼″)	4	4	4		4		4	4
7004	Nut (¼″—28 plain)	4	4	4		4		4	4
173150	Front seat locking lever						2		
173513	Front seat locking lever pin						2		
173148	Front seat locking lever bracket						2		
173313	Front seat locking lever spring						2		

packardinfo.com

GOLF COMPARTMENT

Piece No.	Name	Number Required: 403	413 423	404 414 424	405 415 425	406 416 426	407 417 427	408 418 428	409 419 429
173639	Golf compartment door trimmed assembly	..	..	..	..	..	..	1	1
111671	Golf compartment door bumper	..	..	..	..	..	..	2	2
111672	Golf compartment door bumper socket	..	..	..	..	..	..	2	2
163766	Golf compartment door hinge	..	..	..	..	..	..	2	2
163767	Golf compartment door lock	..	..	..	..	..	..	1	1
143615	Golf compartment door lock striker	..	..	..	..	..	..	1	1

GRIP HANDLE

170996	Grip handle (used on 413-423-414-424-415-425-416-426-417-427) (ivory inlay)	2	2	2	2	2	2	..	..
178497	Grip handle (used on 413-423-414-424-415-425-416-426-417-427) (green tint inlay)	2	2	2	2	2	2	..	..

HASSOCK

135807	Hassock (used on 406-416)	..	..	..	..	2	..	..	..
174216	Hassock (used on 426)	..	..	..	..	2	..	..	..

INSTRUMENT BOARD

172019	Instrument board assembly	1	1	1	1	1	1	1	1
178484	Instrument board compartment door assembly—right	1	1	1	1	1	1	1	1
178483	Instrument board compartment door assembly—left	1	1	1	1	1	1	1	1
5584	Screw (No. 6—40 x 3/8" flat head)	6	6	6	6	6	6	6	6
174723	Instrument board compartment door bumper	2	2	2	2	2	2	2	2
173805	Instrument board compartment door hinge—right	1	1	1	1	1	1	1	1
173806	Instrument board compartment door hinge—left	1	1	1	1	1	1	1	1
173347	Instrument board compartment door knob (ivory)	2	2	2	2	2	2	2	2
178440	Instrument board compartment door knob (green tint)	2	2	2	2	2	2	2	2
8027	Screw (No. 10—32 x 1 1/32" oval hd. mach.)	2	2	2	2	2	2	2	2
7717	Screw (No. 10—32 x 1/2" fill. hd. mach.)	2	2	2	2	2	2	2	2
5500	Lockwasher No. 10	2	2	2	2	2	2	2	2
105029	Instrument board compartment door spring dowel	2	2	2	2	2	2	2	2
172129	Instrument board compartment door spring dowel plate	2	2	2	2	2	2	2	2
5709	Screw (No. 4—40 x 1/2" flat hd. mach.)	4	4	4	4	4	4	4	4
5459	Lock washer (No. 4)	4	4	4	4	4	4	4	4
7000	Nut (No. 4 plain)	4	4	4	4	4	4	4	4
175384	Instrument board steering post bracket support	1	1	1	1	1	1	1	1
5701	Screw (1/4—28 x 9/16" flat hd.)	2	2	2	2	2	2	2	2
5574	Screw (1/4—28 x 7/8" flat hd.)	2	2	2	2	2	2	2	2
3868	Washer (1/4" plain)	2	2	2	2	2	2	2	2
5502	Lock washer (1/4")	4	4	4	4	4	4	4	4
7004	Nut (1/4"—28 plain)	4	4	4	4	4	4	4	4

MATS

171629	Floor mat—rear (used on 416-426)	..	..	..	..	1	..	..	..
171549	Floor mat—rear (used on 414-424-415-425)	..	..	1	1	..	..	..	..
175970	Floor mat—rear	..	1	..	..	..	..	..	..
170980	Floor mat—rear (used on 417-427)	..	..	..	..	1	..	..	..

MOULDINGS

Piece No.	Name	Number Required 403	413 423	404 414 424	405 415 425	406 416 426	407 417 427	408 418 428	409 419 429
174225	Moulding cowl rail finishing	..	..	..	..	..	..	..	1
169680	Moulding cowl rail finishing (used on 403-404-405-406-407-408)	1	..	1	1	1	1	1	..
172252	Moulding cowl rail finishing (used on 423-424-425-426-427-428)	..	1	1	1	1	1	1	..
173634	Moulding door window finishing—right (used on 408)	..	..	..	..	..	..	1	..
174138	Moulding door window finishing—right	..	..	..	..	..	..	..	1
169704	Moulding door window finishing—front right (used on 403-404-405-406-407)	1	..	1	1	1	1	..	..
174139	Moulding door window finishing—left	..	..	..	..	..	..	..	1
173635	Moulding door window finishing—left (used on 408)	..	..	..	..	..	..	1	..
169705	Moulding door window finishing—front left (used on 403-404-405-406-407)	1	..	1	1	1	1	..	..
173971	Moulding door window finishing—front upper—right (used on 423-424-425-526-427-428)	..	1	1	1	1	1	1	..
173970	Moulding door window finishing—front upper—left (used on 423-424-425-426-427-428)	..	1	1	1	1	1	1	..
173973	Moulding door window finishing—front—lower right (used on 423-424-425-426-427-428)	..	1	1	1	1	1	1	1
173482	Moulding door window finishing—front—lower right (used on 413-414-415-416-417-418)	..	1	1	1	1	1	1	1
173972	Moulding door window finishing—front—lower left (used on 423-424-425-426-427-428)	..	1	1	1	1	1	1	1
173483	Moulding door window finishing—front—lower left (used on 413-414-415-416-417-418)	..	1	1	1	1	1	1	1
169716	Moulding door window finishing—rear right (used on 403-404-405-406)	1	..	1	1	1	..	..	..
169717	Moulding door window finishing—rear left (used on 403-404-405-406)	1	..	1	1	1	..	..	..
173976	Moulding door window finishing—rear upper (used on 423-424-425-426)	..	2	2	2	2	..	..	..
173979	Moulding door window finishing—rear—lower right (used on 423-424-425-426)	..	1	1	1	1	..	..	..
173478	Moulding door window finishing—rear—lower right (used on 413-414-415-416)	..	1	1	1	1	..	..	..
173978	Moulding door window finishing—rear—lower left (used on 423-424-425-426)	..	1	1	1	1	..	..	..
173479	Moulding door window finishing—rear—lower left (used on 413-414-415-416)	..	1	1	1	1	..	..	..
169706	Moulding door window finishing—front side—front right (used on 413-414-415-416-417-418)	..	1	1	1	1	1	1	..
173967	Moulding door window finishing—front side—front right (used on 423-424-425-426-427-428)	..	1	1	1	1	1	1	..
169707	Moulding door window finishing—front side—front left (used on 413-414-415-416-417-418)	..	1	1	1	1	1	1	..
173966	Moulding door window finishing—front side—front left (used on 423-424-425-426-427-428)	..	1	1	1	1	1	1	..
173968	Moulding door window finishing—side (used on 423-424-425-426-427-428)	..	3	3	3	3	1	1	..
173969	Moulding door window finishing—side (used on 423-424-425-426-427-428)	..	3	3	3	3	1	1	..
157064	Moulding door window finishing—side (used on 413-414-415-416-417-418)	..	3	3	3	3	1	1	..
157063	Moulding door window finishing—side (used on 413-414-415-416-417-418)	..	3	3	3	3	1	1	..
176276	Moulding door window finishing—front—upper left (used on 413-414-415-416-417-418)	..	1	1	1	1	1	1	..
169712	Moulding door window finishing—front—upper right (used on 413-414-415-416-417-418)	..	1	1	1	1	1	1	..
169718	Moulding door window finishing—rear upper (used on 413-414-415-416)	..	2	2	2	2	..	..	..
174145	Moulding door window guide	..	..	..	..	..	..	..	2
173958	Moulding door window sash guide	..	..	..	..	..	..	..	2

packardinfo.com

Piece No.	Name	Number Required 403	413 423	404 414 424	405 415 425	406 416 426	407 417 427	408 418 428	409 419 429
171734	Moulding partition window finishing (used on 405)				1				
175085	Moulding partition window finishing—center left (used on 405)				1				
175084	Moulding partition window finishing—center right (used on 405)				1				
174215	Moulding partition window finishing—lower (used on 425)				1				
173472	Moulding partition window finishing—lower (used on 415)				1				
171737	Moulding partition window finishing—side—right (used on 415)				1				
174213	Moulding partition window finishing—side—right (used on 425)				1				
171738	Moulding partition window finishing—side—left (used on 415)				1				
174212	Moulding partition window finishing—side—left (used on 425)				1				
171735	Moulding partition window finishing—upper (used on 415)				1				
174214	Moulding partition window finishing—upper (used on 425)				1				
171020	Moulding rain gutter—left (116″ long)	1	1						
171022	Moulding rain gutter—left (123″ long)			1	1				
173035	Moulding rain gutter—left (66″ long)							1	
172254	Moulding rain gutter—left (97¼″ long)					1			
173032	Moulding rain gutter—left (92½″ long)						1		
171021	Moulding rain gutter—right (116″ long)	1	1						
173036	Moulding rain gutter—right (66″ long)							1	
171023	Moulding rain gutter—right (123″ long)			1	1				
173033	Moulding rain gutter—right (92½″ long)						1		
172255	Moulding rain gutter—right (97¼″ long)					1			
175994	Moulding rear platform (44″ long)		1						
166426	Moulding rear platform (44½″ long)					1			
175086	Moulding rear window finishing (used on 403-404-405-406-407)	1		1	1	1	1		
175087	Moulding rear window finishing (used on 408)							1	
140530	Moulding rear window finishing—lower (used on 413-414-415-416-417-418)		1	1	1	1	1	1	
173989	Moulding rear window finishing—lower (used on 423-424-425-426-427-428)		1	1	1	1	1	1	
173419	Moulding rear window finishing—upper (used on 418)							1	
175609	Moulding rear window finishing—upper (used on 428)							1	
145532	Moulding rear window finishing—upper (used on 413-414-415-416-417)		1	1	1	1	1		
173988	Moulding rear window finishing—upper (used on 423-424-425-426-427)		1	1	1	1	1		
169676	Moulding side window finishing—right	1							
169723	Moulding side window finishing—right (used on 404-405)			1	1				
172230	Moulding side window finishing—right (used on 407)						1		
169677	Moulding side window finishing—left	1							
169724	Moulding side window finishing—left (used on 404-405)			1	1				
172231	Moulding side window finishing—left (used on 407)						1		
169698	Moulding side window finishing—front right (used on 413-414-415)		1	1	1				
173983	Moulding side window finishing—front right (used on 423-424-425-427)		1	1	1		1		
172232	Moulding side window finishing—front right (used on 417)						1		
173982	Moulding side window finishing—front left (used on 423-424-425-427)		1	1	1		1		
169699	Moulding side window finishing—front left (used on 413-414-415)		1	1	1				
172233	Moulding side window finishing—front left (used on 417)						1		
174231	Moulding side window finishing—lower (used on 407)						2		
175424	Moulding side window finishing—lower (used on 427)						2		
173996	Moulding side window finishing—lower (used on 424-425)			2	2				
175598	Moulding side window finishing—lower (used on 423)		2						
175591	Moulding side window finishing—lower (used on 413)		2						
173474	Moulding side window finishing—lower right (used on 414-415)			1	1				
173475	Moulding side window finishing—lower left (used on 414-415)			1	1				
175439	Moulding side window finishing panel—right (used on 423)		1						
175423	Moulding side window finishing panel—right (used on 427)						1		
173995	Moulding side window finishing panel—right (used on 424-425)			1	1				
173994	Moulding side window finishing panel—left (used on 424-425)			1	1				
175764	Moulding side window finishing panel—left (used on 427)						1		
175438	Moulding side window finishing panel—left (used on 423)		1						
175597	Moulding side window finishing—rear right (used on 423)		1						
175589	Moulding side window finishing—rear right (used on 413)		1						

Piece No.	Name	Number Required 403	413 423	404 414 424	405 415 425	406 416 426	407 417 427	408 418 428	409 419 429
169725	Moulding side window finishing—rear right (used on 414-415)	..	..	1	1	..	..	..	..
172234	Moulding side window finishing—rear right (used on 417)	..	..	..	..	..	1	..	..
173985	Moulding side window finishing—rear right (used on 424-425)	..	..	1	1	..	..	..	..
175277	Moulding side window finishing—rear right (used on 427)	..	..	..	..	..	1	..	..
175596	Moulding side window finishing—rear left (used on 423)	..	1	..	..	..	..	..	..
175276	Moulding side window finishing—rear left (used on 427)	..	..	..	..	..	1	..	..
169726	Moulding side window finishing—rear left (used on 414-415)	..	..	1	1	..	..	..	..
175590	Moulding side window finishing—rear left (used on 413)	..	1	..	..	..	..	..	..
172235	Moulding side window finishing—rear left (used on 417)	..	..	..	..	..	1	..	..
173984	Moulding side window finishing—rear left (used on 424-425)	..	..	1	1	..	..	..	..

PANELS

169963	Panel—cowl assembly	1	1	1	1	1	1	1	1
170298	Panel—dash assembly	1	1	1	1	1	1	1	1
173456	Panel—door right assembly	..	..	..	..	..	..	1	..
173458	Panel—door right assembly	..	..	..	..	..	..	..	1
173457	Panel—door left assembly	..	..	..	..	..	..	1	..
173459	Panel—door left assembly	..	..	..	..	..	..	..	1
170299	Panel—door—front right assembly	1	1	1	1	1	1	..	..
170300	Panel—door—front left assembly	1	1	1	1	1	1	..	..
170317	Panel—door—rear right assembly	..	..	..	..	1	..	..	..
170318	Panel—door—rear right assembly	1	..	..	..	..	..	..	..
170301	Panel—door—rear right assembly	..	1	1	..	..	..	..	..
170319	Panel—door—rear right assembly	..	..	..	1	..	..	..	..
170302	Panel—door—rear left assembly	..	1	1	1	..	..	..	..
170320	Panel—door—rear left assembly	1	..	..	..	..	..	..	..
170321	Panel—door—rear left assembly	..	..	..	..	1	..	..	..

packardinfo.com

REAR COMPARTMENT

173312	Rear compartment door assembly	..	..	..	..	..	1	..	..
122213	Rear compartment door brace assembly	..	..	..	..	..	1	..	..
111687	Rear compartment door bumper	..	..	..	..	..	2	..	..
172133	Rear compartment door drain gutter assembly	..	..	..	..	..	1	..	..
158994	Rear compartment door hinge	..	..	..	..	..	2	..	..
102590	Rear compartment light bulb 7V. 3 CP G-6—single contact	..	..	..	..	..	1	..	..
107654	Rear compartment light disconnector plug socket	..	..	..	..	..	1	..	..
136593	Rear compartment light switch (2 point)	..	..	..	..	..	1	..	..
176282	Rear compartment door lock	..	..	..	..	..	1	..	..
176206	Rear compartment door lock handle (locking type) (used on 407)	..	..	..	..	..	1	..	..
176207	Rear compartment door lock handle (locking type) (used on 417-427)	..	..	..	..	..	1	..	..
8018	Screw (No. 8—32 x $\frac{1}{16}$" O. H.)	..	..	..	..	..	1	..	..
163385	Washer	..	..	..	..	..	1	..	..
5581	Lock washer (No. 8)	..	..	..	..	..	1	..	..
176307	Rear compartment door lock striker	..	..	..	..	..	1	..	..

REAR QUARTER LIGHT

170995	Rear quarter light (used on 423-424-425-426-427-428) (ivory inlay)	..	2	2	2	2	2	2	..
178499	Rear quarter light (used on 423-424-425-426-427-428) (green tint inlay)	..	2	2	2	2	2	2	..
106214	Rear quarter light bracket (used on 423-424-425-426-427-428)	..	2	2	2	2	2	2	..
102590	Rear quarter light bulb (7V. 3CP G-6 single contact) (used on 423-424-425-426-427-428)	..	2	2	2	2	2	2	..

Printed in U. S. A.

Piece No.	Name	Number Required 403	413 423	404 414 424	405 415 425	406 416 426	407 417 427	408 418 428	409 419 429
174722	Rear quarter light—glass and rim (used on 423-424-425-426-427-428) (ivory inlay)	..	2	2	2	2	2	2	..
178514	Rear quarter light—glass and rim (used on 423-424-425-426-427-428) (green tint inlay)	..	2	2	2	2	2	2	..
174719	Rear quarter light reflector (used on 423-424-425-426-427-428)	..	2	2	2	2	2	2	..
170997	Rear quarter light switch (used on 423-424-425-426-427-428)	..	1	1	1	1	1	1	..

REAR VIEW MIRROR

175223	Rear view mirror assembly (hinge type)	1	1	1	1	1	1	1	..
179526	Rear view mirror assembly (ball and socket type)	1	1	1	1	1	1	1	..
156542	Rear view mirror assembly (hinge type)	..	..	..	..	..	..	..	1
176816	Rear view mirror assembly (ball and socket type)	..	..	..	..	..	..	..	1
5631	Screw (No. 10—32 x ¼″ rnd. hd.)	..	..	..	..	..	..	..	2
148754	Rear view mirror glass (use with hinge type mirror)	..	..	..	..	..	..	..	1
143568	Rear view mirror glass (use with hinge type mirror)	1	1	1	1	1	1	1	..
191367	Rear view mirror glass (use with ball and socket type)	1	1	1	1	1	1	1	..
191368	Rear view mirror glass (use with ball and socket type)	..	..	..	..	..	..	..	1
143555	Rear view mirror hinge pin (use with hinge type mirror)	1	1	1	1	1	1	1	1
5500	Lock washer (No. 10) (use with hinge type mirror)	1	1	1	1	1	1	1	1
7203	Nut (No. 10 blind) (use with hinge type mirror)	2	2	2	2	2	2	2	2
179527	Rear view mirror bracket assembly	1	1	1	1	1	1	1	..

ROBE RAIL

173420	Robe rail assembly (used on 403-404-406)	1	..	1	..	1	..	..	..
173439	Robe rail assembly (used on 405)	..	..	..	1	..	..	..	..
174150	Robe rail assembly (used on 413-423-414-424-415-425-416-426) ivory inlay)	..	1	1	1	1	..	..	..
178501	Robe rail assembly (used on 413-423-414-424-415-425-416-426) (green tint inlay)	..	1	1	1	1	..	..	..

RUMBLE SEAT

157018	Rumble seat compartment door bumper	2	2
173129	Rumble seat compartment door hinge—right	1	1
173130	Rumble seat compartment door hinge—left	1	1
7604	Bolt (¼—28 x 1⅝″ carriage common)	6	6
7004	Nut (¼″—28 plain)	6	6
5502	Lock washer (¼″)	6	6
157583	Rumble seat compartment door operating spring	2	2
157584	Rumble seat compartment door operating spring bolt	2	2
7104	Nut (¼″—28 castle)	2	2
4280	Cotter pin (1/16 x ½″)	2	2
157585	Rumble seat compartment door operating spring washer	2	2
127501	Rumble seat compartment door hinge bushing	2	2
127498	Rumble seat compartment door hinge screw	2	2
3884	Washer (½″)	2	2
5510	Lock washer (½″)	2	2
157625	Rumble seat compartment door lock striker	1	1
173138	Rumble seat compartment drain gutter assembly	1	1
102590	Rumble seat compartment light bulb (7-V—3-CP G-6 single contact)	1	1
107654	Rumble seat compartment light disconnector plug socket	1	1
136593	Rumble seat compartment light switch (2 point)	1	1
148338	Rumble seat door lock	1	1
148339	Rumble seat door lock operating lever	1	1
173411	Rumble seat door lock operating rod and yoke end assembly	1	1

packardinfo.com

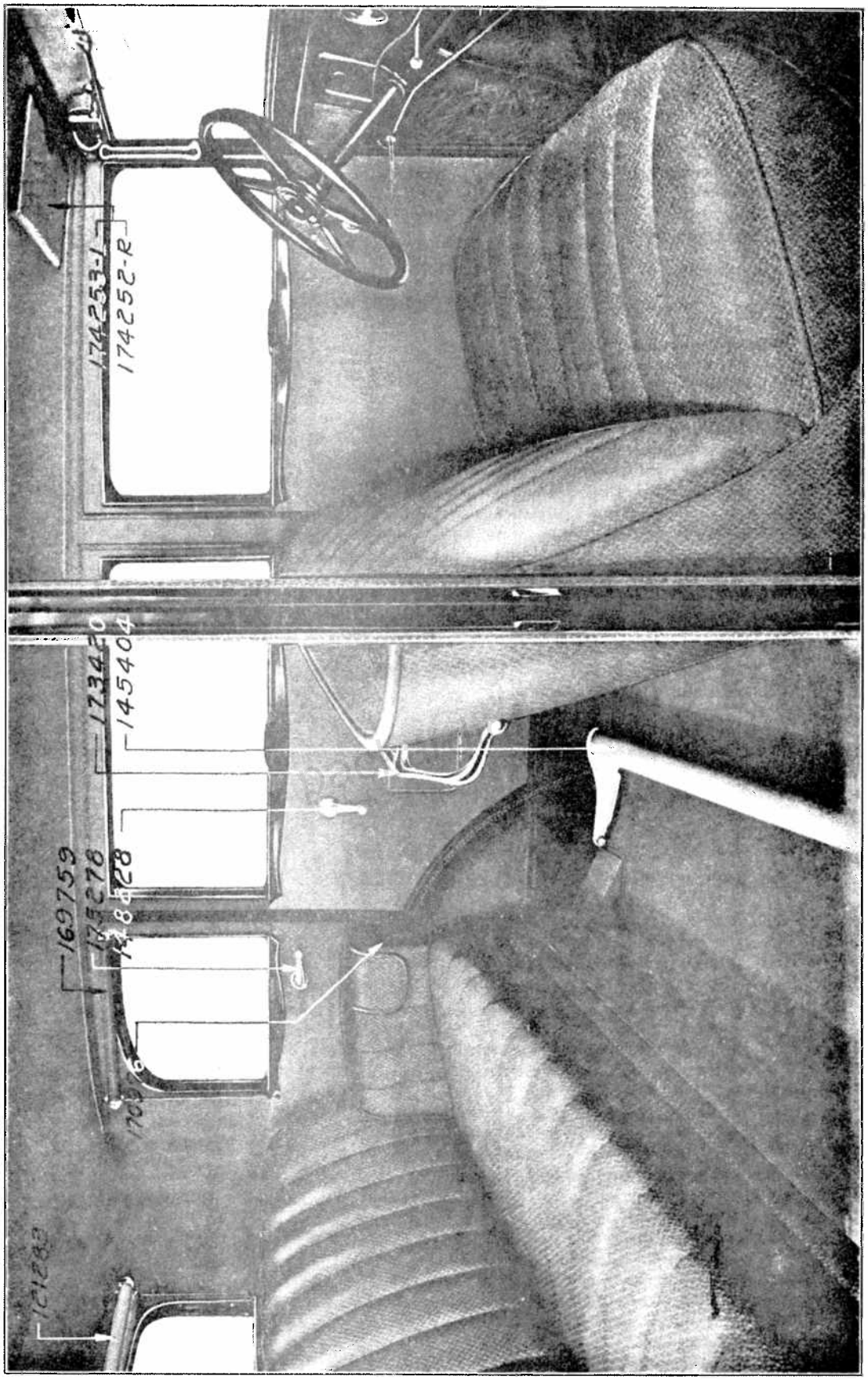

Printed in U. S. A.

Piece No.	Name	Number Required 403 413 423	404 414 424	405 415 425	406 416 426	407 417 427	408 418 428	409 419 429
176664	Rumble seat step—lower (used with rear wheel carrier) (used on 428-429) (specify finish)						1	1
176666	Rumble seat step—lower (used with side wheel carrier) (used on 428-429) (specify finish)						1	1
176674	Rumble seat step—lower (used with side wheel carrier) (used on 408-418-409-419)						1	1
175145	Rumble seat step—lower (used with rear wheel carrier) (used on 408-418-409-419)						1	1
175144	Rumble seat step—lower clamp plate (used with rear wheel carrier) (specify finish)						2	2
175144	Rumble seat step—lower clamp plate (used with side wheel carrier)						1	1
7859	Screw (¼—28 x 1½" hex. hd. mach.)						3	3
5434	Screw (¼—28 x 1⅝" hex. hd. mach.)						1	1
7842	Screw (¼—28 x 1¼" hex. hd. mach.)						2	2
5502	Lock washer (¼")						6	6
7004	Nut (¼"—28)						10	10
173644	Rumble seat step—upper (black enamel)						1	1
179602	Rumble seat step—upper (used on 428-9) (specify finish)						1	1
6116	Stud (⅜ x 16—⅜ x 24 x 1 17/32")						3	3
114055	Washer (⅜" plain)						3	3
5506	Lock washer (⅜")						3	3
7006	Nut (⅜"—24)						3	3
177858	Rumble seat step—upper bracket (black enamel)						1	1
179604	Rumble seat step—upper bracket (used on 428-429) (specify finish)						1	1
7861	Screw (5/16—24 x 1" hex. hd. mach.)						2	2
5504	Lock washer (5/16")						2	2
179123	Rumble seat step upper liner						1	1

packardinfo.com

SEAT CUSHIONS AND SPRINGS

145620	Seat back spring—folding seat					1		
170958	Seat back spring—front left	1	1	1	1		1	
179635	Seat back spring—front left							1
171715	Seat back spring—front left			1				
173238	Seat back spring—front					2		
170753	Seat back spring—front right	1	1	1	1		1	
179633	Seat back spring—front right							1
171829	Seat back spring—rear (used on 403-4-5-13-14-15)	1	1	1	1			
172248	Seat back spring—rear (used on 406-416)				1			
173298	Seat back spring—rear (used on 407-17)					1		
175993	Seat back spring—rear left (used on 427)					1		
175257	Seat back spring—rear left (used on 424-425-423)		1	1	1			
175259	Seat back spring—rear left (used on 426)				1			
176036	Seat back spring—rear right (used on 423)		1					
175258	Seat back spring—rear right (used on 424-425)			1	1			
175260	Seat back spring—rear right (used on 426)				1			
175992	Seat back spring—rear right (used on 427)					1		
173640	Seat back spring—rumble seat						1	1
171837	Seat cushion assembly—front (used on 415)			1				
173629	Seat cushion assembly—front (used on 425)			1				
171836	Seat cushion assembly—front (used on 405)			1				
179674	Seat cushion assembly—front left (used on 409)							1
179676	Seat cushion assembly—front left (used on 429)							1
179675	Seat cushion assembly—front left (used on 419)							1
171839	Seat cushion assembly—front left (used on 403-404-406-408) (pleated front facing)	1		1		1	1	
179759	Seat cushion assembly—front left (used on 403-404-406-408) (plain front facing)	1		1		1	1	
173428	Seat cushion assembly—front left (used on 407) (pleated front facing)					1		

Piece No.	Name	Number Required 403	413 423	404 414 424	405 415 425	406 416 426	407 417 427	408 418 428	409 419 429
179761	Seat cushion assembly—front left (used on 407) (plain front facing)	..	..	..	..	..	1	..	..
175774	Seat cushion assembly—front left (used on 427)	..	..	..	..	..	1	..	..
173429	Seat cushion assembly—front left (used on 417)	..	..	..	..	..	1	..	..
171840	Seat cushion assembly—front left (used on 413-414-416-418)	..	1	1	..	1	..	1	..
173519	Seat cushion assembly—front left (used on 423-424-426-428)	..	1	1	..	1	..	1	..
179677	Seat cushion assembly—front right (used on 409)	..	..	..	..	..	..	..	1
179678	Seat cushion assembly—front right (used on 419)	..	..	..	..	..	..	..	1
179679	Seat cushion assembly—front right (used on 429)	..	..	..	..	..	..	..	1
171842	Seat cushion assembly—front right (used on 403-404-406-408); (pleated front facing)	1	..	1	..	1	..	1	..
179760	Seat cushion assembly—front right (used on 403-404-406-403) (plain front facing)	1	..	1	..	1	..	1	..
173430	Seat cushion assembly—front right (used on 407) (pleated front facing)	..	..	..	..	..	1	..	..
179762	Seat cushion assembly—front right (used on 407) (plain front facing)	..	..	..	..	..	1	..	..
175776	Seat cushion assembly—front right (used on 427)	..	..	..	..	..	1	..	..
173431	Seat cushion assembly—front right (used on 417)	..	..	..	..	..	1	..	..
171843	Seat cushion assembly—front right (used on 413-414-416-418)	..	1	1	..	1	..	1	..
173520	Seat cushion assembly—front right (used on 423-424-426-428)	..	1	1	..	1	..	1	..
171748	Seat cushion assembly—rear (used on 403-404-405)	1	..	1	1	..	..	..	..
171749	Seat cushion assembly—rear (used on 414-415)	..	..	1	1	..	..	..	..
173518	Seat cushion assembly—rear (used on 424-425)	..	..	1	1	..	..	..	..
181884	Seat cushion assembly—rear (used on 406)	..	..	..	..	1	..	..	..
181886	Seat cushion assembly—rear (used on 426)	..	..	..	..	1	..	..	..
176047	Seat cushion assembly—rear (used on 423)	..	1	..	..	..	..	..	..
173299	Seat cushion assembly—rear (used on 407)	..	..	..	..	..	1	..	..
176048	Seat cushion assembly—rear (used on 413)	..	1	..	..	..	..	..	..
176049	Seat cushion assembly—rear (used on 427)	..	..	..	..	..	1	..	..
181885	Seat cushion assembly—rear (used on 416)	..	..	..	..	1	..	..	..
173300	Seat cushion assembly—rear (used on 417)	..	..	..	..	..	1	..	..
173641	Seat cushion assembly—rumble seat	..	..	..	..	..	..	1	1
179332	Seat cushion spring—front (special low type)	..	..	..	1	..	..	..	..
171859	Seat cushion spring—front	..	..	..	1	..	..	..	..
173237	Seat cushion spring—front right	..	..	..	..	..	1	..	..
179327	Seat cushion spring—front right (special low type)	..	..	..	..	..	1	..	..
178510	Seat cushion spring—front right	1	1	1	..	1	..	1	..
179632	Seat cushion spring—front right	..	..	..	..	..	..	..	1
179325	Seat cushion spring—front right (special low type)	1	1	1	..	1	..	1	1
179328	Seat cushion spring—front left (special low type)	..	..	..	..	..	1	..	..
173311	Seat cushion spring—front left	..	..	..	..	..	1	..	..
178509	Seat cushion spring—front left	1	1	1	..	1	..	1	..
179631	Seat cushion spring—front left	..	..	..	..	..	..	..	1
179324	Seat cushion spring—front left (special low type)	1	1	1	..	1	..	1	1
173307	Seat cushion spring—rear (used on 414-5—424-5)	..	..	1	1	..	..	..	..
179329	Seat cushion spring—rear (used on 414-5—424-5) (special low type)	..	..	1	1	..	..	..	..
176051	Seat cushion spring—rear	..	1	..	..	..	..	..	..
179326	Seat cushion spring—rear (special low type)	..	1	..	..	..	..	..	..
170340	Seat cushion spring—rear (used on 403-4-5)	1	..	1	1	..	..	..	..
179334	Seat cushion spring—rear (used on 403-4-5) (special low type)	1	..	1	1	..	..	..	..
173305	Seat cushion spring—rear (used on 407)	..	..	..	..	..	1	..	..
179330	Seat cushion spring—rear (used on 407) (special low type)	..	..	..	..	..	1	..	..
173306	Seat cushion spring—rear (used on 417-427)	..	..	..	..	..	1	..	..
179331	Seat cushion spring—rear (used on 417-427) (special low type)	..	..	..	..	..	1	..	..
181910	Seat cushion spring—rear	..	..	..	..	1	..	..	..
172294	Seat cushion spring—folding seat	..	..	1	1	..	..	..	..
173643	Seat cushion spring—rumble seat	..	..	..	..	..	..	1	1
145621	Seat cushion spring—folding seat	..	..	..	..	..	1	..	..

packardinfo.com

SMOKING CASE

Piece No.	Name	Number Required 403	413 423	404 414 424	405 415 425	406 416 426	407 417 427	408 418 428	409 419 429
175800	Ash receiver—complete (front pillar)	1	1	1	1	1	1	1	1
173440	Smoking case ash receiver (used on 406-416-424-425-426-427)	..	..	2	2	2	2	..	..
159408	Smoking case ash receiver—front (used on 414-415)	..	..	1	1	..	..	..	..
159407	Smoking case ash receiver—rear (used on 414-415)	..	..	1	1	..	..	..	..
137659	Smoking case cigar lighter (Casolite type) (used on 406-414-415-416-424-425-426-427)	..	..	1	1	1	1	..	..
145184	Smoking case cigar lighter tip (bayonet lock type) (used on 406-414-415-416-424-425-426-427)	..	..	1	1	1	1	..	..
105029	Smoking case compartment spring dowel	..	..	..	..	1	..	..	..
173977	Smoking case compartment spring dowel striker	..	..	..	..	1	..	..	..

TOGGLE GRIP

170956	Toggle grip	..	..	2	2	2	2	..	..

TOP

180196	Top assembly	..	..	..	..	..	..	..	1
173828	Top bow—rear	..	..	..	..	..	..	..	1
156861	Top bow strap assembly	..	..	..	..	..	..	..	2
174518	Top center bow assembly	..	..	..	..	..	..	..	1
156540	Top center bow hinge bumper	..	..	..	..	..	..	..	2
177661	Top envelope assembly	..	..	.	..	..	..	..	1
176637	Top rear curtain assembly	..	..	..	..	..	..	..	1
163798	Top rear curtain thumb screw	..	..	..	..	..	..	..	2
176281	Top rear curtain window	..	..	..	..	..	..	..	1
176777	Top to windshield clamp assembly	..	..	..	..	..	..	..	2
176773	Top to windshield clamp catch	..	..	..	..	..	..	..	2
156584	Top to windshield clamp hook and lever assembly	..	..	..	..	..	..	..	2

TRUNK PLATFORM

175651	Rear platform trunk bar center	..	..	..	..	1	..	..	..
175652	Rear platform trunk bar intermediate	..	..	..	..	2	..	..	..
175654	Rear platform trunk bar—outside right	..	..	..	..	1	..	..	..
175653	Rear platform trunk bar—outside left	..	..	..	..	1	..	..	..

VANITY CASE

(Also see Arm Rest Vanity Case)

173440	Vanity case ash receiver	..	..	..	..	2	..	..	..
157320	Vanity case clock (Waltham) (used on 414-424-415-425-427)	..	..	1	1	..	1	..	..
162370	Vanity case clock (Jaeger) (used on 414-424 415-425-427)	..	..	1	1	..	1	..	..
159423	Vanity case clock escutcheon (used on 414-415)	..	..	1	1	..	..	..	..
172103	Vanity case clock escutcheon (used on 424-425-427)	..	..	1	1	..	1	..	..
159405	Vanity case clock retaining clip (used on 414-415)	..	..	1	1	..	..	..	..
172107	Vanity case clock retaining clip assembly (Jaeger) (used on 424-425-427)	..	..	1	1	..	1	..	..
172108	Vanity case clock retaining clip assembly (Waltham) (used on 424-425-427)	..	..	1	1	..	1	..	..
173977	Vanity case compartment spring dowel striker	..	..	..	..	1	..	..	..
140939	Vanity case hand mirror (used on 414-415)	..	..	1	1	..	..	..	..

packardinfo.com

Piece No.	Name	Number Required 403	413 423	404 414 424	405 415 425	406 416 426	407 417 427	408 418 428	409 419 429
172205	Vanity case hand mirror (used on 406-416-424-425-426-427)	..	..	1	1	1	1	..	..
140941	Vanity case memorandum book (used on 414-415)	..	..	1	1	..	..	..	..
172204	Vanity case memorandum book (used on 406-416-424-425-426-427)	..	..	1	1	1	1	..	..
140942	Vanity case memorandum book pencil (used on 406-414-415-416-424-425-426-427)	..	..	1	1	1	1	..	..

VENTILATOR

170309	Ventilator cover and deflector assembly	1	1	1	1	1	1	1	1
137537	Ventilator cover hinge screw	2	2	2	2	2	2	2	2
3868	Washer (¼" plain)	2	2	2	2	2	2	2	2
7104	Nut (¼"—28 castle)	2	2	2	2	2	2	2	2
4280	Pin (1/16 x ½" cotter)	2	2	2	2	2	2	2	2
167265	Ventilator cover operating lever	1	1	1	1	1	1	1	1
7800	Screw (¼—28 x 1" hex. hd. mach.)	2	2	2	2	2	2	2	2
5502	Lock washer (¼")	2	2	2	2	2	2	2	2
7004	Nut (¼"—28 plain)	2	2	2	2	2	2	2	2
118555	Ventilator cover operating lever pin	1	1	1	1	1	1	1	1
118771	Ventilator cover operating pin roller	1	1	1	1	1	1	1	1
4280	Pin (1/16 x ½" cotter)	1	1	1	1	1	1	1	1
132671	Ventilator cover operating lever ratchet	1	1	1	1	1	1	1	1
5792	Ventilator cover operating lever ratchet yoke end pin	1	1	1	1	1	1	1	1
4290	Pin (3/32 x ⅝" cotter)	1	1	1	1	1	1	1	1
138261	Ventilator cover spring	1	1	1	1	1	1	1	1
145383	Ventilator hinge adjusting plate assembly—left	1	1	1	1	1	1	1	1
145384	Ventilator hinge adjusting plate assembly—right	1	1	1	1	1	1	1	1
175247	Ventilator weatherstrip	1	1	1	1	1	1	1	1

packardinfo.com

VISOR

179081	Sun visor panel trimmed assembly—right	1	1	1	1	1	1	1	..
179082	Sun visor panel trimmed assembly—left	1	1	1	1	1	1	1	..
179077	Sun visor hinge	2	2	2	2	2	2	2	..

WINDOW

178949	Window anti-rattler bumper	2	2	2	2	2	2	2	..
160126	Window curtain—rear assembly (used on 403-404-405-406-407-408)	1	..	1	1	1	1	1	..
173535	Window curtain—rear assembly (used on 423-424-425-426-427-428)	..	1	1	1	1	1	1	..
160324	Window curtain—rear assembly (used on 413-414-415-416-417-418)	..	1	1	1	1	1	1	..
121283	Window curtain roller—rear (used on 403-404-405-406-407-408-413-414-415-416-417-418)	1	1	1	1	1	1	1	..
172285	Window curtain roller—rear (used on 423-424-425-426-427-428)	..	1	1	1	1	1	1	..
169759	Window curtain roller—side (used on 403-413)	2	2	..	..	..	..	..	..
175976	Window curtain roller—side (used on 423)	..	2	..	..	..	..	..	..
176082	Window curtain roller—side (used on 427)	..	..	..	..	..	2	..	..
172286	Window curtain roller—side (used on 407-417-424-425)	..	..	2	2	..	2	..	..
169654	Window curtain roller—side (used on 404-414-405-415)	..	..	2	2	..	..	..	..
29790	Window curtain guide cord	x	x	x	x	x	x	x	..
110310	Window curtain screw eye	6	9	6	6	2	6	2	..
38059	Window curtain stick	3	3	3	3	1	3	1	..
173514	Window curtain tassel (used on 413-414-415-416-417-418-423-424-425-426-427-428)	..	3	3	3	1	3	1	..
170966	Window curtain tassel (used on 403-404-405-406-407-408)	3	..	3	3	1	3	1	..
173999	Window frame door glass channel assembly—right	..	..	..	..	..	..	..	1
173998	Window frame door glass channel assembly—left	..	..	..	..	..	..	..	1
5471	Screw (¼—28 x ¾" hex. hd.)	..	..	..	..	..	..	..	12

Piece No.	Name	Number Required 403	413 423	404 414 424	405 415 425	406 416 426	407 417 427	408 418 428	409 419 429
5502	Lock washer (1/4")	..	..	..	..	..	..	..	12
7004	Nut (1/4"—28 plain)	..	..	..	..	..	..	..	12
174130	Window frame door glass channel front assembly—right	..	..	..	..	..	..	..	1
174131	Window frame door glass channel front assembly—left	..	..	..	..	..	..	..	1
143554	Window glass cushion	x	x	x	x	x	x	x	..
176308	Window glass cushion	..	..	..	..	..	..	..	x
179606	Window glass cushion—rear	1	1	1	1	1	1	..	..
162217	Window glass partition bumper	..	..	..	2	..	..	..	..
51331	Window glass packing	x	x	x	x	x	x	x	x
174142	Window lifter assembly door—right	..	..	..	..	..	..	..	1
174141	Window lifter assembly door—left	..	..	..	..	..	..	..	1
176787	Window lifter bumper	x	x	x	x	x	x	x	x
169746	Window lifter—door front—right assembly	1	1	1	1	1	1	1	..
169747	Window lifter—door front—left assembly	1	1	1	1	1	1	1	..
170296	Window lifter—door rear—right assembly	1	1	1	1	1	..	..	..
170297	Window lifter—door rear—left assembly	1	1	1	1	1	..	..	..
179619	Window lifter—partition asembly	..	..	..	1	..	..	..	..
173415	Window lifter—rear assemsbly	..	..	..	..	..	..	1	..
169503	Window lifter regulator roller guide—left	..	..	..	..	..	..	..	1
169524	Window lifter regulator roller guide—right	..	..	..	..	..	..	..	1
169734	Window lifter—side—right assembly	1	1	..	..	..	..	..	..
169661	Window lifter—side—right assembly	..	..	1	1	..	..	..	..
172147	Window lifter—side—right assembly	..	..	..	..	..	1	..	..
169735	Window lifter—side—left assembly	1	1	..	..	..	..	..	..
169662	Window lifter—side—left assembly	..	..	1	1	..	..	..	..
172146	Window lifter—side—left assembly	..	..	..	..	..	1	..	..
170657	Window regulator—door front—right	1	1	1	1	1	1	1	..
169359	Window regulator—door front—right	..	..	..	..	..	..	..	1
170658	Window regulator—door front—left	1	1	1	1	1	1	1	..
169360	Window regulator—door front—left	..	..	..	..	..	..	..	1
169365	Window regulator—door rear—right	1	1	1	1	1	..	..	..
169366	Window regulator—door rear—left	1	1	1	1	1	..	..	..
148228	Window regulator handle—long (used on 403-404-405-406-407-408)	4	..	4	5	4	2	3	..
175278	Window regulator handle—short (used on 403-404-405-407)	2	..	2	2	..	2	..	..
170992	Window regulator handle—long (used on 413-414-415-416-417-418-423-424-425-426-427-428) (ivory knob)	..	4	4	4	4	2	2	..
178494	Window regulator handle—long (used on 413-414-415-416-417-418-423-424-425-426-427-428) (green tint knob)	..	4	4	4	4	2	2	..
174509	Window regulator handle—short (used on 423-424-425) (ivory knob)	..	2	2	3	..	..	..	..
178495	Window regulator handle—short (used on 423-424-425) (green tint knob)	..	2	2	3	..	..	..	..
170991	Window regulator handle—short (used on 413-414-415-417-427) (ivory knob)	..	2	2	2	..	2	..	..
178498	Window regulator handle—short (used on 413-414-415-417-427) (green tint inlay)	..	2	2	2	..	2	..	..
173499	Window regulator handle (used on 418-428-409-419-429)	..	..	..	..	..	..	1	2
156706	Window regulator handle escutcheon plate (used on 403-404-405-406-407-408)	6	..	6	7	4	4	3	..
170993	Window regulator handle escutcheon plate (used on 413-414-415-416-417-418-423-424-425-426-427-428) (ivory inlay)	..	6	6	7	4	4	2	..
178492	Window regulator handle escutcheon plate (used on 413-414-415-416-417-418-423-424-425-426-427-428) (green tint inlay)	..	6	6	7	4	4	2	..
174512	Window regulator handle escutcheon plate (used on 423-424-425) (ivory inlay)	..	2	2	3	..	..	..	..
178493	Window regulator handle escutcheon plate (used on 423-424-425) (green tint inlay)	..	2	2	3	..	..	..	..
173537	Window regulator handle escutcheon plate (used on 418-428-409-419-429)	..	..	..	..	..	..	1	2
133264	Window regulator handle escutcheon plate spring	6	6	6	7	4	4	3	2
132972	Window regulator handle pin	6	6	6	7	4	4	3	2
147910	Window regulator handle screw (used on 423-424-425)	..	2	2	3	..	..	..	..

packardinfo.com

Piece No.	Name	Number Required 403	413 423	404 414 424	405 415 425	406 416 426	407 417 427	408 418 428	409 419 429
174510	Window regulator handle spring (used on 423-424-425)	..	2	2	3	..	..	..	..
174511	Window regulator handle washer (used on 423-424-425)	..	2	2	3	..	..	..	..
171861	Window regulator partition (used on 405-415)	..	..	..	1	..	..	..	..
172253	Window regulator partition (used on 425)	..	..	..	1	..	..	..	..
169358	Window regulator—rear	..	..	..	..	..	..	1	..
169357	Window regulator—side—right (used on 403-413)	1	1	..	..	..	..	..	..
176095	Window regulator—side—right (used on 423)	..	1	..	..	..	..	..	..
169355	Window regulator—side—right (used on 407-417-427)	..	..	..	..	..	1	..	..
173011	Window regulator—side—right (used on 424-425)	..	..	1	1	..	..	..	..
174520	Window regulator—side—right (used on 404-405-414-415)	..	..	1	1	..	..	..	..
169358	Window regulator—side—left (used on 403-413)	1	1	..	..	..	..	..	..
176096	Window regulator—side—left (used on 423)	..	1	..	..	..	..	..	..
173012	Window regulator—side—left (used on 424-425)	..	..	1	1	..	..	..	..
174519	Window regulator—side—left (used on 404-405-414-415)	..	..	1	1	..	..	..	..
169356	Window regulator—side—left (used on 407-417-427)	..	..	..	..	..	1	..	..

WINDOW GLASS (NON-SHATTER)

174140	Window glass—door (used on 409-419-429)	..	..	..	..	..	..	..	2
169736	Window glass—door (used on 408-418-428)	..	..	..	..	..	..	2	..
169736	Window glass—door—front (used on 403-413-423-404-414-424-405-415-425-406-416-426-407-417-427)	2	2	2	2	2	2	..	..
169737	Window glass—door—rear (used on 403-404-405-413-414-415-423-424-425-406-416-426)	2	2	2	2	2	2	..	..
171011	Window glass—partition—center (used on 405-415-425)	..	..	..	1	..	..	..	..
171509	Window glass—partition—side—right (used on 405-415-425)	..	..	..	1	..	..	..	..
171508	Window glass—partition—side—left (used on 405-415-425)	..	..	..	1	..	..	..	..
169995	Window glass—rear (used on 403-404-405-406-407-413-414-415-416-417-423-424-425-426-427)	1	1	1	1	1	1	..	..
172284	Window glass—rear (used on 408-418-428)	..	..	..	..	..	..	1	..
169730	Window glass—side (used on 403-413-423)	2	2	..	..	..	..	..	..
169738	Window glass—side (used on 404-414-424-405-415-425)	..	..	2	2	..	..	..	..
172127	Window glass—side (used on 407-417-427)	..	..	..	..	..	2	..	..

WINDSHIELD AND WINDSHIELD CLEANER

169672	Windshield assembly (black enamel)	1	1	1	1	1	1	1	..
169697	Windshield assembly (lacquer) (used on 403-404-405-406-407-408)	1	..	1	1	1	1	1	..
173470	Windshield assembly	..	..	..	..	..	..	..	1
5311	Windshield to body screw (No. 8—32 x $\frac{5}{16}$" oval hd. mach.)	..	..	..	..	..	..	..	24
174288	Windshield cleaner to dash connecting tube assembly ($\frac{3}{16}$" tubing)	1	1	1	1	1	1	1	1
177835	Windshield cleaner to dash connecting tube assembly ($\frac{1}{4}$" tubing)	1	1	1	1	1	1	1	1
157476	Windshield cleaner to dash connecting tube union nut (with $\frac{3}{16}$" tubing)	1	1	1	1	1	1	1	1
157477	Windshield cleaner to dash connecting tube union nut (with $\frac{1}{4}$" tubing)	1	1	1	1	1	1	1	1
143360	Windshield cleaner to dash connecting tube clip—single (use with $\frac{3}{16}$" tubing)	3	3	3	3	3	3	3	3
177840	Windshield cleaner to dash connecting tube clip—single (with $\frac{1}{4}$" tubing)	3	3	3	3	3	3	3	3
5569	Screw (No. 10—32 x $\frac{1}{2}$" fill. hd.)	3	3	3	3	3	3	3	3
5500	Lock washer—(No. 10)	3	3	3	3	3	3	3	3
7003	Nut (No. 10—32 plain)	3	3	3	3	3	3	3	3
132878	Windshield cleaner hose—$\frac{5}{16}$" O. D. tubing	2	2	2	2	2	2	2	2
177848	Windshield cleaner hose—$\frac{3}{8}$" O. D. tubing	2	2	2	2	2	2	2	2
146848	Windshield cleaner motor—complete (with $\frac{3}{16}$" hose connection)	1	1	1	1	1	1	1	1
177850	Windshield cleaner motor—complete (with $\frac{1}{4}$" hose connection)	1	1	1	1	1	1	1	1
146884	Windshield cleaner motor attaching screw	2	2	2	2	2	2	2	2
146883	Windshield cleaner motor spacer	2	2	2	2	2	2	2	2

packardinfo.com

Piece No.	Name	Number Required 403	413 423	404 414 424	405 415 425	406 416 426	407 417 427	408 418 428	409 419 429
146850	Windshield cleaner wiper —complete	1	1	1	1	1	1	1	1
146887	Windshield cleaner wiper arm screw	1	1	1	1	1	1	1	1
169684	Windshield cowl weatherstrip	1	1	1	1	1	1	1	1
5475	Screw (No. 4—40 x $\frac{5}{16}$" flat hd.)	2	2	2	2	2	2	2	2
33170	Screw ferrule (No. 4)	2	2	2	2	2	2	2	2
176673	Windshield glass	1	1	1	1	1	1	1	..
176291	Windshield glass	..	..	..	..	..	..	..	1
178675	Windshield sash glass retainer assembly —upper	1	1	1	1	1	1	1	..
178676	Windshield sash glass retainer assembly —lower	1	1	1	1	1	1	1	..
173471	Windshield sash glass retainer weatherstrip	..	..	..	..	..	..	..	1
169673	Windshield sash glass retainer weatherstrip	1	1	1	1	1	1	1	..
173441	Windshield sash sector	..	..	..	..	..	..	..	2
148606	Windshield sash sector	2	2	2	2	2	2	2	..
173534	Windshield sash sector screw	..	..	..	..	..	..	..	2
162328	Windshield sash sector—screw	2	2	2	2	2	2	2	..
162326	Windshield sash sector bracket—right assembly	1	1	1	1	1	1	1	..
173532	Windshield sash sector bracket—right assembly	..	..	..	..	..	..	..	1
162325	Windshield sash sector bracket—left assembly	1	1	1	1	1	1	1	..
173533	Windshield sash sector bracket—left assembly	..	..	..	..	..	..	..	1
8030	Windshield sash sector bracket screw (No. 10—32 x $\frac{1}{2}$" oval hd. mach.)	4	4	4	4	4	4	4	..
5497	Screw (No. 10—32 x $\frac{1}{2}$" oval hd. mach.)	..	..	..	..	..	..	..	4
166451	Windshield sash sector clamp nut	..	..	..	..	..	..	..	2
148603	Windshield sash sector clamp nut	2	2	2	2	2	2	2	..
5359	Washer ($\frac{5}{16}$" plain—special)	2	2	2	2	2	2	2	2
166529	Windshield sash sector spring washer	2	2	2	2	2	2	2	2

TRIMMING

179414	Binding—1$\frac{1}{8}$" bias cut imitation colonial leather	x	x	x	x	x	x	x	x
139910	Binding cloth wire-on (used on 403-404-405-406-407-408-413-414-415-416-417-418)	x	x	x	x	x	x	x	x
167257	Binding cloth wire-on—extra large	x	x	x	..	x	..	..	..
167438	Binding cloth wire-on (cordless) (used on 404-405-414-415)	..	..	x	x	..	..	..	..
156596	Binding lace	x	x	x	x	x	x	x	..
127259	Binding carpet (used on 403-404-405-406-407-408)	x	..	x	x	x	x	x	..
156689	Binding—1$\frac{1}{8}$" leather colonial grain (used on 413-414-415-416-418-419-423-424-425-426-429)	..	x	x	x	x	x	x	x
156691	Binding—1$\frac{1}{8}$" leather imitation colonial grain (used on 407-408-409-417-418-419-427-428)	x	x	x	x	x	x	x	x
156693	Binding—leather colonial grain (double raised center) (used on 413-415-418-419-423-425-429)	..	x	..	x	..	..	x	x
156690	Binding—leather imitation colonial grain (DRC)	x	x	x	x	x	x	x	x
167701	Binding—rattan covered (used on 423-424-425-426-427-428)	..	x	x	x	x	x	x	..
167914	Buckram—cotton back (used on 403-404-405-406)	x	..	x	x	x	..	..	..
29618	Buckram—2 ply—38" wide	..	..	..	..	..	..	..	x
29595	Burlap (10-oz. 40" wide)	..	..	x	x	..	x	..	..
103840	Carpet—grey horsehair (36" wide)	..	..	..	..	..	..	..	x
113980	Carpet—woolen (36" wide) (used on 403-404-405-406-407-408-413-414-415-416-417-428)	x	x	x	x	x	x	x	..
166901	Carpet—hair	..	..	..	..	..	x	x	x
33883	Celluloid—sheet 20 x 50" (used on 403-404-406-408-409-413-414-416-418-419-423-424-425-426-427-428-429)	x	x	x	x	x	x	x	x
29651	Cloth—cotton (36" wide)	x	x	x	x	x	x	x	x
33848	Cord twisted paper $\frac{5}{32}$"	x	x	x	x	x	x	x	x
172663	Cord welt—enameled drill (used on 405)	..	..	..	x	..	..	..	..
113822	Cord welt—enameled drill	x	x	x	x	x	x	x	..
159187	Cord welt ($\frac{3}{4}$ x $\frac{1}{4}$" colonial leather)	..	..	..	..	..	..	x	x
156696	Cord welt ($\frac{11}{16}$ x $\frac{3}{16}$" leather colonial grain)	..	..	..	x	..	..	x	x
127253	Cord welt—seaming lace ($\frac{9}{32}$ x $\frac{5}{8}$")	x	x	x	x	x	x	x	..
173243	Cord welt—seaming lace ($\frac{11}{16}$ x $\frac{3}{16}$")	x	x	x	x	x	x	x	..

packardinfo.com

Piece No.	Name	Number Required 403	413 423	404 414 424	405 415 425	406 416 426	407 417 427	408 418 428	409 419 429
161787	Drill white cotton (7-oz.) 36″ wide	x	x	x	x	x	x	x	x
105025	Drill enameled, 50″ wide—long grain	x	x	x	x	x	x	x	..
169249	Drill sized plain, 36″ wide (used on 403-406-413-414-415-416-417-418-423-424-425-426-427-428)	x	x	x	x	x	x	x	..
105024	Enameled muslin, 36″ wide (used on 413-414-416-417-418-423-424-426-427-428)	..	x	x	..	x	x	x	..
157364	Fabric —cork faced ($\frac{1}{32}$ x 1 $\frac{1}{2}$″ liner)	x	x	x	x	x	x	x	x
145559	Fabric—plush mohair, 54″ wide (used on 423-424-425-426-427-428)	..	x	x	x	x	x	x	..
113981	Fabric (58″) upholstering	x	x	x	x	x	x	x	..
142820	Fabric top material, 54″ wide (Burbank 0-2 drab)	..	..	..	..	..	..	..	x
115026	Fabric (58″) upholstering head lining	x	x	x	x	x	x	x	x
174196	Fabric (58″) head lining	x	..	..	..	..	..	..	..
174513	Fabric (54″) filled mole skin	x	x	x	x	x	x	x	x
156541	Fabric—roof covering (Duratex) two-ply aqua-proof quantity grain deck A, 45″ wide	x	x	x	x	x	x	x	..
156692	Gimp ($\frac{1}{2}$″) imitation black colonial leather	x	x	x	x	x	x	x	x
156857	Gimp ($\frac{3}{4}$″)—imitation colonial leather (used on 403-404-405-406-407-408)	..	x	x	x	x	x	x	..
175234	Gimp ($\frac{3}{4}$″)—leather colonial grain (used on 413-414-415-416-417-418-423-424-425-426-427-428)	..	x	x	x	x	x	x	..
174201	Gimp ($\frac{1}{2}$″) leather imitation colonial grain	x	x	x	x	x	x	x	x
163172	Kersey felt, 45″ wide	x	x	x	x	x	x	x	x
127260	Lace pasting (used on 404-405-413-414-415-423-424-425-426-427-428)	..	x	x	x	x	x	x	
159984	Leather imitation black patent leather finish	x	x	x	x	x	x	x	..
123507	Leather imitation (Textileather Company No. 95153 color .090 or its equivalent) (used on 408-409-418-419-428-429)	..	..	..	..	..	..	x	x
156346	Leather imitation colonial grain	x	x	x	x	x	x	x	x
156348	Leather trimming (colonial grain)	..	x	..	x	..	x	x	x
156347	Leather binding colonial grain	x	x	x	x	x	x	x	x
140935	Paper board ($\frac{1}{2}$ x 48″)	x	x	x	x	x	x	x	x
179670	Poultry netting 36″ wide 1″ mesh No. 101	x	x	x	x	x	x	x	..
159951	Rattan ($\frac{5}{16}$″ half oval) (used on 423-424-425-426-427-428)	..	x	x	x	x	x	x	..
140900	Rubber riser ($\frac{1}{4}$″ half round)	x	x	x	x	x	x	x	..
115023	Rubber riser ($\frac{3}{8}$″ half oval) (used on 405)	..	..	..	x	..	..	..	..
176806	Rubber strip	x	x	x	x	x	x	x	..
29334	Silesia brown, 36″ wide	x	x	x	x	x	x	x	..
113983	Silk curtain, 22″ wide (used on 413-414-415-416-417-418-423-424-425-426-427-428)	x	x	x	x	x	x	x	..
174743	Silk curtain, 22″ wide (used on 403-404-405-406-407-408)	x	..	x	x	x	x	..	
29652	Tacks japanned lace (2-oz.)	x	x	x	x	x	x	x	..
106964	Tacks gimp japanned (3-oz.)	x	x	x	x	x	x	x	x
113912	Tacks gimp, japanned (4-oz.)	x	x	x	x	x	x	x	x
29657	Tacks japanned lace (4-oz.)	x	x	x	x	x	x	x	x
128467	Tacks japanned lace (8-oz.)	..	..	..	..	..	..	x	x
29662	Tacks trimmers (1 $\frac{1}{2}$-oz.) japanned	x	x	x	x	x	x	x	x
29663	Tacks trimmers (2 $\frac{1}{2}$-oz.) japanned	x	x	x	x	x	x	x	x
29664	Tacks trimmers (4-oz.) japanned	x	x	x	x	x	x	x	x
29666	Tacks trimmers (10-oz.) japanned	x	x	x	x	x	x	x	x
113789	Tacks gimp (6-oz.) japanned	x	x	x	x	x	x	x	x
29637	Thread No. EE spool silk	x	x	x	x	x	x	x	x
166550	Thread No. 70 hard finish cotton	x	..	..	..	..	..	..	..
29638	Thread "A" spool silk	x	x	x	x	x	x	x	x
156681	Thread "D" spool silk	x	x	x	x	x	x	x	x
29640	Thread "EE" No. 18 or Dean and Sherk No. 12-4	x	x	x	x	x	x	x	x
127808	Thread No. 20 4 silk finish Dean and Sherk	x	x	x	x	x	x	x	..
167433	Thread 3-36 silk finish cotton	x	x	x	x	x	x	x	x
167434	Thread 3-60 silk finish cotton	x	x	x	x	x	x	x	x
157022	Thread Lincoln No. 6	x	x	x	x	x	x	x	x
157586	Thread No. 1201 cord	x	x	x	x	x	x	x	x
29625	Twine No. 252 Yazoo	x	x	x	x	x	x	x	x

packardinfo.com

Piece No.	Name	Number Required 403	413 423	404 414 424	405 415 425	406 416 426	407 417 427	408 418 428	409 419 429
45754	Velvet black (36" wide)	..	..	..	..	..	..	..	x
29627	Wadding—33" blue sheet No. 532	x	x	x	x	x	x	x	x
139457	Wadding—6" white cotton (unbleached rolled 8-oz.)	x	x	x	x	x	x	x	x
172344	Wadding—4 1/2" white cotton (Grade A unbleached rolled 5 1/2-oz.) (used on 423-424-425-426-427-428-429)	..	x	x	x	x	x	x	x
172470	Wadding—4" white cotton (unbleached rolled 5-oz.) (used on 403-404-405-406-407-408-409-415)	x	..	x	x	x	x	x	x
128040	Wadding—33" white sheet (used on 404-405-413-414-415-416-417-418-419-423-424-425-426-427-428-429)	..	x	x	x	x	x	x	x
62759	Webbing, 3" wide—jute	..	..	x	x	..	x	..	..
127254	Windlace—cloth (used on 403-404-405-406-407-408-413-414-415-416-417-418)	x	x	x	x	x	x	x	..
178962	Windlace—colonial leather	..	..	..	..	..	..	..	x
176181	Windlace—leather colonial grain (used on 403-404-405-406-407-408-409-413-414-415-416-417-418-419)	x	x	x	x	x	x	x	..
148742	Windlace—leather colonial grain (used on 405-409-415-419)	..	..	..	x	..	..	..	x
159950	Wire screen—16-mesh No. 34 wire, 12" wide	x	x	x	x	x	x	x	x

packardinfo.com

ENCLOSED BODY ATTACHING PARTS

Piece No.	Name	Number Required 463	473	474 464	475 465	476 466	477 467	478 468	479 469	483 493
7618	Body to frame bolt No. 1 carriage (7/16 20 x 3")	2	2	2	2	2	2	2	2	2
5833	Body to frame bolt No. 2 (7/16 20 x 3 1/8" hex. hd. mach.)	2	2	2	2	2	2	2	2	2
5791	Body to frame bolt No. 3 (7/16 20 x 3 1/8" flat hd. mach.)						2			
7834	Body to frame bolt No. 3 (7/16 20 x 3 1/8" hex. hd. mach.)	2	2	2	2	2				2
5282	Body to frame bolt No. 3 (7/16 20 x 3 1/2" hex. hd.)			2	2			2	2	
7839	Body to frame bolt No. 4 (7/16 20 x 2 1/2" hex. hd. mach.)							2	2	
5791	Body to frame bolt No. 4 (7/16 - 20 x 3 1/8" hex. hd. mach.)	2	2	2	2					2
7834	Body to frame bolt No. 4 (7/16 - 20 x 3 1/8" hex. hd. mach.)					2	2			
5671	Body to frame bolt No. 5 (7/16 - 20 x 5 3/8" hex. hd. mach.)	2	2	2	2		2	2	2	2
166462	Body to frame bolt No. 5 carriage (7/16 - 20 x 7 3/8" skew hd.)					2				
131809	Body to frame bolt washer - large (7/16" plain - special)	2	2	2	2	2	4	4	4	2
131046	Body to frame bolt washer - small (7/16" plain - special)	12	12	12	12	10	12	12	12	12
5508	Body to frame bolt lockwasher (7/16")	6	6	8	8	6	8	8	8	8
5806	Body to frame bolt lockwasher	4	4	2	2	4	2	2	2	2
7007	Body to frame bolt nut (7/16" - 20 plain)	10	10	8	8	10	10	10	10	8
182439	Body to frame bolt nut lock	6	6	4	4	4	4	4	4	4
173486	Body to frame liner (3/16" thick)	x	x	x	x	x	x	x	x	x
173488	Body to frame liner (3/16" thick)					x	x	x	x	
175230	Body to frame liner (1/4" thick)	x	x	x	x	x	x	x	x	x
175231	Body to frame liner (5/16" thick)	x	x	x	x	x	x	x	x	x
180079	Body to frame liner (3/16" thick)	x	x	x	x					
183519	Body to frame liner (5/16" thick)	x		x	x					
183369	Body to frame liner (3/16" thick)		x			x	x	x	x	x
183520	Body to frame liner (5/16" thick)		x			x	x	x	x	x
167924	Body to frame liner hand brake lever insulator	1	1	1	1	1	1	1	1	1
173487	Body hold down bolt bracket liner (3/8" thick)	x	x	x	x	x	x	x	x	x
183518	Body hold down bolt bracket liner (1/2" thick)	x	x	x	x	x	x	x	x	x
183517	Body hold down bolt bracket liner (3/16" thick)	x	x	x	x	x	x	x	x	x
133104	Body hold down bolt bracket liner (1/32" thick)	x	x	x	x	x	x	x	x	x

ARM REST AND ARM SLING

181711	Folding arm rest (trimmed) assembly (used on 473-4-5)		1	1	1					
185401	Folding arm rest (trimmed) assembly									1
183513	Folding arm rest (trimmed) assembly (used on 476)					1				
183514	Folding arm rest (trimmed) assembly (used on 477)						1			
181930	Folding arm rest support bracket assembly (used on 476)					1				
181528	Folding arm rest support bracket assembly (used on 473-474-475)		1	1	1					1
181911	Folding arm rest support bracket assembly (used on 477 only)						1			
171580	Screw (No. 10 - 32 x 5/8" flat hd. mach.) (used on 473-474-5-6-7)		6	6	6	6	6			6
7824	Screw (1/4 - 28 x 5/8" hex. hd.) (used on 473-474-5-6-7)		4	4	4	4	4			4
5502	Lockwasher (1/4" std.) (used on 473-474-5-6-7)		4	4	4	4	4			4
7004	Nut (1/4" - 28 plain) (used on 473-474-5-6-7)		4	4	4	4	4			4
173515	Arm rest - rosette (used on 473-476-477)		2			2	2			
170652	Arm rest smoking case ash receiver (used on 463-473-464-5-7)	1	1	1	1		1			1
181995	Arm rest smoking case cigar lighter - complete (used on 463-473-464-5-7)	1	1	1	1		1			1
182377	Arm rest smoking case cigar lighter tip (used on 463-473-464-5-7)	1	1	1	1		1			1
170655	Arm rest - vanity case - mirror		1							
181998	Arm rest - vanity case - mirror (used on 463-4-5-7)	1		1	1		1			1
181999	Arm rest - vanity case memorandum book (used on 463-4-5-7)	1		1	1		1			1
170656	Arm rest - vanity case memorandum book		1							
140942	Arm rest - vanity case memorandum book pencil		1							
180082	Arm rest - vanity case memorandum book pencil (used on 463-4-5-7)	1		1	1		1			1
173649	Arm sling (used on 474-5)			2	2					
171899	Arm sling rod - left (used on 474-5)			1	1					
173490	Arm sling rod - right (used on 474-5)			1	1					

packardinfo.com

BONNET DASH LINER

Piece No.	Name	Number Required 463	473	474 464	475 465	476 466	477 467	478 468	479 469	483 493
139804	Bonnet dash liner (in rolls)	x	x	x	x	x	x	x	x	x
46527	Rivet (No. 632 — $\frac{9}{64}$ x $\frac{1}{4}$" flat hd. tubular)	34	34	34	34	34	34	34	34	34

CABLES

167069	Body wiring cable 19 strand No. 16 (green braid)	x	x	x	x	x	x	x	x	x
166406	Body wiring cable 19 strand No. 16 (red braid)	x	x	x	x	x	x	x	x	x
166404	Body wiring cable 19 strand No. 16 (black braid)	x	x	x	x	x	x	x	x	x
166405	Body wiring cable 19 strand No. 16 (black with red tracer braid)	..	..	.	x	..	..	..	..	..
29254	Body wiring cable staple insulated	x	x	x	x	x	x	x	x	x
48202	Body wiring cable terminal	x	x	x	x	x	x	x	x	x
33287	Body wiring cable terminal	x	x	x	x	x	x	x	x	x
36111	Body wiring cable terminal insulator	x	x	x	x	x	x	x	x	x

CARPETS

179586	Carpet assembly folding seat floor (464-465)	..	..	2	2	..	..	..	..	..
179599	Carpet assembly folding seat floor (474-475)	..	..	2	2	..	..	..	..	..
182398	Carpet assembly front floor	..	..	1	1	..	..	..	..	..
185414	Carpet assembly front floor	..	..	..	..	..	..	..	..	1
175110	Carpet assembly front floor	..	..	..	..	..	1	..	..	..
182396	Carpet assembly front floor	1	1	..	..	1	..	1	1	..
180086	Carpet assembly rear floor	1	..	..	..	..	..	..	..	..
185415	Carpet assembly rear floor	..	..	..	..	..	..	..	..	1
180088	Carpet assembly rear floor (used on 467)	..	..	..	..	..	1	..	..	..
180087	Carpet assembly rear floor (used on 464-5)	..	..	1	1	..	..	..	..	..
180089	Carpet assembly rear floor (used on 477)	..	..	..	..	..	1	..	..	..
178282	Carpet assembly rear floor (used on 474-475)	..	..	1	1	..	..	..	..	..
180092	Carpet assembly rear floor (used on 473)	..	1	..	..	..	..	..	..	..
180090	Carpet assembly rear floor (used on 466)	..	..	..	..	1	..	..	..	..
180091	Carpet assembly rear floor (used on 476)	..	..	..	..	1	..	..	..	..
180094	Carpet assembly rumble seat compartment floor	..	..	..	..	..	..	1	1	..
180093	Carpet assembly rear compartment floor	..	..	..	..	..	1	..	..	..

DICTOGRAPH

147649	Dictograph receiver	..	..	..	1	..	..	..	..	..
175113	Dictograph transmitter bracket	..	..	..	1	..	..	..	..	..
175826	Dictograph transmitter and winder assembly	..	..	..	1	..	..	..	..	..

DOME LIGHT

180159	Dome light (used on 473-474-475-476-477-478)	..	1	1	1	1	1	1	..	..
178500	Dome light (used on 463-464-465-466-467-468)	1	..	1	1	1	1	1	..	..
102585	Dome light bulb (Mazda No. 81) 6 C-P. G-6	1	1	1	1	1	1	1	..	..
180637	Dome light glass and rim (used on 473-474-475-476-477-478)	..	1	1	1	1	1	1	..	..
178513	Dome light glass and rim (used on 463-464-465-466-467-468)	1	..	1	1	1	1	1	..	..
180636	Dome light reflector	1	1	1	1	1	1	1	..	..
180283	Dome light switch (used on 473-474-476-477-478)	..	1	1	..	1	1	1	..	..
170997	Dome light switch (used on 463-464-466-467-468)	1	..	1	..	1	1	1	..	..
180284	Dome light switch (3 point) (used on 475)	..	..	..	2	..	..	..	..	..
141645	Dome light switch front (3 point) (used on 465)	..	..	..	1	..	..	..	..	..
170998	Dome light switch rear (3 point) (used on 465)	..	..	..	1	..	..	..	..	..

DOORS

All doors must be adjusted to each respective body.

To obtain a satisfactory replacement of doors, it is advisable to return the damaged door to be repaired, if possible. If this cannot be done, the customer assumes the responsibility of the new door being a satisfactory fit.

Specify on all orders the upholstery material, color of paint and striping.

185079	Door front right trimmed assembly (used on 463-4-6-7)	1	..	1	..	1	1	..	..	..
185081	Door front right trimmed assembly (used on 465)	..	..	..	1	..	..	..	..	..

packardinfo.com

Piece No.	Name	Number Required								
		463	473	474 464	475 465	476 466	477 467	478 468	479 469	484 493
185088	Door front right trimmed assembly (used on 468)							1		
185090	Door front right trimmed assembly (used on 469)								1	
185402	Door front right trimmed assembly									1
185080	Door front right trimmed assembly (used on 473-6-7)		1			1	1			
185089	Door front right trimmed assembly (used on 478)							1		
185082	Door front right trimmed assembly (used on 474)			1						
185083	Door front right trimmed assembly (used on 475)				1					
185091	Door front right trimmed assembly (used on 479)								1	
185072	Door front left trimmed assembly (used on 463-4-6-7)	1		1		1	1			
185403	Door front left trimmed assembly									1
185074	Door front left trimmed assembly (used on 465)				1					
185087	Door front left trimmed assembly (used on 479)								1	
185073	Door front left trimmed assembly (used on 473-6-7)		1			1	1			
185085	Door front left trimmed assembly (used on 478)							1		
185076	Door front left trimmed assembly (used on 475)				1					
185075	Door front left trimmed assembly (used on 474)			1						
185084	Door front left trimmed assembly (used on 468)							1		
185086	Door front left trimmed assembly (used on 469)								1	
185092	Door rear left trimmed assembly	1								
185098	Door rear left trimmed assembly (used on 464)			1						
185405	Door rear left trimmed assembly									1
185099	Door rear left trimmed assembly (used on 465)				1					
185095	Door rear left trimmed assembly (used on 466)					1				
185097	Door rear left trimmed assembly		1							
185096	Door rear left trimmed assembly (used on 476)					1				
185100	Door rear left trimmed assembly (used on 474-5)			1	1					
185101	Door rear right trimmed assembly		1							
185404	Door rear right trimmed assembly									1
185107	Door rear right trimmed assembly (used on 464)			1						
185108	Door rear right trimmed assembly (used on 465)				1					
185104	Door rear right trimmed assembly (used on 466)					1				
185106	Door rear right trimmed assembly		1							
185105	Door rear right trimmed assembly (used on 476)					1				
185109	Door rear right trimmed assembly (used on 474-475)			1	1					

DOOR PARTS

181020	Door anti-rattler	8	8	8	8	8	4	4		4
181021	Door anti-rattler shim	x	x	x	x	x	x	x		x
175426	Door bumper ($1\frac{11}{32}$")	x	x	x	x	x	x	x	x	x
175427	Door bumper ($1\frac{13}{32}$")	x	x	x	x	x	x	x	x	x
175428	Door bumper ($1\frac{9}{32}$")	x	x	x	x	x	x	x	x	x
164679	Door check strap	4	4	4	4	4	2	2	2	4
164359	Door check strap fastener plate	4	4	4	4	4	2	2	2	4
167250	Door check strap guide	2	2	2	2	2				
164358	Door check strap stop plate	2	2	2	2	2	2	2		
179680	Door check strap stop plate								2	2
184659	Door dove-tail female	4	4	4	4	4	2	2	2	4
119298	Door dove-tail male	4	4	4	4	4	2	2	2	4
169768	Door hinge front center left	1	1	1	1	1	1	1		
173539	Door hinge front center left								1	1
169767	Door hinge front center right	1	1	1	1	1	1	1		
173538	Door hinge front center right								1	1
169766	Door hinge front lower left	1	1	1	1	1	1	1	1	1
169765	Door hinge front lower right	1	1	1	1	1	1	1	1	1
173526	Door hinge front upper left								1	1
169770	Door hinge front upper left	1	1	1	1	1	1	1		
173525	Door hinge front upper right								1	1
169769	Door hinge front upper right	1	1	1	1	1	1	1		
142606	Door hinge blank rear	x	x	x	x	x				
170770	Door hinge rear upper right	1	1	1	1	1				

packardinfo.com

Piece No.	Name	Number Required								
		463	473	474 464	475 465	476 466	477 467	478 468	479 469	483 403
170771	Door hinge rear upper left	1	1	1	1	1				
5697	Screw (1/4 28 x 3/8" oval hd. mach.)	22	22	22	22	22	22	22	22	22
5699	Screw (1/4 28 x 13/32" flat hd. mach.)	16	16	16	16	16	16	16	16	16
5854	Screw (1/4 28 x 1 1/4" flat hd. mach.)	6	6	6	6	6				6
5820	Screw (1/4 28 x 1 31/32" oval hd. mach.)	6	6	6	6	6				6
5701	Screw (1/4 28 x 9/16" flat hd. mach.)	8	8	8	8	8	8	8	8	8
5396	Lockwasher (1/4")	46	46	46	46	46	46	46	46	46
174146	Door hinge pillar finishing plate—right								1	1
174147	Door hinge pillar finishing plate—left								1	1
140237	Door hinge pin (9/32" dia.)	8	8	8	8	8	4	4	4	8
169771	Door hinge pin (5/16" dia.)	4	4	4	4	4	2	2	2	4
172220	Door hinge pin bushing—oilless (use with 9/32" dia. pin)	x	x	x	x	x	x	x	x	x
173965	Door hinge pin bushing—oilless (use with 5/16" dia. pin)	x	x	x	x	x	x	x	x	x
169772	Door hinge pin nut	4	4	4	4	4	2	2	2	2
5500	Door hinge pin lock washer	4	4	4	4	4	2	2	2	2
183170	Door lock—front—right	1	1	1	1	1	1	1	1	
183170	Door lock—front—right									2
183171	Door lock—front—left	1	1	1	1	1	1	1	1	
183171	Door lock—front—left									2
180885	Door lock—rear—right	1	1	1	1	1				
180884	Door lock—rear—left	1	1	1	1	1				
5829	Screw (No. 10—32 x 7/8" flat hd.)	8	8	8	8	8	4	4	4	8
5491	Lockwasher (3/16")	8	8	8	8	8	4	4	4	8
181722	Door lock handle (used on 469)								1	3
181723	Door lock handle (with key lock) (used on 469)								1	1
181496	Door lock handle (used on 463-4-5-6-7-8)	3		3	2	3	1	1		
181497	Door lock handle (with key lock) (used on 463-4-5-6-7)	1		1	1	1	1	1		
181503	Door lock handle (with key lock) (used on 465 only)				1					
181719	Door lock handle (used on 479 only)								1	
181720	Door lock handle (with key lock) (used on 479 only)								1	
181042	Door lock handle (used only on 473-4-5-6-7-8)		3	3	2	3	1	1		
181049	Door lock handle (with key lock) (used only on 473-4-5-6-7-8)	1	1	1	1	1	1	1		
181502	Door lock handle (with key lock) (used on 475 only)				1					
185033	Screw	1	1	1	2	1	1	1	1	1
184858	Washer	1	1	1	2	1	1	1	1	1
5861	Lockwasher (No. 8 shakeproof)	1	1	1	2	1	1	1	1	1
180100	Door lock lever assembly—left	1	1	1	1	1	1	1	1	2
180099	Door lock lever assembly—right	1	1	1	1	1	1	1	1	2
183388	Door lock lever connecting link (used on 474-5)			2	2					
183082	Door lock lever connecting link (used on 463-473-464-465-466-476-467-477-468-478-469-479)	2	2	2	2	2	2	2	2	4
180155	Door lock lever ferrule (used on 473-4-5-6-7-8)		4	4	4	4	2	2		
172203	Door lock lever ferrule (used on 463-4-5-6-7-8-9-479)	4		4	4	4	2	2	2	4
162320	Door lock lever guide	2	2	2	2	2				
180160	Door lock lever handle (used on 473-474-475-476-477-478)		4	4	4	4	2	2		
178491	Door lock lever handle (used on 413-423-414-424-415-425-416-426-417-427-418-428) (green tint)		4	4	4	4	2	2		
180634	Door lock lever handle (used on 463-464-465-466-467-468-469-479)	4		4	4	4	2	2	2	4
147039	Door lock lever handle escutcheon plate	4	4	4	4	4	2	2	2	4
174148	Door lock pillar finishing plate—right								1	
174149	Door lock pillar finishing plate—left								1	
191173	Door lock plunger adjusting screw	x	x	x	x	x	x	x	x	x
182386	Door lock striker	4	4	4	4	4				4
170689	Door lock striker						2	2	2	
182387	Door lock striker adjusting plate	4	4	4	4	4				4
170336	Door lock striker nut	2	2	2	2	2				2
170335	Door lock striker screw	2	2	2	2	2				2
180156	Door pull to handle (used on 473-474-475-476)		2	2	2	2				
8224	Screw (No. 10—32 x 5/8" flat head) (used on 473-474-475-476)		4	4	4	4				

Piece No.	Name	Number Required 463	473	474 464	475 465	476 466	477 467	478 468	479 469	483 493
171005	Door scuff plate front left (used on 463-464-465-466-467-468-469)	1	..	1	1	1	1	1	1	..
179721	Door scuff plate—front left (used on 474-475)	..	..	1	1	..	..	..	..	..
181499	Door scuff plate—front—left (used on 473-476-477-478-479)	..	1	..	..	1	1	1	1	1
171004	Door scuff plate—front right (used on 463-464-465-466-467-468-469)	1	..	1	1	1	1	1	1	..
181498	Door scuff plate—front—right (used on 473-476-477-478-479)	..	1	1	1	1	1	1	1	1
179722	Door scuff plate—front—right (used on 474-475)	..	..	1	1	..	..	..	..	..
169952	Door scuff plate—rear—left	1	..	..	..	..	..	..	..	..
171007	Door scuff plate—rear—left (used on 464-465-466)	..	..	1	1	1	..	..	..	..
181501	Door scuff plate—rear—left (used on 473-476)	..	1	..	..	1	..	..	..	..
179723	Door scuff plate—rear—left (used on 474-475)	..	..	1	1	..	..	..	..	..
171006	Door scuff plate—rear—right (used on 464-465-466)	..	..	1	1	1	..	..	..	..
179724	Door scuff plate—rear—right (used on 474-475)	..	..	1	1	..	..	..	..	..
181500	Door scuff plate—rear—right (used on 473-476)	..	1	..	..	1	..	..	..	1
169951	Door scuff plate—rear—right	1	..	..	..	..	..	..	..	..

FASTENERS

161793	Fastener eyelet—short prong curtain carrier strap	..	..	..	..	..	..	..	x	..
161792	Fastener eyelet plate—short prong—curtain carrier strap	..	..	..	..	..	..	..	x	..
177609	Fastener plate—prong curtain carrier strap	..	..	..	..	..	..	..	x	..
177608	Fastener single prong—curtain carrier strap	..	..	..	..	..	..	..	x	..
143578	Snap fastener machine screw post—top side lower	..	..	..	..	..	..	..	x	..
185411	Snap fastener machine screw post—top (chromium plate)	..	..	..	..	..	..	..	..	x
175757	Snap fastener rivet post arm rest flap (used on 473)	..	x	..	..	..	..	..	..	..
139158	Snap fastener rivet post male—top side rail	..	..	..	..	..	..	..	x	x
185409	Snap fastener rivet post male top (nickel)	..	..	..	..	..	..	..	..	x
139158	Snap fastener rivet post—male top side lower	..	..	..	..	..	..	..	x	x
139157	Snap fastener rivet post female—top side rail	..	..	..	..	..	..	..	x	x
112058	Snap fastener screw post—arm rest (used on 473)	..	x	..	..	..	..	..	..	..
112058	Snap fastener screw post—carpet	x	x	x	x	x	x	x	x	x
112058	Snap fastener screw post top envelope	..	..	..	..	..	..	..	x	..
169692	Snap fastener screw post washer rear floor carpet (used on 473-474-475-476-477)	..	x	x	x	x	x	..	..	..
185408	Snap fastener socket cap—top (chromium plate)	..	..	..	..	..	..	..	..	x
115799	Snap fastener socket carpet	x	x	x	x	x	x	x	x	x
137510	Snap fastener socket—female—arm rest (used on 473)	x	..	..	..	..	..	..	..	..
105410	Snap fastener socket—female—top (chromium plate)	..	..	..	..	..	..	..	..	x
139150	Snap fastener socket—female—top envelope	..	..	..	..	..	..	..	x	x
139150	Snap fastener socket—female—top side rail	..	..	..	..	..	..	..	x	x
139150	Snap fastener socket—female—top side lower	..	..	..	..	..	..	..	x	x
115798	Snap fastener socket ring—short prong—carpet	x	x	x	x	x	x	x	x	x
139159	Snap fastener top top envelope	..	..	..	..	..	..	..	x	x
112054	Snap fastener top	..	..	..	..	..	..	..	..	x
105413	Snap fastener wood screw post—top (chromium plate)	..	..	..	..	..	..	..	..	x
106755	Snap fastener wood screw post—single top curtain (chromium plate)	..	..	..	..	..	..	..	..	x
105412	Snap fastener wood screw post—extra long—top (chromium plate)	..	..	..	..	..	..	..	..	x

FLOOR BOARD

181927	Floor board—front assembly	1	1	..	..	1	..	1	1	1
169956	Floor board front assembly	..	..	..	..	..	1	..	..	..
178473	Floor board—front assembly	..	..	1	1	..	..	..	..	..
175685	Floor board—rear assembly	..	1	..	..	..	..	..	..	..
181018	Floor board—rear assembly	1	..	..	..	..	..	..	..	..
180861	Floor board—rear assembly (used on 464-465)	..	..	1	1	..	..	..	..	..
178517	Floor board—rear assembly (used on 474-475)	..	..	1	1	..	..	..	..	..

packardinfo.com

FOLDING SEAT

Piece No.	Name	Number Required 463	473	474 464	475 465	476 466	477 467	478 468	479 469	483 493
180717	Folding seat trimmed assembly (used on 474-475)			2	2					
180712	Folding seat trimmed assembly (used on 464-465)			2	2					
181046	Folding seat untrimmed assembly (used on 474-475)			2	2					
184447	Folding seat untrimmed assembly (used on 464-465)			2	2					
184451	Folding seat back untrimmed assembly (used on 464-465)			2	2					
169102	Folding seat back untrimmed assembly (used on 474-475)			2	2					
167945	Folding seat back to seat frame screw			4	4					
171692	Folding seat frame assembly (used on 474-475)			2	2					
184456	Folding seat frame assembly (used on 464-465)			2	2					
5580	Screw (No. 10 32 x 1" F. H. mach.)			16	16					
5529	Screw ($\frac{1}{4}$--28 x $1\frac{3}{8}$" F. H. mach.)			8	8					
8220	Screw ($\frac{1}{4}$--28 x $1\frac{1}{2}$" F. H. mach.)			8	8					
7003	Nut (No. 10--32)			16	16					
7004	Nut ($\frac{1}{4}$"--28)			16	16					
3867	Washer ($\frac{3}{16}$" plain)			4	4					
184455	Folding seat frame side--left (used on 464-465)			2	2					
171698	Folding seat frame side--left (used on 474-475)			2	2					
184454	Folding seat frame side--right (used on 464-465)			2	2					
171703	Folding seat frame side--right (used on 473-475)			2	2					
184024	Folding seat handle			2	2					
100100	Folding seat pivot pin			4	4					
170341	Folding seat pivot pin retainer			2	2					
8204	Screw ($\frac{1}{4}$--28 x 2" flat hd. mach.)			4	4					
184446	Folding seat support--left (used on 464-465)			2	2					
180632	Folding seat support--left (used on 474-475)			2	2					
184445	Folding seat support--right (used on 464-465)			2	2					
180633	Folding seat support--right (used on 474-475)			2	2					
130869	Folding seat support to seat frame screw			4	4					
7006	Nut ($\frac{3}{8}$"--24 plain)			4	4					
5506	Lockwasher ($\frac{3}{8}$")			4	4					

FOOT REST

181146	Foot rest assembly (used on 463-464-465)	1		1	1					
173851	Foot rest assembly (used on 473-474-475)		1	1	1					
147949	Foot rest assembly (used on 413-4-5)		1	1	1					
79574	Foot rest assembly							1	1	
122146	Foot rest pivot stud							2	2	
145407	Foot rest pivot stud (used on 463-4-5)	2		2	2					
147963	Foot rest pivot stud		2							
156598	Foot rest pivot stud (used on 474-5)			2	2					
180134	Nut		2					2	2	
174151	Foot rest pivot stud spacer (used on 474-5)			2	2					

FRONT SEAT

142793	Front seat back compartment lid hinge							1	1	
180953	Front seat back compartment lid hinge									3
114525	Front seat back compartment lid lifter							1		
148321	Front seat back compartment lid lock								1	
148304	Front seat back compartment lid lock									1
164259	Front seat back compartment lid lock escutcheon plate								1	
180954	Front seat back compartment lid lock striker									1
157080	Front seat back compartment lid lock striker								1	
181695	Front seat (right) counterbalance assembly						1			
181703	Front seat (right) counterbalance spring left						1			
181702	Front seat (right) counterbalance spring right						1			
181989	Front seat (right) counterbalance spring adjusting lever						2			
181697	Front seat (right) counterbalance spring lever and pin assembly						1			

packardinfo.com

Piece No.	Name	Number Required 463	473	471 464	475 465	476 466	477 467	478 468	479 469	483 493
5822	Front seat (right) counterbalance spring adjusting lever screw ($\frac{1}{4}$ 28 x $\frac{5}{8}$" hex. hd. mach.)						2			
5502	Lockwasher ($\frac{1}{4}$" std.)						2			
7004	Nut ($\frac{1}{4}$" 28 plain std.)						2			
179717	Front seat (left) frame carrier bracket	1	1	1		1		1	1	
4242	Rivets ($\frac{3}{16}$ x $\frac{1}{2}$" countersunk hd.)	10	10	10		10		10	10	
7604	Front seat hinge bolt ($\frac{1}{4}$—28 x $1\frac{5}{8}$" carriage)						6			
62065	Washer ($\frac{1}{4}$" plain)						6			
5502	Lockwasher ($\frac{1}{4}$")						6			
7004	Nut ($\frac{1}{4}$"-28 plain)						6			
173150	Front seat locking lever						1			
173513	Front seat locking lever pin						1			
173148	Front seat locking lever bracket						1			
173313	Front seat locking lever spring						1			
180842	Front seat left locking stud	1	1	1		1		1	1	
183528	Front seat left locking spring	1	1	1		1		1	1	
180666	Front seat left operating spring	1	1	1		1		1	1	
180845	Front seat left support bar assembly	1	1	1		1		1	1	

GOLF COMPARTMENT

173639	Golf compartment door trimmed assembly							1	1	
111671	Golf compartment door bumper							2	2	
111672	Golf compartment door bumper socket							2	2	
163766	Golf compartment door hinge							1	1	
163767	Golf compartment door lock							1	1	
143615	Golf compartment door lock striker							1	1	

GRIP HANDLE

180154	Grip handle (used on 473-4-5-6-7)		2	2	2	2	2			
178497	Grip handle (used on 463-4-5-6-7)	2		2	2	2	2			

HASSOCK

135807	Hassock (used on 466)					2				
174216	Hassock (used on 476)					2				
185407	Hassock									2

INSTRUMENT BOARD

180640	Instrument board assembly	1	1	1	1	1	1	1	1	1
184698	Instrument board compartment door frame assembly—right	1	1	1	1	1	1	1	1	1
184699	Instrument board compartment door frame assembly—left	1	1	1	1	1	1	1	1	1
5724	Screw (No. 8 32 x $\frac{3}{8}$" oval hd.)	4	4	4	4	4	4	4	4	4
5860	Lockwasher (No. 8)	4	4	4	4	4	4	4	4	4
174723	Instrument board compartment door bumper	2	2	2	2	2	2	2	2	2
180307	Instrument board compartment door hinge assembly	2	2	2	2	2	2	2	2	2
141649	Instrument board compartment door hinge rivet ($\frac{1}{16}$ x $\frac{1}{4}$" tub. rnd. hd.)	4	4	4	4	4	4	4	4	4
180635	Instrument board compartment door knob (used on 473-4-5-6-7-8-9)		2	2	2	2	2	2	2	2
178440	Instrument board compartment door knob (used on 463-4-5-6-7-8-9)	2		2	2	2	2	2	2	2
5569	Screw (No. 10 32 x $\frac{1}{2}$" fill. hd. mach.)	2	2	2	2	2	2	2	2	2
5500	Lockwasher No. 10	2	2	2	2	2	2	2	2	2
184753	Instrument board compartment door panel assembly right (walnut finish)	1	1	1	1	1	1	1	1	1
184754	Instrument board compartment door panel assembly—left (walnut finish)	1	1	1	1	1	1	1	1	1
105029	Instrument board compartment door spring dowel	2	2	2	2	2	2	2	2	2

packardinfo.com

Piece No.	Name	Number Required 463	473	474 464	475 465	476 466	477 467	478 468	479 469	483 493
180301	Instrument board compartment door striker plate	2	2	2	2	2	2	2	2	2
141649	Rivet ($\frac{3}{16}$ x $\frac{1}{4}$" rnd. hd. tubular)	4	4	4	4	4	4	4	4	4
182323	Instrument board steering post bracket support	1	1	1	1	1	1	1	1	1
5701	Screw ($\frac{1}{4}$ - 28 x $\frac{5}{16}$" flat hd.)	2	2	2	2	2	2	2	2	2
5574	Screw ($\frac{1}{4}$ - 28 x $\frac{7}{8}$" flat hd.)	2	2	2	2	2	2	2	2	2
3868	Washer ($\frac{1}{4}$" plain)	2	2	2	2	2	2	2	2	2
5502	Lockwasher ($\frac{1}{4}$")	4	4	4	4	4	4	4	4	4
7004	Nut ($\frac{1}{4}$" - 28 plain)	4	4	4	4	4	4	4	4	4
177295	Instrument board steering post bracket support liner	1	1	1	1	1	1	1	1	1

MATS

180095	Floor mat rear (used on 473)		1							
178872	Floor mat rear (used on 474-5)			1	1					
180096	Floor mat rear (used on 476)					1				
180097	Floor mat rear (used on 477)						1			

MOULDINGS

174225	Moulding cowl rail finishing								1	1
169680	Moulding cowl rail finishing (used on 463-4-5-6-7-8)	1		1	1	1	1	1		
172252	Moulding cowl rail finishing (used on 473-4-5-6-7-8)		1	1	1	1	1	1		
173634	Moulding door window finishing right (used on 468)							1		
174138	Moulding door window finishing right								1	
169704	Moulding door window finishing front right (used on 463-4-5-6-7)	1		1	1	1	1			
181312	Moulding door window finishing front right									1
174139	Moulding door window finishing left								1	
173635	Moulding door window finishing left (used on 468)							1		
169705	Moulding door window finishing front left (used on 463-4-5-6-7)	1		1	1	1	1			
181313	Moulding door window finishing front left									1
178915	Moulding door window finishing front upper right (used on 474-5)			1	1					
178933	Moulding door window finishing front upper left (used on 474-5)			1	1					
178914	Moulding door window finishing front lower right (used on 474-5)			1	1					
181112	Moulding door window finishing front lower right (used on 470-6-7-8)					1	1	1		
178931	Moulding door window finishing front lower left (used on 474-5)			1	1					
181113	Moulding door window finishing front lower left (used on 473-6-7-8)		1			1	1	1		
169716	Moulding door window finishing rear right (used on 463-4-5-6)	1		1	1	1				
181314	Moulding door window finishing rear right									1
169717	Moulding door window finishing rear left (used on 463-4-5-6)	1		1	1	1				
181315	Moulding door window finishing rear left									1
178913	Moulding door window finishing rear upper (used on 474-5)			2	2					
178912	Moulding door window finishing rear lower right (used on 474-5)			1	1					
181115	Moulding door window finishing rear lower right (used on 473-476)		1			1				
178932	Moulding door window finishing rear lower left (used on 474-475)			1	1					
181116	Moulding door window finishing rear lower left (used on 473-476)		1			1				
173967	Moulding door window finishing front side front right (used on 473-4-5-6-7-8)		1	1	1	1	1			
173966	Moulding door window finishing front side front left (used on 473-4-5-6-7-8)		1	1	1	1	1			
181118	Moulding door window finishing side (used on 473-4-5-6-7-8)		3	3	3	1	1			
181117	Moulding door window finishing side (used on 473-4-5-6-7-8)		3	3	3	1	1			
181111	Moulding door window finishing front upper left (used on 473-6-7-8)		1			1	1	1		

packardinfo.com

Piece No.	Name	Number Required 463	473	474 464	475 465	476 466	477 467	478 468	479 469	483 493
181110	Moulding door window finishing front upper right (used on 473-6-7-8)		1			1	1	1		
181114	Moulding door window finishing rear upper (used on 473-6)		2			2				
174145	Moulding door window guide								2	
180955	Moulding door window guide									2
173958	Moulding door window sash guide								2	
181022	Moulding partition window finishing (used on 465)				1					
175085	Moulding partition window finishing center left (used on 465)				1					
175084	Moulding partition window finishing center right (used on 465)				1					
181983	Moulding partition window finishing lower (used on 475)				1					
181984	Moulding partition window finishing side right (used on 475)				1					
181985	Moulding partition window finishing side left (used on 475)				1					
181982	Moulding partition window finishing upper (used on 475)				1					
171020	Moulding rain gutter left (116" long)	1	1							
178291	Moulding rain gutter left (128" long) (used on 474-5)			1	1					
171022	Moulding rain gutter left (123" long) (used on 464-5)			1	1					
173035	Moulding rain gutter left (66" long)							1		
172254	Moulding rain gutter left (97 1/4" long)					1				
173032	Moulding rain gutter left (92 1/2" long)						1			
171021	Moulding rain gutter right (116" long	1	1							
178292	Moulding rain gutter right (128" long) (used on 474-5)			1	1					
173036	Moulding rain gutter right (66" long)							1		
171023	Moulding rain gutter right (123" long) (used on 464-5)			1	1					
173033	Moulding rain gutter right (92 1/2" long)						1			
172255	Moulding rain gutter right (97 1/4" long)					1				
166426	Moulding rear platform (44 1/2" long)		1			1				1
175086	Moulding rear window finishing (used on 463-4-5-6-7)	1		1	1	1	1			
175087	Moulding rear window finishing (used on 468)							1		
173989	Moulding rear window finishing lower (used on 473-4-5-6-7-8)		1	1	1	1	1	1		
175609	Moulding rear window finishing upper (used on 487)							1		
173988	Moulding rear window finishing upper (used on 473-4-5-6-7)		1	1	1	1	1			
169676	Moulding side window finishing right	1								
169723	Moulding side window finishing right (used on 464-5)			1	1					
172230	Moulding side window finishing right (used on 467)						1			
169677	Moulding side window finishing left	1								
169724	Moulding side window finishing left (used on 464-5)			1	1					
172231	Moulding side window finishing left (used on 467)						1			
181119	Moulding side window finishing front right (used on 473-4-5-7)		1	1	1		1			
181120	Moulding side window finishing front left (used on 473-4-5-7)		1	1	1		1			
181129	Moulding side window finishing lower (used on 477)						2			
181122	Moulding side window finishing lower (used on 474-5)			2	2					
181121	Moulding side window finishing lower (used on 473)		2							
181450	Moulding side window finishing panel right (used on 473)		1							
175423	Moulding side window finishing panel right (used on 477)						1			
181452	Moulding side window finishing panel right (used on 474-5)			1	1					
181453	Moulding side window finishing panel left (used on 474-5)			1	1					
175764	Moulding side window finishing panel left (used on 477)						1			
181451	Moulding side window finishing panel left (used on 473)		1							
181123	Moulding side window finishing rear right (used on 473)		1							
181125	Moulding side window finishing rear right (used on 474-5)			1	1					
181127	Moulding side window finishing rear right (used on 427)						1			
181124	Moulding side window finishing rear left (used on 473)		1							
181128	Moulding side window finishing rear left (used on 477)						1			
181126	Moulding side window finishing rear left (used on 474-5)			1	1					

PANELS

182158	Panel cowl assembly	1	1	1	1	1	1	1	1	1
182159	Panel dash assembly	1	1	1	1	1	1	1	1	
173456	Panel door right assembly							1		
173458	Panel door right assembly								1	

packardinfo.com

Piece No.	Name	Number Required 463	473	474 464	475 465	476 466	477 467	478 468	479 469	483 493
173457	Panel door left assembly							1		
173459	Panel door left assembly								1	
170299	Panel door front right assembly (used on 463-473-464-465-466-476-467-477)	1	1	1	1	1	1			
178300	Panel door front right assembly (used on 474-5)			1	1					
170300	Panel door front left assembly (used on 463-473-464-465-466-476-467-477)	1	1	1	1	1	1			
178301	Panel door front left assembly (used on 474-5)			1	1					
170317	Panel door rear right assembly					1				
170318	Panel door rear right assembly	1								
170301	Panel door rear right assembly (used on 473-464-5)		1	1	1					
178302	Panel door rear right assembly (used on 474-5)			1	1					
170302	Panel door rear left assembly (used on 473-464-5)		1	1	1					
178303	Panel door rear left assembly (used on 474-5)			1	1					
170320	Panel door rear left assembly	1								
170321	Panel door rear left assembly					1				

PILLAR

185387	Removable pillar finishing plate - lower right	1
185388	Removable pillar finishing plate - lower left	1
185389	Removable pillar hinge assembly - right	1
185390	Removable pillar hinge assembly - left	1
185391	Removable pillar hinge bracket - right	1
185392	Removable pillar hinge bracket - left	1
185393	Removable pillar hinge locking lever	2
185394	Removable pillar hinge rod	2
185395	Removable pillar hinge screw	2
185396	Removable pillar to top side rail dowel plate - right	1
185397	Removable pillar to top side rail dowel plate - left	1
185398	Removable pillar wing nut	2
185399	Rear body pillar finishing plate - right	1
185400	Rear body pillar finishing plate - left	1

REAR COMPARTMENT

173312	Rear compartment door assembly	1
122213	Rear compartment door brace assembly	1
111687	Rear compartment door bumper	2
172133	Rear compartment door drain gutter assembly	1
158994	Rear compartment door hinge	2
102590	Rear compartment light bulb 7V. 3CP G-6 single contact	1
107654	Rear compartment light disconnector plug socket	1
136593	Rear compartment light switch (2 point)	1
176282	Rear compartment door lock	1
181495	Rear compartment door lock handle (with key lock) (used on 467)	1
176207	Rear compartment door lock handle (with key lock) (used on 477)	1
8018	Screw (No. 8 32 x $\frac{7}{16}$" O. H.)	1
184249	Washer	1
5581	Lockwasher (No. 8)	1
176307	Rear compartment door lock striker	1

REAR QUARTER LIGHT

180158	Rear quarter light (used on 473-4-5-6-8)	2	2	2	2	2	2		
106214	Rear quarter light bracket (used on 473-4-5-6-7-8)	2	2	2	2	2	2		
102590	Rear quarter light bulb (7V. 3CP G-6 single contact) (used on 473-4-5-6-7-8)	2	2	2	2	2	2		
180639	Rear quarter light glass and rim (used on 473-4-5-6-7-8)	2	2	2	2	2	2		
180638	Rear quarter light reflector (used on 473-4-5-6-7-8)	2	2	2	2	2	2		
180283	Rear quarter light switch (used on 473-4-5-6-7-8)	1	1	1	1	1	1		

packardinfo.com

REAR VIEW MIRROR

Piece No.	Name	Number Required 463	473	474 464	475 465	476 466	477 467	478 468	479 469	483 493
179526	Rear view mirror assembly	1	1	1	1	1	1	1		
176816	Rear view mirror assembly								1	1
5631	Screw (No. 10 32 x 1/4" rnd. hd.)								2	2
179527	Rear view mirror bracket assembly	1	1	1	1	1	1	1		
191367	Rear view mirror glass	1	1	1	1	1	1	1		
191368	Rear view mirror glass									1

ROBE RAIL

180653	Robe rail assembly (used on 463-4-6)	1		1		1				
180157	Robe rail assembly (used on 473-4-5-6)		1	1	1	1				
178501	Robe rail assembly (used on 465)		1	1	1	1				
180963	Robe rail assembly									1

RUMBLE SEAT

157018	Rumble seat compartment door bumper							2	2	
173129	Rumble seat compartment door hinge right							1	1	
173130	Rumble seat compartment door hinge left							1	1	
7604	Bolt (1/4" 28 x 1 5/8" carriage common)							6	6	
7004	Nut (1/4"—28 plain)							6	6	
5502	Lockwasher (1/4")							6	6	
157583	Rumble seat compartment door operating spring							2	2	
157584	Rumble seat compartment door operating spring bolt							2	2	
7104	Nut (1/4" 28 castle)							2	2	
4280	Cotter pin (1/16 x 1/2")							2	2	
157585	Rumble seat compartment door operating spring washer							2	2	
127501	Rumble seat compartment door hinge bushing							2	2	
127498	Rumble seat compartment door hinge screw							2	2	
3884	Washer (1/2")							2	2	
5510	Lockwasher (1/2")							2	2	
157625	Rumble seat compartment door lock striker							1	1	
173138	Rumble seat compartment drain gutter assembly							1	1	
102590	Rumble seat compartment light bulb (7-V. 3-CP. G-6 single contact)							1	1	
107654	Rumble seat compartment light disconnector plug socket							1	1	
136593	Rumble seat compartment light switch (2 point)							1	1	
148338	Rumble seat door lock							1	1	
148339	Rumble seat door lock operating lever					1	1			
173411	Rumble seat door lock operating rod and yoke end assembly							1	1	
7513	Yoke end adjustable (3/16")							1	1	
7003	Nut (No. 10 plain)							1	1	
7523	Yoke end pin (3/16")							3	3	
3906	Washer (3/16"—plain)							4	4	
4690	Cotter pin (1/16 x 3/8")							3	3	
181728	Rumble seat step—lower (used with rear wheel carrier) (used on 478-9)							1	1	
181710	Rumble seat step—lower (used with side wheel carrier) (used on 478-9)							1	1	
176674	Rumble seat step—lower (used with side wheel carrier) (used on 468-9)							1	1	
175145	Rumble seat step—lower (used with rear wheel carrier) (used on 468-9)							1	1	
175144	Rumble seat step—lower clamp plate (used with rear wheel carrier)							2	2	
175144	Rumble seat step—lower clamp plate (used with side wheel carrier)							1	1	
7859	Screw (1/4 28 x 1 1/2" hex. hd. mach.)							3	3	
5434	Screw (1/4 28 x 1 5/8" hex. hd. mach.)							1	1	
7842	Screw (1/4—28 x 1 1/4" hex. hd. mach.)							2	2	

packardinfo.com

Piece No.	Name	Number Required 463	473	474 464	475 465	476 466	477 467	478 468	479 469	483 493
5502	Lockwasher ($^{1}/_{4}$")							6	6	
7004	Nut ($^{1}/_{4}$" - 28)							10	10	
173644	Rumble seat step upper							1	1	
6116	Stud ($^{3}/_{8}$ x 16 - $^{3}/_{8}$ x 24 x 1 $^{17}/_{32}$")							3	3	
114055	Washer ($^{3}/_{8}$" plain)							3	3	
5506	Lockwasher ($^{3}/_{8}$")							3	3	
7006	Nut ($^{3}/_{8}$" - 24)							3	3	
7861	Screw ($^{5}/_{16}$ - 24 x 1 $^{3}/_{8}$" hex. hd.)							2	2	
117858	Rumble seat step upper bracket							1	1	
7861	Screw ($^{5}/_{16}$ - 24 x 1" hex. hd. mach.)							2	2	
5504	Lockwasher ($^{5}/_{16}$")							2	2	
179123	Rumble seat step upper liner							1	1	

SEAT CUSHIONS AND SPRINGS

170958	Seat back spring—front left	1	1	1		1		1	1	
181966	Seat back spring front				1					
173238	Seat back spring front left						1			
180961	Seat back spring front									1
170753	Seat back spring front right	1	1	1		1		1	1	
185331	Seat back spring front right						1			
181915	Seat back spring rear (used on 463-4-5)	1		1	1					
182428	Seat back spring rear (used on 466)					1				
182430	Seat back spring rear (used on 467)						1			
182438	Seat back spring rear left (used on 477)						1			
181458	Seat back spring rear left (used on 474-5-423)			1	1					
183414	Seat back spring rear left (used on 473)		1							
182436	Seat back spring rear left (used on 476)					1				
181303	Seat back spring rear left									1
183413	Seat back spring rear right (used on 473)		1							
181457	Seat back spring rear right (used on 474-5)			1	1					
182435	Seat back spring rear right (used on 476)					1				
182437	Seat back spring rear right (used on 477)						1			
181316	Seat back spring rear right									1
173640	Seat back spring rumble seat							1	1	
183738	Seat cushion assembly front (used on 475)				1					
181460	Seat cushion assembly front (used on 465)				1					
181753	Seat cushion assembly front left (used on 469)								1	
181754	Seat cushion assembly front left (used on 479)								1	
181751	Seat cushion assembly front left (used on 463-464-466-468)	1		1		1		1		
182186	Seat cushion assembly front left (used on 467)						1			
182187	Seat cushion assembly front left (used on 477)						1			
181752	Seat cushion assembly front left (used on 473-474-476-478)		1	1		1		1		
181757	Seat cushion assembly front right (used on 469)								1	
181758	Seat cushion assembly front right (used on 479)								1	
181755	Seat cushion assembly front right (used on 463-464-466-468)	1		1		1		1		
182188	Seat cushion assembly front right (used on 467)						1			
182189	Seat cushion assembly front right (used on 477)						1			
181756	Seat cushion assembly front right (used on 473-474-476-478)		1	1		1		1		
181717	Seat cushion assembly rear (used on 463-464-465)	1		1	1					
181718	Seat cushion assembly rear (used on 474-475)			1	1					
182194	Seat cushion assembly rear (used on 466)					1				
182196	Seat cushion assembly rear (used on 467)						1			
180062	Seat cushion assembly rear (used on 473)		1							
182195	Seat cushion assembly rear (used on 476)					1				
182197	Seat cushion assembly rear (used on 477)						1			
183290	Seat cushion assembly rumble seat							1	1	
181965	Seat cushion spring front				1					
173237	Seat cushion spring front right						1			
181043	Seat cushion spring front right	1	1	1		1		1	1	
181320	Seat cushion spring front right									1

packardinfo.com

Piece No.	Name	Number Required 463	473	474 464	475 465	476 466	477 467	478 468	479 469	483 493
173311	Seat cushion spring front left						1			
181582	Seat cushion spring front left									1
181044	Seat cushion spring front left	1	1	1		1		1	1	
184461	Seat cushion spring rear (used on 474-5)			1	1					
181583	Seat cushion spring rear right									1
182433	Seat cushion spring rear		1							
181456	Seat cushion spring rear (used on 463-4-5)	1		1	1					
182431	Seat cushion spring rear						1			
182429	Seat cushion spring rear					1				
181584	Seat cushion spring rear left									1
172294	Seat cushion spring folding seat			2	2					
173643	Seat cushion spring rumble seat							1	1	

SMOKING CASE

175800	Ash receiver complete (front pillar)	1	1	1	1	1	1	1	1	1
173440	Smoking case ash receiver (used on 474-475-476-477)			2	2	2	2			
137659	Smoking case cigar lighter (Casolite type) (used on 474-475-466-476-477)			1	1	1	1			
145184	Smoking case cigar lighter tip (bayonet lock type) (used on 474-475-466-476-477)			1	1	1	1			
105029	Smoking case compartment spring dowel					1				
173977	Smoking case compartment spring dowel striker					1				

TOP

185364	Top assembly								1	
187025	Top assembly									1
187026	Top bow auxiliary									1
173828	Top bow rear								1	
187027	Top bow rear									1
177844	Top bow strap assembly								2	
187063	Top bow strap assembly									2
183393	Top center bow assembly								1	
187064	Top center bow assembly									1
156540	Top center bow hinge bumper								2	2
187028	Top center bow to roof rail bracket—right									1
187029	Top center bow to roof rail bracket—left									1
177661	Top envelope assembly								1	
187065	Top envelope assembly									1
187030	Top folding pillar finishing plate—outside right									1
187031	Top folding pillar finishing plate—outside left									1
187032	Top folding pillar finishing plate—inside right									1
187033	Top folding pillar finishing plate—inside left									1
187034	Top folding pillar hinge									2
187035	Top folding pillar hinge stud									2
187049	Top prop right									1
187050	Top prop left									1
173600	Top prop								2	
176637	Top rear curtain assembly								1	
163798	Top rear curtain thumb screw								2	
176281	Top rear curtain window								1	
187051	Top rear curtain window frame—outer									1
187052	Top rear curtain window frame—inner									1
187053	Screw (No. 6 x 3/4"—32 flat hd. mach.) (special)									16
185256	Top rear curtain window glass								1	
187054	Top rear curtain window glass									1
187036	Top side rail to folding pillar link									2
156416	Top side rail to folding pillar link screw									4
5502	Top side rail to folding pillar link screw lockwasher									4
187037	Top side rail to folding pillar link bracket—right									1

packardinfo.com

Piece No.	Name	Number Required 463	473	474 464	475 465	476 466	477 467	478 468	479 469	483 493
187038	Top side rail to folding pillar link bracket—left									1
187039	Top side rail to folding pillar hinge link—right									1
187040	Top side rail to folding pillar hinge link—left									1
173603	Top side rail to folding pillar hinge link screw									4
187041	Top side rail to folding pillar hinge link bracket—right									1
187042	Top side rail to folding pillar hinge link bracket—left									1
187043	Top side rail to front header hinge—right									1
187044	Top side rail to front header hinge—left									1
187045	Top side rail to front header hinge bracket—right									1
187046	Top side rail to front header hinge bracket—left									1
187047	Top side rail hinge front assembly—right									1
187048	Top side rail hinge front assembly—left									1
187055	Top side rail hinge—rear right									1
187056	Top side rail hinge—rear left									1
187057	Top side rail hinge rear bracket—right									1
187058	Top side rail hinge rear bracket—left									1
187059	Top side rail hinge rear clamp lever—right									1
187060	Top side rail hinge rear clamp lever—left									1
187061	Top side rail hinge rear clamp wing screw									2
173841	Top side rail hinge link—right								1	
173842	Top side rail hinge link—left								1	
173603	Top side rail hinge link screw								4	
187062	Top side rail hinge pin									6
187066	Nut ($\frac{7}{16}$"—24 acorn)									6
176777	Top to windshield clamp assembly								2	2
176773	Top to windshield clamp catch								2	2
156584	Top to windshield clamp hook and lever assembly								2	
156546	Top to windshield header weatherstrip								1	1

TRUNK PLATFORM

175651	Rear platform trunk bar—center					1				
175652	Rear platform trunk bar—intermediate					2				
175654	Rear platform trunk bar—outside right					1				
175653	Rear platform trunk bar—outside left					1				

VANITY CASE

(Also see Arm Rest Vanity Case)

173440	Vanity case ash receiver					2				
157320	Vanity case clock (Waltham) (used on 474-5-7)			1	1		1			
162370	Vanity case clock (Jaeger) (used on 474-5-7)			1	1		1			
172103	Vanity case clock escutcheon (used on 474-5-7)			1	1		1			
172107	Vanity case clock retaining clip assembly (Jaeger) (used on 474-5-7)			1	1		1			
172108	Vanity case clock retaining clip assembly (Waltham) (used on 474-5-7)			1	1		1			
173977	Vanity case compartment spring dowel striker					1				
172205	Vanity case hand mirror (used on 474-475-466-476-477)			1	1	1	1			
172204	Vanity case memorandum book (used on 474-475-466-476-477)			1	1	1	1			
140942	Vanity case memorandum book pencil (used on 474-475-466-476-477)			1	1	1	1			

VENTILATOR

170309	Ventilator cover and deflector assembly	1	1	1	1	1	1	1	1	1
137537	Ventilator cover hinge screw	2	2	2	2	2	2	2	2	2
3868	Washer ($\frac{1}{4}$" plain)	2	2	2	2	2	2	2	2	2
7104	Nut ($\frac{1}{4}$"—28 castle)	2	2	2	2	2	2	2	2	2
4280	Pin ($\frac{1}{16}$ x $\frac{1}{2}$" cotter)	2	2	2	2	2	2	2	2	2
167265	Ventilator cover operating lever	1	1	1	1	1	1	1	1	1
7800	Screw ($\frac{1}{4}$—27 x 1" hex. hd. mach.)	2	2	2	2	2	2	2	2	2

packardinfo.com

Piece No.	Name	Number Required 463	473	474 464	475 465	476 466	477 467	478 468	479 469	483 493
5502	Lockwasher (1/4")	2	2	2	2	2	2	2	2	2
7004	Nut (1/4" 28 plain)	2	2	2	2	2	2	2	2	2
118555	Ventilator cover operating lever pin	1	1	1	1	1	1	1	1	1
118771	Ventilator cover operating pin roller	1	1	1	1	1	1	1	1	1
4280	Pin (1/16 x 1/2" cotter)	1	1	1	1	1	1	1	1	1
132671	Ventilator cover operating lever ratchet	1	1	1	1	1	1	1	1	1
5792	Ventilator cover operating lever ratchet yoke end pin	1	1	1	1	1	1	1	1	1
4290	Pin (3/32 x 5/8" cotter)	1	1	1	1	1	1	1	1	1
138261	Ventilator cover spring	1	1	1	1	1	1	1	1	1
145383	Ventilator hinge adjusting plate assembly—left	1	1	1	1	1	1	1	1	1
145384	Ventilator hinge adjusting plate assembly—right	1	1	1	1	1	1	1	1	1
175247	Ventilator weatherstrip	1	1	1	1	1	1	1	1	1

VISOR

179081	Sun visor panel trimmed assembly - right	1	1	1	1	1	1	1		
179082	Sun visor panel trimmed assembly - left	1	1	1	1	1	1	1		
179077	Sun visor hinge	2	2	2	2	2	2	2		

WINDOW

178949	Window anti-rattle bumper	4	4	4	4	4	2	2	6	12
160126	Window curtain rear assembly (used on 463-4-5-6-7-8)	1		1	1	1	1	1		
173535	Window curtain rear assembly (used on 473-4-5-6-7-8)		1	1	1	1	1	1		
185276	Window curtain roller - rear assembly	1	1	1	1	1	1	1		
185277	Window curtain roller - side assembly (used on 463-413)	2								
185278	Window curtain roller - side assembly (used on 473)		2							
185279	Window curtain roller - side assembly (used on 477)						2			
185280	Window curtain roller - side assembly (used on 474-475-467)			2	2		2			
185281	Window curtain roller - side assembly (used on 464-465)			2	2					
29790	Window curtain guide cord	x	x	x	x	x	x	x		
110310	Window curtain screw eye	6	6	6	6	2	6	2		
182434	Window curtain stick	3	3	3	3	1	3	1		
173514	Window curtain tassel (used on 473-4-5-6-7-8)		3	3	3	1	3	1		
170966	Window curtain tassel (used on 463-4-5-6-7-8)	3		3	3	1	3	1		
173999	Window frame door glass channel assembly - right								1	
187022	Window frame door glass channel assembly - front right									1
173998	Window frame door glass channel assembly - left								1	
187023	Window frame door glass channel assembly - front left									1
187024	Window frame door glass channel assembly - rear									2
143554	Window glass cushion	x	x	x	x	x	x	x		
176308	Window glass cushion								x	x
179606	Window glass cushion - rear	1	1	1	1	1	1			
162217	Window glass partition bumper				2					
51331	Window glass packing	x	x	x	x	x	x	x	x	x
183276	Window lifter assembly door - right								1	
183276	Window lifter assembly door - front right									1
183277	Window lifter assembly door - left								1	
183277	Window lifter assembly door - front left									1
176787	Window lifter bumper	x	x	x	x	x	x	x	x	x
169746	Window lifter door front - right assembly (used on 463-4-5-6-7-8-473-6-7-8)	1	1	1	1	1	1	1		
178790	Window lifter door front - right assembly (used on 474-5)			1	1					
169747	Window lifter door front - left assembly (used on 463-4-5-6-7-8-473-6-7-8)	1	1	1	1	1	1	1		
178789	Window lifter door front - left assembly (used on 474-5)			1	1					
170296	Window lifter door rear - right assembly (used on 463-4-5-6-473-6)	1	1	1	1	1				
187020	Window lifter door rear - right assembly									1
178796	Window lifter door rear - right assembly (used on 474-5)			1	1					
170297	Window lifter door rear - left assembly (used on 463-4-5-6-473-6)	1	1	1	1	1				

packardinfo.com

Piece No.	Name	Number Required								
		463	473	464 464	465 465	466	467	468	469	484
167021	Window lifter door rear left assembly									1
178797	Window lifter door rear left assembly (used on 474-5)			1	1					
179619	Window lifter partition assembly (used on 465)				1					
181759	Window lifter partition assembly (used on 475)				1					
173415	Window lifter rear assembly							1		
183258	Window lifter regulator roller guide left								2	
183257	Window lifter regulator roller guide right								2	
169734	Window lifter side right assembly	1	1							
169661	Window lifter side right assembly			1	1					
172147	Window lifter side right assembly						1			
169735	Window lifter side left assembly	1	1							
169662	Window lifter side left assembly			1	1					
172146	Window lifter side left assembly						1			
182406	Window regulator door front right (used on 474-5)			1	1					
169359	Window regulator door front right (used on 463-4-5-6-7-8-473-6-7-8)	1	1	1	1	1	1	1		
183172	Window regulator door right								1	2
182407	Window regulator door front left (used on 474-5)			1	1					
169360	Window regulator door front left (used on 463-4-5-6-7-8-473-6-7-8)	1	1	1	1	1	1	1		
183173	Window regulator door left								1	2
180719	Window regulator door rear right	1	1	1	1	1				
180718	Window regulator door rear left	1	1	1	1	1				
180327	Window regulator handle short (used on 463-4-5-7)	2		2	2		2			
180151	Window regulator handle long (used on 473-4-5-6-7-8)		4	4	4	4	2	2		
180293	Window regulator handle short (used on 473-4-5) (ivory knob)		2	2	3					
180150	Window regulator handle short (used on 477)						2			
173499	Window regulator handle long (used on 463-4-5-6-7-8-9-478-9)	4		4	5	4	2	3	2	4
180152	Window regulator handle escutcheon plate (used on 473-4-5-6-7-8)		4	4	4	4	2	2		
180294	Window regulator handle escutcheon plate (used on 473-4-5)		2	2	2					
180300	Window regulator handle escutcheon plate (used on 477)						2			
182383	Window regulator handle escutcheon plate (used on 475)				1					
173537	Window regulator handle escutcheon plate (used on 463-4-5-6-7-8-9 478-9)	6		6	7	4	4	3	2	4
133264	Window regulator handle escutcheon plate spring	6	4	6	7	4	4	3	2	4
132972	Window regulator handle pin (used on 463-4-5-6-7-8-9-478-9)	6		6	7	4	4	3	2	4
180153	Window regulator handle pin (used on 473-4-5-6-7-8)		4	4	4	4	4			
180295	Window regulator handle screw (used on 473-4-5)		2	2	3					
171861	Window regulator partition (used on 465)				1					
182382	Window regulator partition (used on 475)				1					
169358	Window regulator rear							1		
169357	Window regulator side right (used on 463)	1								
180674	Window regulator side right (used on 473)		1							
169355	Window regulator side right (used on 467)						1			
180306	Window regulator side right (used on 474-475)			1	1					
180676	Window regulator side right (used on 477)						1			
174520	Window regulator side right (used on 464-465)			1	1					
169358	Window regulator side left (used on 463)	1								
180675	Window regulator side left (used on 473)		1							
180305	Window regulator side left (used on 474-475)			1	1					
174519	Window regulator side left (used on 464-465)			1	1					
169356	Window regulator side left (used on 467)						1			
180677	Window regulator side left (used on 477)						1			

WINDOW GLASS (NON-SHATTER)

174140	Window glass door								2	
169736	Window glass door							2		
169736	Window glass door front (used on 463-473-464-465-466-476-467-477)	2	2	2	2	2	2			
181167	Window glass door front									2

Piece No	Name	Number Required 463	473	474 464	475 465	476 466	477 467	478 468	479 469	483 493
178862	Window glass door front (used on 474-475)			2	2					
169737	Window glass door rear (used on 463-473-464-465-466-476)	2	2	2	2	2				
178867	Window glass door rear (used on 474-475)			2	2					
181170	Window glass door rear									2
171011	Window glass partition center (used on 465)				1					
181537	Window glass partition (used on 475)				1					
181023	Window glass partition side right (used on 465)				1					
181024	Window glass partition side left (used on 465)				1					
169995	Window glass rear	1	1	1	1	1	1			
172284	Window glass rear							1		
169730	Window glass side	2	2							
169738	Window glass side			2	2					
172127	Window glass side						2			

WINDSHIELD AND WINDSHIELD CLEANER

180687	Windshield assembly (black enamel)	1	1	1	1	1	1	1		
180688	Windshield assembly (lacquer) (used on 463-4-5-6-7-8)	1		1	1	1	1	1		
180960	Windshield assembly									1
173470	Windshield assembly								1	
5311	Windshield to body scerw (No. 8- 32 x $\frac{5}{16}$" oval hd. mach.)								24	24
182424	Windshield cleaner to dash connecting tube assembly	1	1	1	1	1	1	1	1	1
157477	Windshield cleaner to dash connecting tube union nut	1	1	1	1	1	1	1	1	1
177840	Windshield cleaner to dash connecting tube clip- single	1	1	1	1	1	1	1	1	1
5569	Screw (No. 10 32 x $\frac{1}{2}$" fill. hd.)	1	1	1	1	1	1	1	1	1
5500	Lockwasher (No. 10)	1	1	1	1	1	1	1	1	1
7003	Nut (No. 10 32 plain)	1	1	1	1	1	1	1	1	1
177848	Windshield cleaner hose $\frac{3}{8}$" O. D. tubing	1	1	1	1	1	1	1	2	2
181968	Windshield cleaner hose $\frac{3}{8}$" O. D. tubing	1	1	1	1	1	1	1		
185141	Windshield cleaner hose $\frac{3}{8}$" O. D. tubing	1	1	1	1	1	1	1		
181733	Windshield cleaner motor complete	1	1	1	1	1	1	1		
177850	Windshield cleaner motor complete								1	1
146884	Windshield cleaner motor attaching screw								2	2
182498	Windshield cleaner motor operating key assembly	1	1	1	1	1	1	1		
180060	Windshield cleaner motor operating key escutcheon plate	1	1	1	1	1	1	1		
179708	Windshield cleaner motor shaft washer								1	1
146883	Windshield cleaner motor spacer								2	2
182499	Windshield cleaner operating key lever	1	1	1	1	1	1	1		
180061	Windshield cleaner operating key lever screw	1	1	1	1	1	1	1		
146850	Windshield cleaner wiper—complete								1	1
181734	Windshield cleaner wiper	2	2	2	2	2	2	2		
185569	Windshield cleaner wiper								1	1
181735	Windshield cleaner wiper arm- right	1	1	1	1	1	1	1		
181736	Windshield cleaner wiper arm- left	1	1	1	1	1	1	1		
185328	Windshield cleaner wiper arm								1	1
146887	Windshield cleaner wiper arm screw								1	1
146888	Windshield cleaner wiper arm pressure clip								1	1
169684	Windshield cowl weatherstrip	1	1	1	1	1	1	1	1	1
5475	Screw (No. 4 40 x $\frac{5}{16}$" flat hd.)	2	2	2	2	2	2	2	2	2
33170	Screw ferrule (No. 4)	2	2	2	2	2	2	2	2	2
176673	Windshield glass	1	1	1	1	1	1	1		
176291	Windshield glass								1	
180961	Windshield glass									1
185431	Windshield sash glass retainer assembly upper	1	1	1	1	1	1	1		
178676	Windshield sash glass retainer assembly lower	1	1	1	1	1	1	1		
173471	Windshield sash glass retainer weatherstrip								1	1
169673	Windshield sash glass retainer weatherstrip	1	1	1	1	1	1	1		
173441	Windshield sash sector								2	2
148606	Windshield sash sector	2	2	2	2	2	2	2		
173534	Windshield sash sector screw								2	2
162328	Windshield sash sector screw	2	2	2	2	2	2	2		

packardinfo.com

Piece No.	Name	Number Required 463	473	474 464	475 465	476 466	477 467	478 468	479 469	483 493
162326	Windshield sash sector bracket—right assembly	1	1	1	1	1	1	1		
173532	Windshield sash sector bracket—right assembly								1	1
162325	Windshield sash sector bracket—left assembly	1	1	1	1	1	1	1		
173533	Windshield sash sector bracket—left assembly								1	1
184950	Windshield sash sector bracket spring	2	2	2	2	2	2	2		
185017	Windshield sash sector bracket spring								2	2
8030	Windshield sash sector bracket screw (No. 10—32 x 1/2" oval hd. mach.)	4	4	4	4	4	4	4		
5497	Screw (No. 10—32 x 1/2" oval hd. mach.)								4	4
5491	Lockwasher (3/16")	4	4	4	4	4	4	4	4	4
166451	Windshield sash sector clamp nut								2	2
148603	Windshield sash sector clamp nut	2	2	2	2	2	2	2		
5359	Washer (5/16" plain—special)	2	2	2	2	2	2	2	2	2

TRIMMING

179414	Binding—1 1/8" bias cut imitation colonial leather	x	x	x	x	x	x	x	x	
139910	Binding cloth wire-on	x	x	x	x	x	x	x		
180051	Binding cloth wire-on (cordless) (used on 463-4-5-6-7-8)	x		x	x	x	x	x		
167438	Binding cloth wire-on (cordless)			x	x					
156596	Binding lace (7/16" wide) (used on 463-4-5-6-7)	x		x	x	x	x			
182629	Binding lace (3/8" wide) (used on 463-4-5-6-7-8)	x		x	x	x	x	x		
156689	Binding—1 1/8" leather colonial grain (used on 473-4-5-6-468-478-469-479)		x	x	x	x	x	x	x	
156691	Binding—1 1/8" leather imitation colonial grain	x	x	x	x	x	x	x	x	
176578	Binding—leather wire-on (used on 475-8-9)				x			x	x	
156690	Binding—leather imitation colonial grain (DRC) (used on 463-4-5-6-7-8-9)	x		x	x	x	x	x	x	
29619	Buckram—cotton back (used on 463-4-5-6-7-473-477)	x	x	x	x	x	x			
29618	Buckram—2 ply—38" wide								x	x
29595	Burlap (10-oz. 40" wide) (used on 464-5-473-4-5-6-7)		x	x	x	x	x			
113980	Carpet—woolen (36" wide) (used on 463-4-5-6-7-8)	x		x	x	x	x	x		
166901	Carpet—hair						x	x	x	
103840	Carpet—horse hair (36" wide)									x
29651	Cloth—cotton (36" wide)	x	x	x	x	x	x	x	x	
185467	Cord (5/64" manila)	x	x	x	x	x	x			
182894	Cord twisted paper (1/4") (used on 473-4-5-6-7-8-9)		x	x	x	x	x	x	x	
179401	Cord welt—enameled drill (used on 463-4-5-6-7-8)	x		x	x	x	x	x		
182959	Cord welt—enameled drill (1/4 x 13/16") (used on 473-4-5-6-7)		x	x	x	x	x			
159187	Cord welt (3/4 x 1/4" colonial leather)							x	x	
156696	Cord welt (11/16 x 3/16" leather colonial grain) (used on 479)								x	
182627	Cord welt (21/32 x 5/16" leather colonial grain) (used on 463-4-5-6-7-8-475)	x		x	x	x	x	x		
127253	Cord welt—seaming lace (9/32 x 5/8") (used on 473-4-5-6-7-8)		x	x	x	x	x	x		
173243	Cord welt—seaming lace (11/16 x 3/16")	x	x	x	x	x	x	x		
182628	Cord welt—seaming lace (3/8 x 3/4") (used on 463-4-5)	x		x	x					
161787	Drill—white cotton (7-oz.) 36" wide	x	x	x	x	x	x	x	x	
105025	Drill—enameled, 50" wide—long grain	x	x	x	x	x	x	x	x	x
169249	Drill—sized plain, 36" wide (used on 463-473-4-5-466-476-7-8-9)	x	x	x	x	x	x	x	x	
105024	Enameled muslin, 36" wide (used on 473-4-6-7-8)		x	x		x	x	x		
157364	Fabric—cork faced (1/2 x 1 1/2" liner)	x	x	x	x	x	x	x	x	x
145559	Fabric—plush mohair, 54" wide (used on 473-4-5-6-7-8)		x	x	x	x	x	x		
113981	Fabric (58") upholstering No. 856 (used on 463-4-5-6-7-8)	x	x	x	x	x	x	x		
185211	Fabric (58") upholstering No. 856 (used on 473-4-5-6-7-8)		x	x	x	x	x	x		
142820	Fabric—top material, 54" wide (Burbank 0-2 drab)								x	x
115026	Fabric (60") upholstering head lining	x	x	x	x	x	x	x		
174196	Fabric (57") head lining (used on 463-4-5-6-7-8)	x		x	x	x	x	x		
174513	Fabric (54") filled mole skin	x	x	x	x	x	x	x	x	
156541	Fabric roof covering (Duratex) two-ply aqua-proof quantity grain deck—A, 45" wide	x	x	x	x	x	x	x		
157633	Fabric side curtain (Burbank) (0-2 drab)								x	x

packardinfo.com

Piece No.	Name	Number Required								
		463	473	474 464	475 465	476 466	477 467	478 468	479 469	483 473
156692	Gimp (1/2") imitation black colonial leather	x	x	x	x	x	x	x	x	
156857	Gimp (1/4") imitation colonial leather (used on 469)								x	
175234	Gimp (3/4") leather colonial grain (used on 479)								x	
174201	Gimp (1/2") leather imitation colonial grain)	x	x	x	x	x	x	x	x	
163380	Hair pad, 36" wide (1/4 all cow hair pad, burlap center)	x	x	x	x	x	x	x	x	
163172	Kersey felt, 45" wide	x	x	x	x	x	x	x	x	
127260	Lace pasting (used on 464-5-473-4-5-6-7)		x	x	x	x	x			
159984	Leather imitation black patent leather finish	x	x	x	x	x	x	x		
123507	Leather imitation (Textileather Company No. 95153 color .090 or its equivalent)							x	x	
156346	Leather imitation colonial grain	x	x	x	x	x	x	x	x	
156348	Leather trimming (colonial grain)				x			x	x	
156347	Leather binding colonial grain	x	x	x	x	x	x			
140935	Paper board (1/2 x 48")	x	x	x	x	x	x	x	x	
167422	Rubber riser (5/16" half round)	x	x	x	x	x	x	x		
115023	Rubber riser (3/4" half oval)	x			x	x				x
29334	Silesia brown, 36" wide	x	x	x	x	x	x	x		
113983	Silk curtain, 22" wide (used on 473-4-5-6-7-8)		x	x	x	x	x	x		
174743	Silk curtain, 22" wide (used on 463-4-5-6-7-8)	x		x	x	x	x	x		
29652	Tacks japanned lace (2-oz.)	x	x	x	x	x	x	x		
106964	Tacks gimp japanned (3-oz.)	x	x	x	x	x	x	x	x	
113812	Tacks gimp, japanned (4-oz.)	x	x	x	x	x	x	x	x	
29657	Tacks japanned lace (4-oz.)	x	x	x	x	x	x	x	x	
128467	Tacks japanned lace (8-oz.)							x	x	
178961	Tacks japanned lace (10-oz.)						x			
29662	Tacks trimmers (1 1/2-oz.) japanned	x	x	x	x	x	x	x	x	
29663	Tacks trimmers (2 1/2-oz.) jappaned	x	x	x	x	x	x	x	x	x
29664	Tacks trimmers (4-oz.) japanned	x	x	x	x	x	x	x	x	x
29666	Tacks trimmers (10-oz.) japanned	x	x	x	x	x	x	x	x	x
113789	Tacks gimp (6-oz.) japanned	x	x	x	x	x	x	x	x	
29637	Thread No. EE spool silk	x	x	x	x	x	x	x	x	
166550	Thread No. 70 hard finish cotton	x								
29638	Thread "A" spool silk	x	x	x	x	x	x	x	x	
156681	Thread "D" spool silk	x	x	x	x	x	x	x	x	
29640	Thread "EE" No. 18 or Dean and Sherk No. 12-4	x	x	x	x	x	x	x	x	
127808	Thread No. 20 4 silk finish Dean and Sherk	x	x	x	x	x	x	x		
167433	Thread 3-36 silk finish cotton	x	x	x	x	x	x	x	x	
167434	Thread 3-60 silk finish cotton	x	x	x	x	x	x	x	x	
157022	Thread Lincoln No. 6	x	x	x	x	x	x	x	x	
157586	Thread No. 1201 cord	x	x	x	x	x	x	x	x	
29625	Twine No. 252 Yazoo	x	x	x	x	x	x	x	x	x
45754	Velvet black (36" wide)								x	
29627	Wadding 33" blue sheet No. 532	x	x	x	x	x	x	x	x	x
183741	Wadding roof 41" wide	x	x	x	x	x	x	x		
182687	Wadding 32" white unbleached No. 532	x	x	x	x	x	x	x	x	
172470	Wadding 4' white cotton (unbleached rolled 5-oz.) (used on 403-4-5-6-7-8-9-415)	x	x	x	x	x	x	x	x	
128040	Wadding 33" white sheet	x	x	x	x	x	x	x	x	
139457	Wadding 5" white cotton (unbleached rolled 7 1/2-oz.) (used on 473-6-7-469-479-468-478)		x			x	x	x	x	
62759	Webbing, 3" wide jute			x	x		x		x	x
127254	Windlace cloth	x	x	x	x	x	x	x		
185488	Windlace cloth				x					
178962	Windlace colonial leather								x	
176181	Windlace leather colonial grain (used on 463-4-5-6-7-8-9)	x		x	x	x	x	x	x	
148742	Windlace leather colonial grain (used on 465-9-475-9)				x				x	
183174	Windlace leather colonial grain wire-on (used on 473-4-5-6-7-8-9)		x	x	x	x	x	x	x	
159950	Wire screen 16-mesh No. 34 wire, 12" wide						x	x	x	

packardinfo.com

ENCLOSED BODY ATTACHING PARTS

Piece No.	Name	Number Required: 503	513 543	504 514	505 515	506 516	507 517	508 518	509 519	523 533	527 537
187627	Body to frame bolt No. 1 carriage bolt ($\frac{7}{16}$ 20 x $2\frac{11}{16}$" skew head)	2	2	2	2	2	2	2	2	2	2
5282	Body to frame bolt No. 2—screw ($\frac{7}{16}$ 20 x $3\frac{1}{2}$" hex. hd. mach.)	2	2	2	2	2	2	2	2	2	2
7954	Body to frame bolt No. 3—screw ($\frac{7}{16}$ 20 x $3\frac{1}{4}$" flat hd. mach.)						2				
5282	Body to frame bolt No. 3 screw ($\frac{7}{16}$ 20 x $3\frac{1}{2}$" hex. hd. mach.)										2
5281	Body to frame bolt No. 3—screw ($\frac{7}{16}$ 20 x $3\frac{7}{8}$" hex. hd. mach.)	2	2	2	2	2		2	2	2	
5968	Body to frame bolt No. 4 screw ($\frac{7}{16}$ 20 x 4" flat hd. mach.)	2	2	2	2					2	
7954	Body to frame bolt No. 4—screw ($\frac{7}{16}$ 20 x $3\frac{1}{4}$" hex. hd. mach.)							2	2		
5281	Body to frame bolt No. 4—screw ($\frac{7}{16}$ 20 x $3\frac{7}{8}$" hex. hd. mach.)					2	2				
5282	Body to frame bolt No. 4 screw ($\frac{7}{16}$ 20 x $3\frac{1}{2}$" hex. hd. mach.)										2
5671	Body to frame bolt No. 5—screw ($\frac{7}{16}$ 20 x $5\frac{3}{8}$" hex. hd. mach.)	2	2	2	2		2	2	2	2	
195694	Body to frame bolt No. 5 screw ($\frac{7}{16}$ 20 x $7\frac{11}{16}$" hex. hd. mach.)										2
187285	Body to frame bolt No. 5—carriage bolt ($\frac{7}{16}$ 20 x $\frac{7}{16}$ 20 x $7\frac{3}{16}$" skew head)					2					
182439	Body to frame bolt nut lock	4	4	4	4	2	2	2	2	4	4
131809	Body to frame bolt washer large washer ($\frac{7}{16}$" plain special)	2	2	2	2	4	4	4	4	2	6
131046	Body to frame bolt washer small washer ($\frac{7}{16}$" plain special)	12	12	12	12	10	12	12	12	12	10
5508	Body to frame bolt lockwasher ($\frac{7}{16}$")	8	8	8	8	8	8	8	8	8	6
5806	Body to frame bolt lockwasher (shakeproof)	2	2	2	2	2	2	2	2	2	4
7007	Body to frame bolt nut ($\frac{7}{16}$" 20 plain std.)	8	8	8	8	8	8	8	8	8	10
193883	Body to frame liner ($\frac{3}{16}$" thick)	x	x	x	x	x	x	x	x	x	x
185271	Body to frame liner ($\frac{1}{4}$" thick)	x	x	x	x	x	x	x	x	x	x
185272	Body to frame liner ($\frac{5}{16}$" thick)	x	x	x	x	x	x	x	x	x	x
193930	Body to frame liner ($\frac{3}{16}$" thick)	x		x	x						
193931	Body to frame liner ($\frac{3}{16}$" thick)		x			x	x	x	x	x	x
167924	Body to frame liner hand brake lever insulator	1	1	1	1	1	1	1	1	1	1
185270	Body hold down bolt bracket liner ($\frac{3}{8}$" thick)	x	x	x	x	x	x	x	x	x	x
185274	Body hold down bolt bracket liner ($\frac{1}{2}$" thick)	x	x	x	x	x	x	x	x	x	x
185273	Body hold down bolt bracket liner ($\frac{3}{16}$" thick)	x	x	x	x	x	x	x	x	x	x
133104	Body hold down bolt bracket liner ($\frac{1}{2}$" thick)	x	x	x	x	x	x	x	x	x	x

ARM REST AND ARM SLING

195490	Folding arm rest trimmed assembly (for models 513-4-5-6)		1	1	1	1					
195491	Folding arm rest trimmed assembly (for model 517)						1				
187544	Folding arm rest support bracket assembly (for model 516)					1					
185826	Folding arm rest support bracket assembly (for models 514-15)			1	1						
187221	Folding arm rest support bracket assembly (for models 513-523-533)		1							1	
193133	Folding arm rest support bracket assembly (for models 517-527-537)						1				1
171580	Screw (No. 10 32 x $\frac{5}{8}$" flat hd. mach.) (for models 513-14-15-16-17)		6	6	6	6	6			6	6
7824	Screw ($\frac{1}{4}$ 28 x $\frac{5}{8}$" hex. hd.) (for models 513-14-15-16-17)		4	4	4	4	4			4	4
5502	Lockwasher ($\frac{1}{4}$") (for models 513-14-15-16-17)		4	4	4	4	4			4	4
7004	Nut ($\frac{1}{4}$" 28) (for models 513 14-15-16-17)		4	4	4	4	4			4	4
187144	Arm rest smoking case ash receiver (for models 503-543-504-5-7-523-527)	2	2	2	2		2			2	2
187191	Arm rest smoking case cigar lighter complete (for models 503-543-504-5-7-523-527)	2	2	2	2		2			2	2
36111	Arm rest smoking case cigar lighter feed cable terminal insulator (for models 503-543-504-5-7)	2	2	2	2		2			2	2
176817	Cable terminal ($\frac{3}{16}$" eye) (for models 503-543-504-5-7)	2	2	2	2		2			2	2

packardinfo.com

Piece No.	Name	Number Required 503	513 543	504 514	505 515	506 516	507 517	508 518	509 519	523 533	527 537
171863	Arm rest smoking case cigar lighter ground cable clip (for models 503-543-504-5-7)	2	2	2	2	..	2	..	..	2	2
182377	Arm rest smoking case cigar lighter tip (for models 503-543-504-5-7)	2	2	2	2	..	2	..	..	2	2
187596	Arm rest vanity case mirror (for models 513)	..	1	..	..	..	..	..	..	..	..
172205	Arm rest vanity case mirror (for models 514-15-17)	..	..	1	1	..	1	..	..	..	..
187594	Arm rest vanity case memorandum book (for model 513)	..	1	..	..	..	..	..	..	..	..
172204	Arm rest vanity case memorandum book (for models 514-15-17)	..	..	1	1	..	1	..	..	..	..
140942	Arm rest vanity case memorandum book pencil (for models 514-15-17)	..	..	1	1	..	1	..	..	..	..
180082	Arm rest vanity case memorandum book pencil (for model 513)	..	1	..	..	..	..	..	..	..	..
187826	Arm sling (for models 514-515)	..	..	2	2	..	..	..	..	..	..
171899	Arm sling rod—left (for models 514-15)	..	..	1	1	..	..	..	..	..	..
173490	Arm sling rod—right (for models 514-515)	..	..	1	1	..	..	..	..	..	..

BONNET DASH LINER

139804	Bonnet dash liner (in rolls)	x	x	x	x	x	x	x	x	x	x
187260	Bonnet dash liner hook	2	2	2	2	2	2	2	2	2	2
3866	Washer ($\frac{3}{16}$")	2	2	2	2	2	2	2	2	2	2
7002	Nut (No. 8—32)	2	2	2	2	2	2	2	2	2	2

CABLES

167069	Body wiring cable (19 strand No. 16) (green braid)	x	x	x	x	x	x	x	x	x	x
194219	Body wiring cable (19 strand No. 14) (green braid)	x	x	x	x	x	x	..	..	x	x
166406	Body wiring cable (19 strand No. 16) (red braid)	x	x	x	x	x	x	x	x	x	x
194218	Body wiring cable (19 strand No. 14) (red braid)	x	x	x	x	x	x	..	..	x	x
166404	Body wiring cable (19 strand No. 16) (black braid)	x	x	x	x	x	x	x	x	x	x
166405	Body wiring cable (19 strand No. 16) (black with red tracer braid)	x	x	x	x	x	x	x	..	..	..
29254	Body wiring cable staple—insulated	x	x	x	x	x	x	x	x	x	x
48202	Body wiring cable terminal	x	x	x	x	x	x	x	x	x	x
33287	Body wiring cable terminal	x	x	x	x	x	x	x	x	x	x
36111	Body wiring cable terminal insulator	x	x	x	x	x	x	x	x	x	x

CARPET

179586	Carpet folding seat floor assembly	..	..	2	2	..	..	..	..	..	..
185613	Carpet front assembly (for models 504-5)	..	..	1	1	..	..	..	..	..	..
195950	Carpet front assembly (less starter switch hole)	..	..	1	1	..	..	..	..	..	..
185614	Carpet front assembly (for models 503-543-506-508)	1	1	..	..	1	..	1	..	..	..
195953	Carpet front assembly (less starter switch hole)	1	1	..	..	1	..	1	..	..	..
193264	Carpet front assembly	..	..	..	..	..	..	..	1	..	..
195954	Carpet front assembly (less starter switch hole)	..	..	..	..	..	..	..	1	..	..
193263	Carpet front assembly (for model 507)	..	..	..	..	..	1	..	..	..	..
195955	Carpet front assembly (less starter switch hole)	..	..	..	..	..	1	..	..	..	..
196182	Carpet front assembly (for models 514-15)	..	..	1	1	..	..	..	..	..	..
196183	Carpet front assembly (for models 513-16-18)	..	1	..	..	1	..	1	..	..	..
196184	Carpet front assembly (for model 517)	..	..	..	..	..	1	..	..	..	..
187276	Carpet rear assembly	1	..	..	..	..	..	..	..	..	..
193265	Carpet rear assembly	..	..	..	..	..	1	..	..	..	..
187277	Carpet rear assembly (for models 504-505)	..	..	1	1	..	..	..	..	..	..
187278	Carpet rear assembly (for models 514-515)	..	..	1	1	..	..	..	..	..	..
187595	Carpet rear assembly	..	1	..	..	..	..	..	..	..	..
187612	Carpet rear assembly	..	..	..	..	1	..	..	..	..	..

DICTOGRAPH

147649	Dictograph receiver	..	..	..	1	..	..	..	..	..	..
187610	Dictograph transmitter bracket	..	..	..	1	..	..	..	..	..	..
187609	Dictograph transmitter and winder assembly	..	..	..	1	..	..	..	..	..	..

packardinfo.com

DOME LIGHT

Piece No.	Name	Number Required 503	513 543	504 514	505 515	506 516	507 517	508 518	509 519	523 533	527 537
187300	Dome light (for models 513-14-16-17-18)		1	1		1	1	1			
185898	Dome light (for model 505)				1						
187325	Dome light (for models 503-543-504-506-507-508)	1	1	1		1	1	1			
185888	Dome light (for model 515)				1						
102585	Dome light bulb (Mazda No. 81) 6 CP. G-6	1	1	1	2	1	1	1			
185031	Dome light door switch	2	2	2	2	2	2	2			
187302	Dome light glass and rim (for models 513-514-515-516-517-518)		1	1	1	1	1	1			
187326	Dome light glass and rim (for models 503-5-3-4-5-6-7-8)	1	1	1	1	1	1	1			
180636	Dome light reflector	1	1	1		1	1	1			
185616	Dome light reflector				1						
141645	Dome light switch—front (3 point) (for model 505)				1						
187286	Dome light switch (3 point) (for models 513-14-15-16-17-18)		1	1	2	1	1	1			
187292	Dome light switch (3 point) (for models 503-543-504-506-507-508)	1	1	1		1	1	1			
187292	Dome light switch—rear (3 point) (for model 505)				1						

DOORS

All doors must be adjusted to each respective body. To obtain satisfactory replacement of doors, it is advisable to return the damaged door to be repaired, if possible. If this cannot be done, the customer assumes the responsibility of the new door being a satisfactory fit.

Specify on all orders the upholstery material, color of paint and striping.

packardinfo.com

195450	Door—front left assembly—trimmed (for models 503-543-504-506-507)	1	1	1		1	1				
195451	Door—front left assembly—trimmed (for model 505)				1						
195452	Door—front left assembly—trimmed (for models 513-16-17)		1			1	1				
195453	Door—front left assembly—trimmed (for model 514)			1							
195454	Door—front left assembly—trimmed (for model 515)					1					
195455	Door—left assembly—trimmed (for model 508)							1			
195456	Door—left assembly—trimmed (for model 518)							1			
195457	Door—left assembly—trimmed (for model 509)								1		
195458	Door—left asembly—trimmed (for model 519)								1		
195459	Door—front right assembly—trimmed (for models 503-543-504-506-507)	1	1	1		1	1				
195460	Door—front right assembly—trimmed (for model 505)				1						
195461	Door—front right assembly—trimmed (for models 513-16-17)		1			1	1				
195462	Door—front right assembly—trimmed (for model 514)		1								
195463	Door—front right assembly—trimmed (for model 515)				1						
195464	Door—right assembly—trimmed (for model 509)								1		
195465	Door—right assembly—trimmed (for model 519)								1		
195466	Door—right assembly—trimmed (for model 508)							1			
195467	Door—right assembly—trimmed (for model 518)							1			
195468	Door—rear left assembly—trimmed	1									
195469	Door—rear left assembly—trimmed (for model 506)					1					
195470	Door—rear left assembly—trimmed (for model 516)					1					
195471	Door—rear left assembly—trimmed (for model 513)		1								
195472	Door—rear left assembly—trimmed (for models 543-504-505)		1	1	1						
195473	Door—rear left assembly—trimmed (for models 514-515)			1	1						
195474	Door—rear right assembly—trimmed	1									
195475	Door—rear right assembly—trimmed (for model 506)					1					
195476	Door—rear right assembly—trimmed (for model 516)					1					
195477	Door—rear right assembly—trimmed (for model 513)		1								

Piece No.	Name	Number Required 503	513 543	504 514	505 515	506 516	507 517	508 518	509 519	523 533	527 537
195478	Door rear right assembly trimmed (for models 543-504)		1	1							
195479	Door rear right assembly trimmed (for model 505)				1						
195480	Door rear right assembly trimmed (for model 514)			1							
195481	Door rear right assembly trimmed (for model 515)				1						

DOOR PARTS

187224	Door anti-rattle	4	4	4	4	4	2	2	2	4	2
185601	Door bumper ($1\frac{11}{32}$")	x	x	x	x	x	x	x	x	x	x
185600	Door bumper ($1\frac{13}{32}$")	x	x	x	x	x	x	x	x	x	x
185602	Door bumper ($1\frac{9}{32}$")	x	x	x	x	x	x	x	x	x	x
164679	Door check strap	4	4	4	4	4	2	2			
164700	Door check strap								2	2	2
164359	Door check strap fastener plate	4	4	4	4	4	2	2	2	4	2
167250	Door check strap guide	2	2	2	2	2				2	
164358	Door check strap stop plate	2	2	2	2	2	2	2			
179680	Door check strap stop plate								2	2	2
184659	Door dovetail female	4	4	4	4	4	2	2	2	4	4
119298	Door dovetail male	4	4	4	4	4	2	2	2	4	4
185562	Door hinge front center left	1	1	1	1	1	1	1			
193020	Door hinge front center left								1	1	1
185561	Door hinge front center right	1	1	1	1	1	1	1			
193019	Door hinge front center right								1	1	1
185568	Door hinge front lower left	1	1	1	1	1	1	1			
193105	Door hinge front lower left								1	1	
195751	Door hinge front lower left										1
185567	Door hinge front lower right	1	1	1	1	1	1	1			
193104	Door hinge front lower right								1	1	
195750	Door hinge front lower right										1
193018	Door hinge front upper left								1	1	1
185566	Door hinge front upper left	1	1	1	1	1	1	1			
193017	Door hinge front upper right								1	1	1
185565	Door hinge front upper right	1	1	1	1	1	1	1			
185557	Door hinge rear center right	1	1	1	1	1					
195754	Door hinge rear center right									1	
185558	Door hinge rear center left	1	1	1	1	1					
195755	Door hinge rear center left									1	
185560	Door hinge rear lower right		1	1	1	1					
195804	Door hinge rear lower right									1	
187506	Door hinge rear lower right	1									
187505	Door hinge rear lower left	1									
185559	Door hinge rear lower left		1	1	1	1					
195805	Door hinge rear lower left									1	
185555	Door hinge rear upper right	1	1	1	1	1					
195752	Door hinge rear upper right									1	
185556	Door hinge rear upper left	1	1	1	1	1					
195753	Door hinge rear upper left									1	
5697	Screw ($\frac{1}{4}$ 28 x $\frac{7}{16}$" oval hd. mach.)	14	14	14	14	14	14	14	24		
5699	Screw ($\frac{1}{4}$ 28 x $\frac{11}{32}$" flat hd. mach.)	16	16	16	16	16	16	16			
5854	Screw ($\frac{1}{4}$ 28 x $1\frac{1}{4}$" flat. hd.)	6	6	6	6	6					
5820	Screw ($\frac{1}{4}$ 28 x $1\frac{11}{32}$ oval hd. mach.)	6	6	6	6	6					
8211	Screw ($\frac{1}{4}$ 28 x $2\frac{1}{4}$" flat hd. mach.)								6	6	6
5876	Screw ($\frac{1}{4}$ 28 x $2\frac{9}{16}$" oval hd. mach.)	2	2	2	2	2	2	2			
5701	Screw ($\frac{1}{4}$ 28 x $\frac{9}{16}$" flat hd. mach.)	8	8	8	8	8	8	8			
5899	Lockwasher ($\frac{7}{16}$")	38	38	38	36	36	36	36	24		
185553	Door hinge pin	8	8	8	8	8	4	4			
187763	Door hinge pin								6		
185554	Door hinge pin	4	4	4	4	4	2	2			
195946	Door hinge pin $\frac{11}{16}$" oval hd. ($\frac{1}{32}$" oversize)	x	x	x	x	x	x	x			
195945	Door hinge pin slotted hd. ($\frac{1}{32}$" oversize)	x	x	x	x	x	x	x			
187668	Door hinge pin nut	4	4	4	4	4	2	2			
5500	Door hinge pin lockwasher	4	4	4	4	4	2	2			
183170	Door lock front right	1	1	1	1	1	1	1	1		1

packardinfo.com

Printed in U. S. A.

Piece No.	Name	Number Required 503	513 543	504 514	505 515	506 516	507 517	508 518	509 519	523 533	527 537
193054	Door lock front right									1	
183171	Door lock front left	1	1	1	1	1	1	1	1		1
193021	Door lock front left									1	
183171	Door lock rear right	1	1	1	1	1					
193021	Door lock rear right									1	
183170	Door lock rear left	1	1	1	1	1					
193054	Door lock rear left									1	
5829	Screw (No. 10 32 x $\frac{7}{8}$" flat hd.)	8	8	8	8	8	4	4	4		
5491	Lockwasher ($\frac{3}{16}$")	8	8	8	8	8	4	4	4		
193172	Door lock handle (for models 509-527)								1		1
193695	Door lock handle front left (for model 533)									1	
193175	Door lock handle (with key lock) (for models 509-527)								1		1
193697	Door lock handle front left (for model 523)									1	
185827	Door lock handle front left (for models 503-543-504-5-6-7-8)	1	1	1	1	1	1	1			
193692	Door lock handle front right (for model 533)									1	
185827	Door lock handle rear right (for models 503-543-504-6)	1	1	1		1					
193697	Door lock handle rear right (for model 523)									1	
185737	Door lock handle rear left (for models 503-543-504-5-6)	1	1	1	1	1					
193698	Door lock handle rear left (for model 523)									1	
185732	Door lock handle front right (with key lock) (for models 503-543-504-5-6-7-8)	1	1	1	1	1	1	1			
193694	Door lock handle front right (for model 523)									1	
185733	Door lock handle rear right (with key lock) (for model 505)				1						
193695	Door lock handle rear right (for model 533)									1	
193174	Door lock handle (for models 519-527)								1		1
193177	Door lock handle (with key lock) (for models 519-537)										1
185828	Door lock handle front left (for models 513-14-15-16-17-18)		1	1	1	1	1	1			
185828	Door lock handle rear right (for models 513-14-16)		1	1		1					
185736	Door lock handle rear left (for models 513-14-15-16)		1	1	1	1					
193696	Door lock handle rear left (for model 533)									1	
185734	Door lock handle front right (with key lock) (for models 513-14-15-16-17-18)		1	1	1	1	1	1			
185735	Door lock handle rear right (with key lock) (for model 515)				1						
187685	Door lock handle screw	1	1	1	2	1	1	1	1		1
185236	Washer	1	1	1	2	1	1	1	1		1
193076	Door lock remote control right								1		
185710	Door lock remote control right									2	1
193075	Door lock remote control left								1		
185711	Door lock remote control left									2	1
185701	Door lock remote control front right (for models 503-513-543-504-5-506-16-507-17-508-18)	1	1	1	1	1	1	1			
185697	Door lock remote control front left (for models 503-13-543-504-5-506-16-507-17-508-18)	1	1	1	1	1	1	1			
185713	Door lock remote control front right (for models 514-515)			1	1						
185712	Door lock remote control front left (for models 514-515)			1	1						
185650	Door lock remote control rear right (for models 503-513-543-504-5-506-16)	1	1	1	1	1					
185700	Door lock remote control rear left (for models 503-513-543-504-5-506-16)	1	1	1	1	1					
185710	Door lock remote control rear right (for models 514-15 only)			1	1						
185711	Door lock remote control rear left (for models 514-15)			1	1						
185822	Door lock remote control handle (for models 513-14-15-16-17 18-19-533-537)		4	4	4	4	2	2	4	2	
193167	Door lock remote control handle escutcheon plate (for model 505)				4						
185833	Door lock remote control handle (for models 503-543-504-505 6-7-8-523-527)	4	4	4	4	4	2	2	2	4	2
187985	Door lock remote control handle escutcheon plate (for models 503-543-504-506-507-8-9-523-527)	4	4	4		4	2	2	2	4	2
187984	Door lock remote control handle escutcheon plate (for models 513-514-15-16-17-18-19-533-537)	4	4	4	4	4	2	2	2	4	2

packardmo.com

Piece No.	Name	Number Required 503	513 543	504 514	505 515	506 516	507 517	508 518	509 519	523 533	527 537
193078	Door lock remote control handle escutcheon plate spring (for models 503-43-504-5-6-7-8-9-523-527)	4	4	4	4	4	2	2	2	4	2
193077	Door lock remote control handle escutcheon plate spring (for models 513-514-15-16-17-18-19-533-537)		4	4	4	4	2	2	2	4	2
182386	Door lock striker	4	4	4	4	4					
170689	Door lock striker						2	2			
193165	Door lock striker								2		2
170336	Door lock striker nut	2	2	2	2	2					
182387	Door lock striker adjusting plate	4	4	4	4	4					
170335	Door lock striker screw	2	2	2	2	2					
195781	Door scuff plate—front left (for model 533)								1		
185839	Door scuff plate—front left (for models 503-543-504-5-6-7-8)	1	1	1	1	1	1	1			
195783	Door scuff plate—front left (for model 523)								1		
185715	Door scuff plate—front left (for models 514-515)			1	1						
185585	Door scuff plate—front left (for models 513-516-517-518)		1			1	1	1			
195778	Door scuff plate—right (for model 537)										1
193102	Door scuff plate—right (for model 509)								1		
195776	Door scuff plate—right (for model 527)										1
193103	Door scuff plate—left (for model 509)								1		
195779	Door scuff plate—left (for model 537)										1
193124	Door scuff plate—right (for model 519)								1		
193123	Door scuff plate—left (for model 519)								1		
195777	Door scuff plate—left (for model 527)										1
185838	Door scuff plate—front right (for models 503-543-504-5-6-7-8)	1	1	1	1	1	1	1			
195780	Door scuff plate—front right (for model 533)									1	
185716	Door scuff plate—front right (for models 514-515)			1	1						
195782	Door scuff plate—front right (for model 523)									1	
185586	Door scuff plate—front right (for models 513-516-517-518)		1			1	1	1			
185837	Door scuff plate—rear left (for models 543-504-5-6)		1	1	1	1					
187648	Door scuff plate—rear left	1									
195787	Door scuff plate—rear left (for model 533)									1	
185646	Door scuff plate—rear left (used for models 513-516)		1			1					
195785	Door scuff plate—rear left (for model 523)									1	
185778	Door scuff plate—rear left (for models 514-515)			1	1						
195784	Door scuff plate—rear right (for model 523)									1	
187647	Door scuff plate—rear right	1									
195786	Door scuff plate—rear right (for model 533)									1	
185779	Door scuff plate—rear right (for models 514-515)			1	1						
185647	Door scuff plate—rear right (for models 513-516)		1			1					
185836	Door scuff plate—rear right (for models 543-504-5-6)		1	1	1	1					
193235	Door weatherstrip—front right								1		
193234	Door weatherstrip—front left								1		
193229	Door weatherstrip—rear right								1		
193535	Door weatherstrip—rear left								1		
193233	Door weatherstrip—upper front right								1		
193232	Door weatherstrip—upper front left								1		
193231	Door weatherstrip—upper rear right								1		
193230	Door weatherstrip—upper rear left								1		

FASTENERS

195348	Fastener eyelet—short prong—door pocket (for models 503-543-504-5-6)	x	x	x	x	x					
193360	Fastener eyelet—short prong—door pocket (for models 503-543-504-5-6)	x	x	x	x	x					
161792	Fastener eyelet plate—door pocket (for models 503-543-504-5-6)	x	x	x	x	x					
195349	Fastener eyelet plate—door pocket (for models 503-4-5-6-543)	x	x	x	x	x					
177609	Fastener plate prong—door pocket (for models 503-543-504-5-6)	x	x	x	x	x					

packardinfo.com

Piece No.	Name	Number Required 503	513 543	504 514	505 515	506 516	507 517	508 518	509 519	523 533	527 537
193357	Fastener single prong door pocket (for models 503-543-504-5-6)	x	x	x	x	x					
195341	Fastener--stud screw base top rear curtain								x		
193199	Snap fastener rivet post--female--carpet	x	x	x	x	x	x	x	x		
193200	Snap fastener machine screw post--carpet	x	x	x	x	x	x	x	x		
193201	Snap fastener screw post--carpet	x	x	x	x	x	x	x	x		
159060	Snap fastener screw stud—carpet	x	x	x	x	x	x	x	x		
115798	Snap fastener socket ring—carpet--short prong	x	x	x	x	x	x	x	x		
115799	Snap fastener socket --carpet	x	x	x	x	x	x	x	x		
185412	Snap fastener wood screw stud front seat back rail								x		
139150	Snap fastener socket --top envelope								x		
139150	Snap fastener socket--top side rail								x		
139150	Snap fastener socket body lock pillar								x		
139157	Snap fastener rivet stud--top side quarter								x		
139157	Snap fastener rivet stud--top envelope								x		
139159	Snap fastener rivet post—top envelope								x		
175757	Snap fastener rivet post—top envelope								x		

FLOOR BOARD

185702	Floor board front assembly	1	1			1		1	1	1	
187943	Floor board front assembly						1				1
185703	Floor board front assembly			1	1						
187946	Floor board front filler						1				1
185705	Floor board front filler			1	1						
185704	Floor board front filler	1	1			1		1	1	1	
195242	Floor board front felt--center	1	1	1	1	1	1	1	1	1	1
187634	Floor board front felt--front center	1	1	1	1	1	1	1	1	1	1
187631	Floor board front felt—front side	2	2	2	2	2	2	2	2	2	2
185709	Floor board front felt—rear	1	1	1	1	1	1	1	1	1	1
187632	Floor board front felt—side	2	2			2		2	2	2	
187633	Floor board front felt--side			2	2						
187949	Floor board front felt--side						2				2
185719	Floor board rear assembly (for models 513-543-514-515)		1	1	1						
187275	Floor board rear assembly (for models 503-504-505)	1		1	1						

FOLDING SEAT

187279	Folding seat trimmed assembly (for models 504-505)			2	2						
187280	Folding seat trimmed assembly (for models 514-515)			2	2						
187498	Folding seat untrimmed assembly (for models 514-515)			2	2						
187527	Folding seat untrimmed assembly (for models 504-505)			2	2						
184451	Folding seat back untrimmed assembly (for models 504-505)			2	2						
169102	Folding seat back untrimmed assembly (for models 514-515)			2	2						
167945	Folding seat back to seat frame screw			4	4						
187417	Folding seat floor plate			1	1						
171692	Folding seat frame assembly (for models 514-515)			2	2						
184458	Folding seat frame assembly (for models 504-505)			2	2						
5580	Screw (No. 10 32 x 1" flat hd. mach.)			16	16						
5229	Screw ($^1/_4$--28 x $1^3/_8$" flat hd. mach.)			8	8						
8220	Screw ($^1/_4$ -28 x $1^1/_2$" flat hd. mach.)			8	8						
7003	Nut (No. 10 -32)			16	16						
7004	Nut ($^1/_4$" -28)			16	16						
3867	Washer ($^1/_{16}$")			4	4						
184455	Folding seat frame side —left (for models 504-505)			2	2						
171698	Folding seat frame side--left (for models 514-515)			2	2						
184454	Folding seat frame side -right (for models 504-505)			2	2						
171703	Folding seat frame side --right (for models 514-515)			2	2						
187774	Folding seat handle			2	2						
100100	Folding seat pivot pin			4	4						

packardinfo.com

Piece No.	Name	Number Required 503	513 543	504 514	505 515	506 516	507 517	508 518	509 519	523 533	527 537
187421	Folding seat pivot pin retainer			2	2						
8204	Screw (1/4-28 x 2" flat hd. mach.)			4	4						
187410	Folding seat support - left (for models 514-515)			2	2						
187414	Folding seat support - left (for models 504-505)			2	2						
187415	Folding seat support - right (for models 504-505)			2	2						
187411	Folding seat support - right (for models 514-515)			2	2						
130869	Folding seat support to seat frame screw			4	4						
7006	Nut (3/8"-24)			4	4						
5506	Lockwasher (3/8")			4	4						

FOOT REST

185861	Foot rest assembly (for models 503-543-504-505)	1	1	1	1						
187113	Foot rest assembly (for models 513-514-515)		1	1	1						
79574	Foot rest assembly							1	1		
122146	Foot rest pivot stud							2	2		
185896	Foot rest pivot stud (for models 503-543-504-505-523)	2	2	2	2					2	
147963	Foot rest pivot stud (for models 513-514-515-533)		2	2	2					2	
180134	Nut	2	2	2	2			2	2		

FRONT SEAT

142793	Front seat back compartment lid hinge							1			
122611	Front seat back compartment lid hinge								2		
114525	Front seat back compartment lid lifter							1			
181695	Front seat (right) counterbalance assembly						1				
5823	Screw (1/4-28 x 1 1/8" oval hd. mach.)						3				
5502	Lockwasher (1/4")						3				
7004	Nut (1/4"-28)						3				
62065	Washer (1/4")						3				
181703	Front seat (right) counterbalance spring - left						1				
181702	Front seat (right) counterbalance spring - right						1				
181989	Front seat (right) counterbalance spring adjusting lever						2				
181697	Front seat (right) counterbalance spring lever and pin assy.						1				
5822	Front seat (right) counterbalance spring adjusting lever screw (1/4-28 x 5/8" hex. hd. mach.)						2				
5502	Lockwasher (1/4")						2				
7004	Nut (1/4"-28)						2				
179717	Front seat (left) frame carrier bracket	1	1	1		1		1			
187738	Front seat (left) frame carrier bracket								1		
4242	Rivet (3/16" x 1/2")	10	10	10		10		10	10		
7610	Front seat hinge bolt (1/4-28 x 2 1/8" common carriage)						8				
5817	Lockwasher (1/4")						8				
7004	Nut (1/4"-28)						8				
173150	Front seat (left) locking lever						1				
173513	Front seat (left) locking lever pin						1				
173148	Front seat (left) locking lever bracket						1				
173313	Front seat (left) locking lever spring						1				
180842	Front seat (left) locking stud	1	1	1		1		1			
183528	Front seat (left) locking spring	1	1	1		1		1			
187739	Front seat (left) locking spring								1	1	
187736	Front seat (left) operating handle assembly								1	1	
146103	Spring								1	1	
3912	Washer (7/16")								1	1	
4290	Pin (3/32" x 5/8") spring cotter								1	1	
5502	Lockwasher (1/4")								1	1	
7004	Nut (1/4"-28)								1	1	
187740	Front seat (left) operating shaft cam								1	1	
180666	Front seat (left) operating spring	1	1	1		1		1	1	1	
180845	Front seat (left) support bar assembly	1	1	1		1		1			
180844	Front seat (left) support bar handle	1	1	1		1		1			

packardinfo.com

GOLF COMPARTMENT

Piece No.	Name	Number Required 503	513 543	504 514	505 515	506 516	507 517	508 518	509 519	523 533	527 537
193310	Golf compartment door trimmed assembly							1	1		
111671	Golf compartment door bumper							2	2		
111672	Golf compartment door bumper socket							2	2		
163766	Golf compartment door hinge							1	1		
163767	Golf compartment door lock							1	1		
143615	Golf compartment door lock striker							1	1		

GRIP HANDLE

185878	Grip handle (for models 514-515)			2	2						

HASSOCK

135807	Hassock					2					

INSTRUMENT BOARD

185782	Instrument board assembly	1	1	1	1	1	1	1	1	1	1
187986	Instrument board compartment door frame assembly - right	1	1	1	1	1	1	1	1	1	1
187985	Instrument board compartment door frame assembly - left	1	1	1	1	1	1	1	1	1	1
5724	Screw (No. 8 - 32 x 3/8" oval hd.)	4	4	4	4	4	4	4	4	4	4
5860	Washer (No. 8)	4	4	4	4	4	4	4	4	4	4
185893	Instrument board compartment door anti-rattler	2	2	2	2	2	2	2	2	2	2
180307	Instrument board compartment door hinge assembly	2	2	2	2	2	2	2	2	2	2
5859	Rivet (3/16 x 5/16" tub. rnd. hd.)	4	4	4	4	4	4	4	4	4	4
187495	Instrument board compartment door knob	2	2	2	2	2	2	2	2	2	2
5569	Screw (No. 10 - 32 x 1/2" fill. hd. mach.)	2	2	2	2	2	2	2	2	2	2
5500	Lockwasher (1/4")	2	2	2	2	2	2	2	2	2	2
184753	Instrument board compartment door panel assembly right	1	1	1	1	1	1	1	1	1	1
184754	Instrument board compartment door panel assembly left	1	1	1	1	1	1	1	1	1	1
105029	Instrument board compartment door spring dowel	2	2	2	2	2	2	2	2	2	2
180301	Instrument board compartment door striker plate	2	2	2	2	2	2	2	2	2	2
141649	Rivet (3/16" x 1/4" rnd. hd. tub.)	4	4	4	4	4	4	4	4	4	4
190674	Instrument board steering post bracket support	1	1	1	1	1	1	1	1	1	1
5764	Screw (1/4 -28 x 3/4" O. H. mach.)	2	2	2	2	2	2	2	2	2	2
7870	Screw (1/4 -28 x 5/8" hex. hd.)	2	2	2	2	2	2	2	2	2	2
3868	Washer (1/4")	2	2	2	2	2	2	2	2	2	2
5502	Lockwasher (1/4")	4	4	4	4	4	4	4	4	4	4
7004	Nut (1/4" -28)	2	2	2	2	2	2	2	2	2	2
187416	Instrument board steering post bracket support liner	1	1	1	1	1	1	1	1	1	1

MOULDING

193089	Moulding cowl rail finishing (for models 509-523-527)								1	1	1
193090	Moulding cowl rail finishing (for models 519-533-537)								1	1	1
185772	Moulding cowl rail finishing (for models 503-543-504-5-6-7-8)	1	1	1	1	1	1	1			
185771	Moulding cowl rail finishing (for models 513-14-15-16-17-18)		1	1	1	1	1	1			
187993	Moulding door window finishing -right (for model 508)							1			
195768	Moulding door window finishing - right (for model 537)										1
193055	Moulding door window finishing - right (for model 509)								1		
195770	Moulding door window finishing - right (for model 527)										1
193079	Moulding door window finishing -right (for model 519)								1		
195762	Moulding door window finishing - front right (for model 523)									1	
185596	Moulding door window finishing - front right (for models 503-543-504-505-6-7)	1	1	1	1	1	1				
195760	Moulding door window finishing - front right (for model 533)									1	
193080	Moulding door window finishing - left (for model 519)								1		
195769	Moulding door window finishing - left (for model 537)										1
193066	Moulding door window finishing - left (for model 509)								1		
195771	Moulding door window finishing - left (for model 527)										1
187992	Moulding door window finishing - left (for model 508)							1			

Revised November, 1931

packardinfo.com

Piece No.	Name	Number Required 503	513 543	504 514	505 515	506 516	507 517	508 518	509 519	523 533	527 537
195763	Moulding door window finishing front left (for model 523)	..	..	..	..	..	..	..	..	1	..
185597	Moulding door window finishing front left (for models 503-543-504 505-506-507)	1	1	1	1	1	1	..	..	..	.
195761	Moulding door window finishing -front left (for model 533)	..	..	..	..	..	..	.	..	1	..
185812	Moulding door window finishing -front upper right (for models 514-515)	..	..	1	1	..	..	..	..	..	.
185813	Moulding door window finishing front upper left (for models 514-515)	..	..	1	1	..	..	..	..	.	.
185755	Moulding door window finishing - front lower right (for models 514-515)	..	..	1	1	..	..	..	..	..	..
187147	Moulding door window finishing —front lower right (for models 513-516-517-518)	..	1	..	..	1	1	1	..	..	..
185756	Moulding door window finishing - front lower left (for models 514-515)	..	..	1	1	..	..	..	..	..	.
187148	Moulding door window finishing front lower left (for models 513-516-17-18)	..	1	..	..	1	1	1	..	..	..
195764	Moulding door window finishing rear right (for model 523)	..	..	..	..	..	..	..	..	1	..
185549	Moulding door window finishing rear right (for models 503-543-504-505-6)	1	1	1	1	1	..	..	..	..	..
195766	Moulding door window finishing -rear right (for model 533)	..	..	..	..	..	..	..	..	1	..
185550	Moulding door window finishing - rear left (for models 503-504-5-6-543)	1	1	1	1	1	..	..	..	..	..
195765	Moulding door window finishing - rear left (for model 523)	..	..	..	..	..	..	..	..	1	..
195767	Moulding door window finishing - rear left (for model 533)	..	..	..	..	..	..	..	..	1	..
187007	Moulding door window finishing —rear upper (for models 514-515)	..	..	2	2	..	..	..	..	..	..
185757	Moulding door window finishing —rear lower (for models 514-515)	..	..	2	2	..	..	..	..	..	..
187017	Moulding door window finishing —rear lower right (for models 513-516)	..	2	..	..	2	..	..	..	..	..
187124	Moulding door window finishing—front side—front right (for models 513-14-15-16-17-18)	..	1	1	1	1	1	1	..	..	..
187125	Moulding door window finishing—front side—front left (for models 513-14-15-16-17-18)	..	1	1	1	1	1	1	..	..	..
195772	Moulding door window finishing panel - right (for model 537)	..	..	..	..	..	..	..	..	..	1
195774	Moulding door window finishing panel -right (for model 527)	..	..	..	..	..	..	..	..	..	1
195773	Moulding door window finishing panel - left (for model 537)	..	..	..	..	..	..	..	..	..	1
195775	Moulding door window finishing panel - left (for model 527)	..	..	..	..	..	..	..	..	..	1
185998	Moulding door window finishing panel—front right (for models 513-16-17-18)	..	1	..	..	1	1	1	..	..	.
185999	Moulding door window finishing panel—front left (for models 513-16-17-18)	..	1	..	..	1	1	1	..	..	..
185671	Moulding door window finishing panel—front right (for models 514-515)	..	..	1	1	..	..	..	..	..	
185672	Moulding door window finishing panel—front left (for models 514-515)	..	..	1	1	..	..	..	..	..	..
187012	Moulding door window finishing panel —rear right (for models 513-516)	..	1	..	..	1	..	..	..	..	..
187013	Moulding door window finishing panel —rear left (for models 513-516)	..	1	..	..	1	..	..	..	..	..
185670	Moulding door window finishing panel —rear right (for models 514-515	..	..	1	1	..	..	..	..	..	..
185669	Moulding door window finishing —rear left (for models 514-515)	..	..	1	1	..	..	..	..	..	
187549	Moulding door window finishing -side (for models 513-514-515-516-517)	..	3	3	3	3	1	..	..	..	.
187988	Moulding door window finishing -side rear right (for model 518)	..	..	..	..	..	..	1	..	..	..
187989	Moulding door window finishing —side rear left (for model 518)	..	..	..	..	..	..	1	..	..	..
187550	Moulding door window finishing—side (for models 513-514-515-516-517)	..	3	3	3	3	1	..	..	..	..
187146	Moulding door window finishing —front upper left (for models 513-516-517)	..	1	..	..	1	1	..	..	..	..

packardinfo.com

Printed in U. S. A.

Piece No.	Name	Number Required 503	513 543	504 514	505 515	506 516	507 517	508 518	509 519	523 533	527 537
187145	Moulding door window finishing front upper right (for models 513 516 517)		1			1	1				
187991	Moulding door window finishing upper left (for model 518)							1			
187990	Moulding door window finishing upper right (for model 518)							1			
187016	Moulding door window finishing rear upper (for models 513-516)		2			2					
185767	Moulding front pillar finishing—right	1	1	1	1	1	1	1			
185768	Moulding front pillar finishing—left	1	1	1	1	1	1	1			
185913	Moulding partition window finishing (for model 505)				1						
193185	Moulding partition window finishing—center left (for model 505)				1						
193184	Moulding partition window finishing—center right (for model 505)				1						
185911	Moulding partition window finishing lower (for model 515)				1						
185879	Moulding partition window finishing panel (for model 515)				1						
187562	Moulding partition window finishing side right (for model 515)				1						
187563	Moulding partition window finishing side left (for model 515)				1						
187564	Moulding partition window finishing—upper (for model 515)				1						
187654	Moulding rain gutter—left (89″ long)	1	1								
187657	Moulding rain gutter—left (101″ long) (for models 514-515)			1	1						
187655	Moulding rain gutter—left (96″ long) (for models 504-505)			1	1						
193312	Moulding rain gutter—left (38 1/2″ long)							1			
187659	Moulding rain gutter—left (70″ long)					1					
193314	Moulding rain gutter—left (65 1/2″ long)						1				
187653	Moulding rain gutter—right (89″ long)	1	1								
187658	Moulding rain gutter—right (101″ long) (for models 514-515)			1	1						
193313	Moulding rain gutter—right (38 1/2″ long)							1			
187656	Moulding rain gutter—right (96″ long) (for models 504-505)			1	1						
193315	Moulding rain gutter—right (65 1/2″ long)						1				
187660	Moulding rain gutter—right (70″ long)					1					
193317	Screw (No. 4 x 1/2″) (Parker Kalon special) flat head	4	4	4	4	4	4	4			
166426	Moulding rear platform (44 1/2″ long)					1					
185552	Moulding rear window finishing (for models 503-543-504-505-506-507)	1	1	1	1	1	1				
193108	Moulding rear window finishing (for model 508)							1			
193120	Moulding rear window finishing—lower (for models 513-14-15-16-17-18)		1	1	1	1	1	1			
193122	Moulding rear window finishing—upper (for model 518)							1			
185758	Moulding rear window finishing—upper (for models 513-514-15-16-17)		1	1	1	1	1				
185580	Moulding side window finishing—right (for models 503-543)	1	1								
185563	Moulding side window finishing—right (for models 504-505)			1	1						
187847	Moulding side window finishing—right (for model 507)						1				
185579	Moulding side window finishing—left (for models 503-543)	1	1								
185564	Moulding side window finishing—left (for models 504-505)			1	1						
187848	Moulding side window finishing—left (for model 507)						1				
187552	Moulding side window finishing—front right (for models 513-14-15-17)		1	1	1		1				
187551	Moulding side window finishing—front left (for models 513-514-515-517)		1	1	1		1				
187897	Moulding side window finishing—lower right (for model 517)						1				
187898	Moulding side window finishing—lower left (for model 517)						1				
185662	Moulding side window finishing—lower right (for models 514-515)			1	1						
185661	Moulding side window finishing—lower left (for models 514-515)			1	1						
185928	Moulding side window finishing—lower (for model 513)		2								
185972	Moulding side window finishing panel—right (for model 513)		1								
187916	Moulding side window finishing panel—right (for model 517)						1				

packardinfo.com

Piece No.	Name	Number Required 503	513 543	504 514	505 515	506 516	507 517	508 518	509 519	523 533	527 537
185674	Moulding side window finishing panel right (for models 514-515)			1	1						
185675	Moulding side window finishing panel left (for models 514-515)			1	1						
187917	Moulding side window finishing panel left (for model 517)						1				
185973	Moulding side window finishing panel left (for model 513)		1								
185927	Moulding side window finishing rear right (for model 513)		1								
187899	Moulding side window finishing rear right (for model 517)						1				
185664	Moulding side window finishing rear right (for models 514-515)			1	1						
185926	Moulding side window finishing rear left (for model 513)		1								
187900	Moulding side window finishing rear left (for model 517)						1				
185663	Moulding side window finishing rear left (for models 514-515)			1	1						
5768	Screw (No. 4-40 x 7/8" oval hd. mach.)	6	6	6	6	6	6	6			
8020	Screw (No. 4-40 x 1/2" oval hd. mach.)	6	6	6	6	6	6	6			
33170	Wood screw ferrule	x	x	x	x	x	x	x			

PANELS

187001	Panel cowl assembly	1	1	1	1	1	1	1			
187933	Panel cowl assembly								1	1	1
187357	Panel dash assembly	1	1	1	1	1	1	1	1		
187787	Panel dash cover assembly	1	1	1	1	1	1	1	1	1	1
185690	Panel dash interliner	1	1	1	1	1	1	1	1	1	1
185610	Panel dash liner	1	1	1	1	1	1	1	1	1	1
185956	Panel door right assembly							1			
195692	Panel door right assembly								1		
185957	Panel door left assembly							1			
195691	Panel door left assembly								1		
185958	Panel door front right assembly (for models 503-513-543-504-505-506-516-517-518)	1	1	1	1	1	1				
185948	Panel door front right assembly (for models 514-515)			1	1						
185959	Panel door front left assembly (for models 503-513-543-504-505-506-516-507-517)	1	1	1	1	1	1				
185949	Panel door front left assembly (for models 514-515)			1	1						
185962	Panel door rear right assembly					1					
185960	Panel door rear right assembly (for models 513-543-504-505)		1	1	1						
187358	Panel door rear right assembly	1									
185950	Panel door rear right assembly (for models 514-515)			1	1						
185951	Panel door rear left assembly (for models 514-515)			1	1						
185961	Panel door rear left assembly (for models 513-543-504-505)		1	1	1						
187359	Panel door rear left assembly	1									
185963	Panel door rear left assembly					1					

REAR COMPARTMENT

173312	Rear compartment door assembly						1				
122213	Rear compartment door brace assembly						1				
5676	Screw (No. 10-32 x 3/4")						1				
5500	Lockwasher (No. 10)						1				
7003	Nut (No. 10-32)						1				
111687	Rear compartment door bumper						2				
172133	Rear compartment door drain gutter assembly						1				
158994	Rear compartment door hinge						2				
5684	Bolt (1/4-28 x 1 7/8" common carriage)						4				
5502	Lockwasher (1/4")						4				
7004	Nut (1/4"-28)						4				
102590	Rear compartment light bulb-7 V. 3 C. P. G-6 single contact						1				
107654	Rear compartment light disconnector plug socket						1				
136593	Rear compartment light switch (2 point)						1				
176282	Rear compartment door lock						1				

Printed in U. S. A.

packardinfo.com

Piece No.	Name	Number Required 503 / 543	511 / 513	504 / 514	505 / 515	506 / 516	507 / 517	508 / 518	509 / 519	521 / 533	527 / 537
176207	Rear compartment door lock handle (with key lock)						1				
8018	Screw (No. 8 -32 x $\frac{7}{16}$" oval head)						1				
184249	Washer						1				
5581	Lockwasher ($\frac{5}{32}$")						1				
176307	Rear compartment door lock striker						1				
187828	Rear compartment door weatherstrip long						2				
187829	Rear compartment door weatherstrip short						2				

REAR QUARTER LIGHT

187288	Rear quarter light (for models 513-14-15-16-17-18)		2	2	2	2	2	2			
102590	Rear quarter light bulb 7 V. 3 C. P. G-6 single contact (for models 513-14-15-16-17-18)		2	2	2	2	2	2			
187301	Rear quarter light glass and rim (for models 513-14-15-16-17-18)		2	2	2	2	2	2			
180638	Rear quarter light reflector (for models 513-14-15-16-17-18)		2	2	2	2	2	2			
187287	Rear quarter light switch (for models 513-14-15-16-17-18)		1	1	1	1	1	1			

REAR VIEW MIRROR

193462	Rear view mirror assembly								1	1	1
179526	Rear view mirror assembly	1	1	1	1	1	1	1			
5631	Screw (No. 10 -32 x $\frac{1}{4}$" rnd. hd.)								2	2	2
187293	Rear view mirror bracket assembly	1	1	1	1	1	1	1			
191368	Rear view mirror glass								1	1	1
191367	Rear view mirror glass	1	1	1	1	1	1	1			

ROBE RAIL

187291	Robe rail assembly (for models 503-543-504-506-523)	1	1	1		1				1	
185897	Robe rail assembly (for models 513-516-533)		1			1				1	
187837	Robe rail complete (for models 514-515)			1	1						
187327	Robe rail assembly (for model 505)				1						
187913	Robe rail assembly (for models 514-515)			1	1						

RUMBLE SEAT

157018	Rumble seat compartment door bumper							2	2		
187730	Rumble seat compartment door hinge —right							1	1		
187729	Rumble seat compartment door hinge —left							1	1		
7604	Bolt ($\frac{1}{4}$ —28 x $1\frac{5}{8}$" carriage common)							6	6		
7004	Nut ($\frac{1}{4}$"—28)							6	6		
5502	Lockwasher ($\frac{1}{4}$")							6	6		
157583	Rumble seat compartment door operating spring							2	2		
157584	Rumble seat compartment door operating bolt							2	2		
7104	Nut ($\frac{1}{4}$"—28 castle)							2	2		
4280	Cotter pin ($\frac{1}{16}$ x $\frac{1}{2}$")							2	2		
157585	Rumble seat compartment door operating spring washer							2	2		
127501	Rumble seat compartment door hinge bushing							2	2		
127498	Rumble seat compartment door hinge screw							2	2		
3884	Washer ($\frac{1}{2}$")							2	2		
5510	Lockwasher ($\frac{1}{2}$")							2	2		
157625	Rumble seat compartment door lock striker							1	1		
187773	Rumble seat compartment drain gutter assembly							1	1		
102590	Rumble seat compartment light bulb—7 V. 3 C. P. G-6 single contact							1	1		
107654	Rumble seat compartment light disconnector plug socket							1	1		
136593	Rumble seat compartment light switch (2 point)							1	1		
148338	Rumble seat door lock							1	1		
193062	Rumble seat door lock operating cable assembly								1		

packardinfo.com

Piece No.	Name	Number Required 503	513 543	504 514	505 515	506 516	507 517	508 518	509 519	523 533	527 537
7513	Yoke end adj. ($\frac{3}{16}$") (S. A. E.)								1		
7523	Yoke end pin ($\frac{3}{16}$")								1		
3906	Washer ($\frac{3}{16}$")								2		
4690	Pin ($\frac{1}{16}$ x $\frac{3}{8}$") spring cotter								1		
147406	Clip								2		
8207	Screw (No. 10—32 x $\frac{3}{4}$" flat hd. mach.)								2		
5500	Lockwasher (No. 10)										
7003	Nut (No. 10)										
193063	Rumble seat door lock operating handle								1		
148339	Rumble seat door lock operating lever							1			
187889	Rumble seat door lock operating rod and yoke end assembly							1			
7513	Yoke end adj. ($\frac{3}{16}$")							1			
7003	Nut (No. 10)							1			
7523	Yoke end pin ($\frac{3}{16}$")							3			
3906	Washer—plain ($\frac{3}{16}$")							4			
4690	Pin—cotter spring ($\frac{3}{16}$ x $\frac{3}{8}$")							3			
193221	Rumble seat step bracket—upper							1	1		
193421	Rumble seat step—lower (side wheel carrier) (for models 518-519)							1	1		
193278	Rumble seat step—lower (rear wheel carrier) (for models 518-519)							1	1		
193419	Rumble seat step—lower (side wheel carrier) (for models 508-509)							1	1		
193228	Rumble seat step—lower (rear wheel carrier) (for models 508-509)							1	1		
175144	Rumble seat step lower clamp plate							2	2		
7837	Screw ($\frac{1}{4}$"—20 x $\frac{7}{8}$" hex. hd. mach.) (for models 508-509)							2	2		
7859	Screw ($\frac{1}{4}$"—28 x 1$\frac{1}{2}$" hex. hd. mach.) (for models 518-519)							2	2		
7842	Screw ($\frac{1}{4}$"—28 x 1$\frac{1}{4}$" hex. hd. mach.)							2	2		
5502	Lockwasher ($\frac{1}{4}$" std.)							4	4		
7004	Nut ($\frac{1}{4}$"—28)							4	4		
193271	Rumble seat step—upper							1	1		
6116	Stud ($\frac{3}{8}$")							3	3		
114055	Washer ($\frac{25}{64}$ x $\frac{3}{4}$ x $\frac{5}{32}$")							3	3		
5506	Lockwasher ($\frac{3}{8}$")							3	3		
7006	Nut ($\frac{3}{8}$"—24)							3	3		
7811	Screw ($\frac{5}{16}$"—24 x 1$\frac{3}{8}$" hex. hd. mach.)							2	2		
5504	Lockwasher ($\frac{5}{16}$")							2	2		
179123	Rumble seat step upper liner							1	1		

SEAT CUSHION AND SPRINGS

181966	Seat back spring—front				1						
195249	Seat back spring—front (for model 517)						2				
193151	Seat back spring—front (for model 507)						2				
195238	Seat back spring—front right (for models 513-514-516-518)		1	1		1		1			
193025	Seat back spring—front right (for models 503-543-504-506-508)	1	1	1		1		1			
187921	Seat back spring—front right (for model 509)								1		
193071	Seat back spring—front right (for model 519)								1		
195236	Seat back spring—front left (for models 513-514-516-518)		1	1		1		1			
193024	Seat back spring—front left (for models 503-543-504-506-508)	1	1	1		1		1			
187912	Seat back spring—front left (for model 509)								1		
193070	Sest back spring—front left (for model 519)								1		
185919	Seat back spring—rear (for models 503-543-504-505)	1	1	1	1						
187482	Seat back spring—rear (for model 505)					1					
193375	Sest back spring—rear (for model 507)						1				
195248	Seat back spring—rear left (for model 517)						1				
195241	Seat back spring—rear left (for models 514-515)			1	1						

packardinfo.com

Piece No.	Name	Number Required 503	513 543	504 514	505 515	506 516	507 517	508 518	509 519	523 533	527 537
195244	Seat back spring rear left (for model 513)		1								
195246	Seat back spring rear left (for model 516)					1					
195240	Seat back spring rear right (for models 514-515)			1	1						
195243	Seat back spring rear right (for model 513)		1								
195245	Seat back spring rear right (for model 516)					1					
195247	Seat back spring rear right (for model 517)						1				
193069	Seat back spring rumble seat							1	1		
187258	Seat cushion assembly front (for model 505)				1						
187259	Seat cushion assembly front (for model 515)				1						
193292	Seat cushion assembly front left (for model 509)								1		
193293	Seat cushion assembly front left (for model 519)								1		
187335	Seat cushion assembly front left (for models 503-543-504-506-508)	1	1	1		1		1			
193294	Seat cushion assembly (for model 507)						1				
193295	Seat cushion assembly front left (for model 517)						1				
187337	Seat cushion assembly front left (for models 513-514-516-518)		1	1		1		1			
193296	Seat cushion assembly front right (for model 509)								1		
193297	Seat cushion assembly front right (for model 519)								1		
187336	Seat cushion assembly front right (for models 503-543-504-506-508)	1	1	1		1		1			
193298	Seat cushion assembly front right (for model 507)						1				
193299	Seat cushion assembly front right (for model 517)						1				
187338	Seat cushion assembly front right (for models 513-514-516-518)		1	1		1		1			
187450	Seat cushion assembly rear (for models 503-504-505)	1		1	1						
187451	Seat cushion assembly rear (for models 514-515)			1	1						
187452	Seat cushion assembly rear (for model 506)					1					
193280	Seat cushion assembly rear (for model 507)						1				
187453	Seat cushion assembly rear (for model 513)		1								
193455	Seat cushion assembly rear (for model 543)		1								
187454	Seat cushion assembly rear (for model 516)					1					
193281	Seat cushion assembly rear (for model 517)						1				
193027	Seat cushion assembly rumble seat							1	1		
181965	Seat cushion spring front right				1						
173237	Seat cushion spring front right (for model 507)						1				
195253	Seat cushion spring front right (for model 517)						1				
173311	Seat cushion spring front left (for model 507)						1				
195252	Seat cushion spring front left (for model 517)						1				
181044	Seat cushion spring front left (for models 503-4-6-8-543)	1	1	1		1		1			
195251	Seat cushion spring front left (for models 513-14-16-18)		1	1		1		1			
187911	Seat cushion spring front left (for model 509)								1		
195254	Seat cushion spring front left (for model 519)								1		
181043	Seat cushion spring front right (for models 503-4-6-8-543)	1	1	1		1		1			
195250	Seat cushion spring front right (for models 513-14-16-18)		1	1		1		1			
193026	Seat cushion spring front right (for model 509)								1		
195256	Seat cushion spring front right (for model 519)								1		
193448	Seat cushion spring rear (for model 543)		1								
185785	Seat cushion spring rear (for models 503-4-5)	1		1	1						
187522	Seat cushion spring rear (for models 514-515)			1	1						
185918	Seat cushion spring rear (for model 513)		1								
193374	Seat cushion spring rear (for model 517)						1				
193412	Seat cushion spring rear (for model 507)						1				
195255	Seat cushion spring rear (for model 516)					1					
187473	Seat cushion spring rear (for model 506)					1					
172294	Seat cushion spring folding seat			2	2						
193038	Seat cushion spring rumble seat							1	1		

SMOKING CASE

187577	Ash receiver cowl rail finishing moulding	1	1	1	1	1	1	1	1	1	1
187598	Smoking case ash receiver (for model 513)		2								

Piece No.	Name	503	513 543	504 514	505 515	506 516	507 517	508 518	509 519	523 533	527 537
		Number Required									
187599	Smoking case ash receiver (for model 513)		2								
185859	Smoking case ash receiver right front (for models 514-515-517)			1	1		1				
185860	Smoking case ash receiver right rear (for models 514-15-17)			1	1		1				
185860	Smoking case ash receiver left front (for models 514-15-17)			1	1		1				
185859	Smoking case ash receiver left rear (for models 514-15-17)			1	1		1				
193358	Smoking case ash receiver right					1					
193359	Smoking case ash receiver left					1					
185900	Smoking case cigar lighter (for model 506)					2					
185899	Smoking case cigar lighter (for models 513-514-515-516-517)		2	2	2	2	2				
182377	Smoking case cigar lighter tip (for models 506-513-14-15-16-17)		2	2	2	2	2				
185788	Smoking case clock (for models 514-515-517)			1	1		1				
193979	Smoking case clock retainer (for models 514-515-517)			1	1		1				
187593	Smoking case complete (for models 513-533-537)		2							1	2

TOGGLE GRIP

185698	Toggle grip (for models 503-543 504-5-6-7)	2	2	2	2	2	2				
185622	Toggle grip (for models 513-516-517)		2		2	2					

TONNEAU LIGHT

180645	Tonneau light assembly									1	
102590	Tonneau light bulb 7V. 3 CP. G6 single contact									1	
180646	Tonneau light glass and rim									2	
180647	Tonneau light reflector									2	
185031	Tonneau light switch									2	
127502	Tonneau light switch plunger plate									2	

TOP

193092	Top center bow								1		
193418	Top envelope assembly								1		
193181	Top folding pillar bumper								2		
193082	Top folding pillar hinge								2		
8234	Screw ($\frac{1}{4}$ 28 x $1\frac{3}{4}$" flat hd. mach.)								6		
62065	Washer ($\frac{1}{4}$")								6		
5502	Lockwasher ($\frac{1}{4}$")								6		
7004	Nut ($\frac{1}{4}$" 28)								6		
193148	Top folding pillar hinge bracket right								1		
193147	Top folding pillar hinge bracket left								1		
7613	Bolt ($\frac{1}{4}$ 28 x $1\frac{3}{4}$" carriage)								8		
5502	Lockwasher ($\frac{1}{4}$")								8		
7004	Nut ($\frac{1}{4}$" 28)								8		
193162	Top folding pillar hinge pin								2		
5504	Lockwasher ($\frac{5}{16}$")								2		
193437	Top to front pillar weather strip right								1	1	1
193438	Top to front pillar weather strip left								1	1	1
193629	Top prop right assembly								1		
193630	Top prop left assembly								1		
193060	Top prop roller								2		
193061	Top prop roller screw								2		
193087	Top rear bow								1		
184505	Top rear bow slat tee nut								2		
193249	Top rear curtain window								1		
195270	Top rear curtain window glass								1		
193056	Top side rail center hinge assembly								2		
193180	Top to windshield clamp assembly								2	2	
193154	Top to windshield clamp catch								2	2	
156581	Top to windshield clamp hook								2		
193218	Top to windshield clamp lever								2		
193436	Top to windshield header weatherstrip								1	1	

packardinfo.com

TRUNK AND TRUNK PLATFORM

Piece No.	Name	Number Required 503	513 543	504 514	505 515	506 516	507 517	508 518	509 519	523 533	527 537
195797	Trunk assembly complete										1
195712	Trunk check bracket										4
195718	Trunk lid check assembly										1
195719	Trunk lid check assembly										1
195758	Trunk lid lock										2
187391	Rear platform trunk bar—center					3					
187394	Rear platform trunk bar—outside right					1					
187393	Rear platform trunk bar—outside left					1					

VENTILATOR

187098	Ventilator cover assembly	1	1	1	1	1	1	1	1	1	1
137537	Ventilator cover hinge screw	2	2	2	2	2	2	2	2	2	2
3868	Washer (1/4")	2	2	2	2	2	2	2	2	2	2
7104	Nut (1/4" 28 castle)	2	2	2	2	2	2	2	2	2	2
4280	Pin (1/16 x 1/2" cotter)	2	2	2	2	2	2	2	2	2	2
185776	Ventilator cover operating lever	1	1	1	1	1	1	1	1	1	1
7800	Screw (1/4 27 x 1" hex. hd. mach.)	2	2	2	2	2	2	2	2	2	2
5502	Lockwasher (1/4")	2	2	2	2	2	2	2	2	2	2
7004	Nut (1/4" - 28)	2	2	2	2	2	2	2	2	2	2
3868	Washer (1/4")	2	2	2	2	2	2	2	2	2	2
118555	Ventilator cover operating lever pin	1	1	1	1	1	1	1	1	1	1
118771	Ventilator cover operating pin roller	1	1	1	1	1	1	1	1	1	1
4280	Pin (1/16 x 1/2" cotter)	1	1	1	1	1	1	1	1	1	1
187192	Ventilator cover operating lever ratchet	1	1	1	1	1	1	1	1	1	1
5792	Ventilator cover operating lever ratchet yoke end pin (3/16")	1	1	1	1	1	1	1	1	1	1
4290	Pin (3/32 x 5/8" cotter)	1	1	1	1	1	1	1	1	1	1
138261	Ventilator cover spring	1	1	1	1	1	1	1	1	1	1
145383	Ventilator hinge adjusting plate assembly left	1	1	1	1	1	1	1	1	1	1
145384	Ventilator hinge adjusting plate assembly right	1	1	1	1	1	1	1	1	1	1
187137	Ventilator screen assembly	1	1	1	1	1	1	1	1	1	1
185800	Ventilator side door gutter and operating lever bracket assembly—right	1	1	1	1	1	1	1	1	1	1
185799	Ventilator side door gutter and operating lever bracket assembly	1	1	1	1	1	1	1	1	1	1
185798	Ventilator side door and hinge assembly right	1	1	1	1	1	1	1	1	1	1
185797	Ventilator side door and hinge assembly left	1	1	1	1	1	1	1	1	1	1
185893	Ventilator side door hinge bumper	2	2	2	2	2	2	2	2	2	2
185809	Ventilator side door hinge pin	2	2	2	2	2	2	2	2	2	2
4690	Pin spring (cotter 1/16 x 3/8")	2	2	2	2	2	2	2	2	2	2
185807	Ventilator side door operating lever	2	2	2	2	2	2	2	2	2	2
5982	Pin (3/16" yoke end short)	2	2	2	2	2	2	2	2	2	2
5981	Pin (3/16" yoke end long)	2	2	2	2	2	2	2	2	2	2
4690	Pin spring (cotter 1/16 x 3/8")	4	4	4	4	4	4	4	4	4	4
190192	Spring washer	4	4	4	4	4	4	4	4	4	4
187753	Ventilator side door operating lever handle	2	2	2	2	2	2	2	2	2	2
185801	Ventilator side door operating lever plunger	2	2	2	2	2	2	2	2	2	2
185808	Ventilator side door operating spring	2	2	2	2	2	2	2	2	2	2
185811	Ventilator side screen assembly	2	2	2	2	2	2	2	2	2	2
185814	Ventilator side weatherstrip	2	2	2	2	2	2	2	2	2	2
187126	Ventilator weatherstrip retainer assembly	1	1	1	1	1	1	1	1	1	1
185938	Ventilator weatherstrip	1	1	1	1	1	1	1	1	1	1

VISOR

179077	Sun visor hinge	2	2	2	2	2	2	2
179081	Sun visor panel trimmed assembly right	1	1	1	1	1	1	1
179082	Sun visor panel trimmed assembly left	1	1	1	1	1	1	1

packardinfo.com

WINDOW

Piece No.	Name	Number Required 503	513 543	504 514	505 515	506 516	507 517	508 518	509 519	523 533	527 537
178949	Window anti-rattler	4	4	4	4	4	2	2			
187982	Window anti-rattler								4	8	4
178928	Window anti-rattler partition—rear				1						
180693	Window anti-rattler partition—front				1						
185303	Window curtain rear assembly (for models 503-543-504-5-6-7-8)	1	1	1	1	1	1	1			
185304	Window curtain rear assembly (for models 513-14-15-16-17-18)		1	1	1	1	1	1			
185305	Window curtain side assembly (for model 513)		2								
185306	Window curtain side assembly (for models 514-515)			2	2						
185307	Window curtain side assembly (for models 503-543)	2	2								
185308	Window curtain side assembly (for model 517)						2				
185309	Window curtain side assembly (for models 504-505)			2	2						
185310	Window curtain side assembly (for model 507)						2				
29790	Window curtain guide cord	x	x	x	x	x	x	x			
185276	Window curtain roller rear assembly	1	1	1	1	1	1	1			
185277	Window curtain roller side assembly (for models 503-543)	2	2								
185278	Window curtain roller side assembly (for model 513)		2								
185279	Window curtain roller side assembly (for model 517)						2				
185280	Window curtain roller side assembly (for models 513-515-507)			2	2		2				
185281	Window curtain roller side assembly (for models 504-505)			2	2						
182434	Window curtain stick	3	3	3	3	1	3	1			
173514	Window curtain tassel (for models 513-514-15-16-17-18)		3	3	3	1	3	1			
170966	Window curtain tassel (for models 503-543-4-5-6-7-8)	3	3	3	3	1	3	1			
193046	Window frame door glass channel assembly—right							1			
193047	Window frame door glass channel assembly—left							1			
196034	Window glass anti-rattler door front								2		
196035	Window glass anti-rattler retainer door front								2		
187297	Window glass bumper (for models 503-543-504-5-6)	2	2	2	2	2					
195717	Window glass bumper—door									8	4
143554	Window glass cushion	x	x	x	x	x	x	x			
195492	Window glass cushion								x		
185346	Window glass cushion—rear	1	1	1	1	1	1				
187965	Window glass—door								2		
193022	Window glass—door							2			
185582	Window glass—door—front (for models 503-513-543-504-5-506-16-507-17)	2	2	2	2	2	2				
185576	Window glass—door—front (for models 514-515)			2	2						
185336	Window glass—door—rear (for models 503-13-543-504-5-506-16)	2	2	2	2	2					
185570	Window glass—door—rear (for models 514-15)			2	2						
171011	Window glass—partition—center (for model 505)				1						
181537	Window glass—partition (for model 515)				1						
181023	Window glass—partition—side right (for model 505)				1						
181024	Window glass—partition—side left (for model 505)				1						
185347	Window glass—rear	1	1	1	1	1	1				
172284	Window glass—rear							1			
185577	Window glass—side	2	2								
185578	Window glass—side			2	2						
187840	Window glass—side						2				
51331	Window glass packing	x	x	x	x	x	x	x	x		
162217	Window glass partition bumper				2						
193044	Window lifter assembly—door—right								1		
193045	Window lifter assembly—door—left								1		
178927	Window lifter bumper	x	x	x	x	x	x	x	x	x	x
185587	Window lifter—door—front right assembly (for models 503-4-5-6-7-8-513-16-17-18-543)	1	1	1	1	1	1	1			
185595	Window lifter—door—front right assembly (for models 514-515)			1	1						
185588	Window lifter—door—front left assembly (for models 503-513-543-504-5-506-16-507-17-508-18)	1	1	1	1	1	1	1			

packardinfo.com

Printed in U. S. A.

Piece No	Name	Number Required										
		503	513 543	504 514	505 515	506 516	507 517	508 518	509 519	523	527 537	
185594	Window lifter door front left assembly (for models 514 515)			1	1							
183850	Window lifter door rear right assembly (for models 503-513-543-504-505-506-516)	1	1	1	1	1						
184052	Window lifter door rear right assembly (for models 514-515)			1	1							
183851	Window lifter door rear left assembly (for models 503-513-543-504-505-506-516)	1	1	1	1	1						
184053	Window lifter door rear left assembly (for models 514-515)			1	1							
179619	Window lifter partition assembly (for model 505)				1							
181759	Window lifter partition assembly (for model 515)				1							
173415	Window lifter rear assembly							1				
187978	Window lifter regulator roller guide front right								1	1	1	
187977	Window lifter regulator roller guide front left								1	1	1	
183258	Window lifter regulator roller guide rear left								1	3	1	
183257	Window lifter regulator roller guide rear right								1	3	1	
185590	Window lifter side right assembly (for model 513)		1									
187104	Window lifter side right assembly (for models 503-543)	1	1									
185593	Window lifter side right assembly (for models 514-515)			1	1							
187879	Window lifter side right assembly						1					
184028	Window lifter side right assembly (for models 504-505)			1	1							
184029	Window lifter side left assembly (for models 504-505)			1	1							
185589	Window lifter side left assembly (for model 513)		1									
187105	Window lifter side left assembly (for models 503-543)	1	1									
185592	Window lifter side left assembly (for models 514-515)			1	1							
187878	Window lifter side left assembly						1					
187225	Window regulator door front right (for models 513-514-515-516-17-18)		1	1	1	1	1	1				
195788	Window regulator door front right									1	1	
183876	Window regulator door front right (for models 503-543-504-505-506-7-8)	1	1	1	1	1	1	1				
183173	Window regulator door left (for model 519)								1			
195652	Window regulator door left (for model 509)								1			
183172	Window regulator door right (for model 519)								1			
195651	Window regulator door right (for model 509)								1			
183877	Window regulator door front left (for models 503-543-504-505-6-7-8)	1	1	1	1	1	1	1				
195789	Window regulator door front left									1	1	
187226	Window regulator door front left (for models 513-514-515 516-17-18)		1	1	1	1	1	1				
184034	Window regulator door rear right (for models 503-543-504-5-6)	1	1	1	1	1						
195790	Window regulator door rear right									1		
187227	Window regulator door rear right (for models 513-514-515-516)		1	1	1	1						
184035	Window regulator door rear left (for models 503-543-504-505-506)	1	1	1	1	1						
195791	Window regulator door rear left									1		
187228	Window regulator door rear left (for models 513-514-515-516)		1	1	1	1						
185760	Window regulator handle long (for models 513-14-15-16-17-18-19-533-537)		4	4	4	4	2	2	2	4	2	
185850	Window regulator handle short (for models 503-543-504-5-7)	2	2	2	2		2					
185857	Window regulator handle short (for models 513-514-515)		2	2	3							
185858	Window regulator handle short (for model 517)						2					
185851	Window regulator handle long (for models 503-543-504-5-6-7-8-9-523-527)	4	4	4	5	4	2	3	2	4	2	
185851	Window regulator handle long (for model 518)							1				
187281	Window regulator handle escutcheon plate (for models 513-14-15-16-17-18-19-533-537)		4	4	4	4	2	2	2	4	2	
187229	Window regulator handle escutcheon plate (for model 515)				1							
187282	Window regulator handle escutcheon plate (for model 517)						2					

packardinfo.com

Piece No.	Name	Number Required 503	513 543	504 514	505 515	506 516	507 517	508 518	509 519	523 533	527 537
187283	Window regulator handle escutcheon plate (for models 513-14-15)		2	2	2						
187284	Window regulator handle escutcheon plate (for models 503-543-4-5-6-7-8-9-523-527)	6	6	6	7	4	4	3	2	4	2
187284	Window regulator handle escutcheon plate (for model 518)							1			
133264	Window regulator handle escutcheon plate spring (for models 503-513-4-5-506-16-507-17-508-18-509-19)	6	4	6	7	4	4	3	2	4	2
133264	Window regulator handle escutcheon plate spring (for models 543-14-15)		6	4	4						
180153	Window regulator handle pin (for models 513-14-15-16-17-18-19-533-537)		4	4	4	4	4	2	2	4	2
132972	Window regulator handle pin (for models 503-543-4-5-6-7-8-9-523-527)	6	6	6	7	4	4	3	2	4	2
132972	Window regulator handle pin (for model 518)							1			
180295	Window regulator handle screw (No. 10 -32 x $\frac{17}{32}$" cup point headless set) (for models 513-514-515)		2	2	3						
184057	Window regulator -partition (for model 515)				1						
184036	Window regulator -partition (for model 505)				1						
183882	Window regulator -rear							1			
187834	Window regulator -side right (for model 507)						1				
187836	Window regulator -side right (for model 517)						1				
184049	Window regulator -side right (for models 514-515)			1	1						
183880	Window regulator -side right (for models 503-543-4-5)	1	1	1	1						
184048	Window regulator -side right (for model 513)		1								
184049	Window regulator -side left (for model 513)		1								
184048	Window regulator -side left (for models 514-515)			1	1						
183881	Window regulator -side left (for models 503-543-504-5)	1	1	1	1						
187833	Window regulator -side left (for model 507)						1				
187835	Window regulator -side left (for model 517)						1				

packardinfo.com

WINDSHIELD

185714	Windshield assembly	1	1	1	1	1	1	1			
187844	Windshield assembly								1	1	1
5588	Screw (No. 8 -32 x $\frac{7}{16}$" oval hd. mach.)	4	4	4	4	4	4	4	4	4	4
5312	Windshield to body screw (No. 8 -32 x $\frac{3}{8}$" oval hd. mach.)	24	24	24	24	24	24	24		24	24
5586	Windshield to body screw (No. 8 -32 x $\frac{5}{16}$" flat hd. mach.)								24		
194871	Windshield cable -short (1 $\frac{23}{32}$" long)	1	1	1	1	1	1	1			
194872	Windshield cable -intermediate (3 $\frac{9}{32}$" long)	1	1	1	1	1	1	1			
194873	Windshield cable -long (38 $\frac{1}{8}$" long)	1	1	1	1	1	1	1			
194874	Windshield cable adjusting nut -L. H. thread	1	1	1	1	1	1	1			
194875	Windshield cable adjusting nut -R. H. thread	1	1	1	1	1	1	1			
194876	Windshield cable adjusting screw	1	1	1	1	1	1	1			
194877	Windshield cable lever assembly	1	1	1	1	1	1	1			
193107	Windshield clamp ferrule -right								1	1	1
193106	Windshield clamp ferrule -left								1	1	1
185765	Windshield clamp ferrule -right	1	1	1	1	1	1	1			
187689	Windshield clamp ferrule -left	1	1	1	1	1	1	1			
187674	Windshield clamp striker plate assembly	2	2	2	2	2	2	2			
187681	Windshield clamp striker plate bracket	2	2	2	2	2	2	2			
187675	Windshield cleaner to dash connecting tube assembly	1	1	1	1	1	1	1			
193382	Windshield cleaner to dash connector tube assembly								1	1	1
177851	Windshield cleaner to dash connecting tube flared tube connection adapter	1	1	1	1	1	1	1	2	2	2
157477	Windshield cleaner to dash connecting tube union tube nut	1	1	1	1	1	1	1	2	2	2
177840	Windshield cleaner to dash connecting tube clip—single	1	1	1	1	1	1	1			
140009	Windshield cleaner hose								2	2	2
185141	Windshield cleaner hose	1	1	1	1	1	1	1			
185947	Windshield cleaner hose	2	2	2	2	2	2	2			
141305	Windshield cleaner hose								2	2	2
193380	Windshield cleaner intermediate tube assembly—right								1	1	1
193381	Windshield cleaner intermediate tube assembly—left								1	1	1

Printed in U. S. A

Piece No.	Name	Number Required 503	513 543	504 514	505 515	506 516	507 517	508 518	509 519	523 533	527 537
177851	Windshield cleaner intermediate tube flanged tube connection adapter								2	2	2
157477	Windshield cleaner intermediate tube union nut								2	2	2
193379	Windshield cleaner intermediate tube connection								1	1	1
177840	Windshield cleaner intermediate tube clip—single								2	2	2
193388	Windshield cleaner motor complete—left								1	1	1
193389	Windshield cleaner motor complete—right								1	1	1
185924	Windshield cleaner motor—right	1	1	1	1	1	1	1			
185925	Windshield cleaner motor—left	1	1	1	1	1	1	1			
187000	Windshield cleaner motor operating lever knob	2	2	2	2	2	2	2			
193764	Windshield cleaner motor operating lever ferrule	2	2	2	2	2	2	2			
193391	Windshield cleaner motor attaching screw								4	4	4
187635	Windshield cleaner motor shaft washer	2	2	2	2	2	2	2			
179708	Windshield cleaner motor shaft washer								2	2	2
193390	Windshield cleaner motor spacer								4	4	4
7911	Windshield cleaner motor support bracket screw (No. 10—32 x 3/8" rnd. hd.)	4	4	4	4	4	4	4			
5500	Lockwasher (No. 10)	4	4	4	4	4	4	4			
193301	Windshield cleaner pillar tube clip								4	4	4
185934	Windshield cleaner pillar tube coupling nut	1	1	1	1	1	1	1			
185935	Windshield cleaner pillar tube elbow	1	1	1	1	1	1	1			
185936	Windshield cleaner pillar tube tee connecting	1	1	1	1	1	1	1			
193407	Windshield cleaner wiper								2		
187010	Windshield cleaner wiper	2	2	2	2	2	2	2			
193406	Windshield cleaner wiper arm								2		
187592	Windshield cleaner wiper arm	2	2	2	2	2	2	2			
187011	Windshield cleaner wiper arm spring	2	2	2	2	2	2	2			
193269	Windshield cowl weatherstrip								1	1	1
185770	Windshield cowl weatherstrip	1	1	1	1	1	1	1			
5475	Screw (No. 4—40 x 5/16" flat hd.)								2	2	2
33170	Ferrule (No. 4)	2	2	2	2	2	2	2	2		
194867	Windshield finger pull assembly—right	1	1	1	1	1	1	1			
194982	Windshield finger pull assembly—left								1	1	1
194983	Windshield finger pull assembly—right								1	1	1
194866	Windshield finger pull and cable lever assembly	1	1	1	1	1	1	1			
194984	Windshield finger pull bracket								1	1	1
194868	Windshield finger pull cap nut	2	2	2	2	2	2	2	2	2	2
194869	Windshield finger pull cap nut spring	2	2	2	2	2	2	2	2	2	2
194859	Windshield frame and glass assembly	1	1	1	1	1	1	1			
194939	Windshield frame and glass assembly								1	1	1
185916	Windshield glass	1	1	1	1	1	1	1			
193209	Windshield glass								1	1	1
194870	Windshield hinge weather block	1	1	1	1	1	1	1			
194985	Windshield hinge weather block								1	1	1
193689	Windshield hinge weatherstrip								1	1	1
193675	Windshield hinge weatherstrip	1	1	1	1	1	1	1			
194861	Windshield locking mechanism—right	1	1	1	1	1	1	1			
194981	Windshield locking mechanism—right								1	1	1
194860	Windshield locking mechanism—left	1	1	1	1	1	1	1			
194980	Windshield locking mechanism—left								1	1	1
194864	Windshield locking mechanism lower screw	2	2	2	2	2	2	2	2	2	2
194865	Windshield locking mechanism upper screw	2	2	2	2	2	2	2	2	2	2
194987	Windshield locking mechanism link—right								1	1	1
194988	Windshield locking mechanism link—left								1	1	1
194878	Windshield right hand mechanism locking cap screw	1	1	1	1	1	1	1	1	1	1
194879	Windshield right hand mechanism locking screw spring washer	1	1	1	1	1	1	1			
194986	Windshield right hand mechanism lock cap screw washer								1	1	1
185831	Windshield sash glass retainer weatherstrip	1	1	1	1	1	1	1			

packardinfo.com

TRIMMING MATERIAL

Piece No.	Name	Number Required 503	513 543	504 514	505 515	506 516	507 517	508 518	509 519	523 533	527 537
180051	Binding cloth wire-on (cordless) ($^{5}/_{8}$" wide) (for models 503-543 504-5-6-7-8)	x	x	x	x	x	x	x			
139910	Binding cloth wire-on	x	x	x	x	x	x	x			
167438	Binding cloth wire-on (cordless) ($^{1}/_{2}$" wide)				x						
192035	Binding cloth wire-on (leather cord skiver grain)	x	x	x		x		x			
155689	Binding ($1^{1}/_{8}$") leather colonial grain				x				x		
164370	Binding ($1^{1}/_{8}$") leather skiver grain	x	x	x	x	x	x	x			
156691	Binding ($1^{1}/_{8}$") leather imitation colonial grain							x	x		
192294	Binding ($1^{1}/_{2}$") leather colonial grain (for models 515 and 509-519)				x				x		
192295	Binding ($2^{1}/_{4}$") leather colonial grain (for models 515 and 509-519)				x				x		
192037	Binding ($1^{1}/_{2}$") leather skiver grain	x	x	x	x	x	x	x			
192038	Binding ($2^{1}/_{4}$") leather skiver grain	x	x	x	x	x	x	x			
176573	Binding leather wire-on colonial grain				x			x	x		
192088	Binding imitation leather wire-on colonial grain	x	x	x	x	x	x	x	x		
176579	Binding leather wire-on (cordless)				x						
29595	Burlap (10 oz. -40" wide) (for models 513-504-14-505-15-516-517)		x	x	x	x	x				
113980	Carpet—woolen (36" wide)	x	x	x	x	x	x	x	x		
166901	Carpet—hair (36" wide)						x	x	x		
29651	Cloth—cotton (36" wide)	x	x	x	x	x	x	x			
185467	Cord ($^{5}/_{64}$" manila)	x	x	x	x	x	x	x			
29612	Cord ($^{1}/_{8}$" twisted paper) (for models 513-14-15-16-17-18-19)		x	x	x	x	x	x	x		
182894	Cord ($^{1}/_{4}$" twisted paper) (for models 513-14-15-16-17-18-19)		x	x	x	x	x	x	x		
197401	Cord welt—enameled drill	x	x	x	x	x	x	x	x		
113822	Cord welt—enamel drill	x	x			x		x	x		
159187	Cord welt—($^{3}/_{4}$ x $^{1}/_{4}$") colonial leather				x			x	x		
182627	Cord welt—leather colonial grain ($^{21}/_{32}$ x $^{5}/_{32}$")				x				x		
156696	Cord welt ($^{13}/_{16}$ x $^{3}/_{16}$") leather colonial grain (for models 515-519)				x				x		
193726	Cord welt—leather skiver grain ($^{21}/_{32}$ x $^{5}/_{32}$") (for models 503-543-4-5-6-7)	x	x	x	x	x	x				
192043	Cord welt—leather skiver grain ($^{21}/_{32}$ x $^{5}/_{32}$") (for models 503-543-504-5-6-7-8)	x	x	x	x	x	x	x			
164373	Cord welt—leather ($^{13}/_{16}$ x $^{3}/_{16}$") skiver grain (for models 515-14-15-16-17-18)		x	x	x	x	x	x			
182628	Cord welt seaming lace ($^{3}/_{8}$ x $^{3}/_{4}$")					x					
173243	Cord welt seaming lace ($^{13}/_{16}$ x $^{3}/_{16}$")	x	x	x	x	x	x	x			
161787	Drill—white cotton (7 oz.—36" wide)	x	x	x	x	x	x	x	x		
105025	Drill—enameled (50" wide—long grain)	x	x	x	x	x	x	x	x		
185211	Fabric (58") upholstering (for models 513-14-15-16-17-18)		x	x	x	x	x	x			
113981	Fabric—upholstering (for models 503-543-4-5-6-7-8)	x	x	x	x	x	x	x			
195226	Fabric—top material (54" wide) (Burbank 1220 drab)								x		
115026	Fabric (60") upholstering headlining (for models 503-543-504-5-6-7-8)	x	x	x	x	x	x	x			
174196	Fabric (57") headlining (for models 503-543-4-5-6-7-8)	x	x	x	x	x	x	x			
174513	Fabric (54") filled mole skin	x	x	x	x	x	x	x	x		
156541	Fabric—roof covering (Duratex) two ply aqua-proof quantity grain deck A (45" wide)	x	x	x	x	x	x	x			
195247	Fabric—side curtain (Burbank) 1220 drab								x		
170310	Gimp ($^{1}/_{2}$") leather colonial grain				x				x		
156692	Gimp ($^{1}/_{2}$") imitation black colonial leather	x	x	x	x	x	x	x	x		
156857	Gimp ($^{3}/_{4}$") bias cut imitation leather colonial grain (for model 509)								x		
175234	Gimp ($^{3}/_{4}$") leather colonial grain (for model 519)								x		
192218	Gimp ($^{1}/_{2}$") leather skiver grain	x	x	x		x	x	x			
163172	Kersey felt (45" wide)	x	x	x	x	x	x				
127260	Lace pasting (for models 504-505)			x	x						
159984	Leather—imitation black patent leather finish	x	x	x	x	x	x	x	x		

packardinfo.com

Custom Body

Service Parts List

Insert for Models

904	*Passenger*	*Description*
4000	7	Large All-Weather Cabriolet
4001	7	Large All-Weather Cabriolet-Landaulet
4002	7	Large All-Weather Town Car
4003	7	Large All-Weather Town Car Landaulet
4004	7	Cabriolet Sedan
4005	5	Sport Sedan
4006	7	Large All-Weather Brougham
4007	7	Sedan Limousine
4008	7	Small All-Weather Cabriolet
4009	7	Small All-Weather Cabriolet-Landaulet

packardinfo.com

Issued October, 1931

To be filed in Model 7th, 8th and 9th series Service Parts List immediately following 8th series Custom Body Insert.

Copyright 1931

PACKARD MOTOR CAR COMPANY
DETROIT, MICHIGAN

VT-2000-10-31

PRINTED IN U.S.A.

CUSTOM BODY ATTACHING PARTS

Piece No.	Name	No. Required 4000	4001	4002	4003	4004	4005	4006	4007	4008	4009
187627	Body to frame bolt No. 1 carriage bolt ($\frac{7}{16}$" 20 x 2 $\frac{11}{16}$" skew head	2	2	2	2	2	2	2	2	2	2
5282	Body to frame bolt No. 2 screw ($\frac{7}{16}$"—20 x 3 $\frac{1}{2}$" hex. hd. mach.)	2	2	2	2	2	2	2	2	2	2
7873	Body to frame bolt No. 3 screw ($\frac{7}{16}$"—20 x 2 $\frac{1}{4}$" hex. hd. mach.)	..	..	..	..	..	2	..	..	..	..
5313	Body to frame bolt No. 3 screw ($\frac{7}{16}$" 20 x 4 $\frac{1}{4}$" hex. hd. mach.)	..	..	..	..	2	..	..	2	..	..
5281	Body to frame bolt No. 3 screw ($\frac{7}{16}$"—20 x 3 $\frac{7}{8}$" hex. hd. mach.)	2	2	2	2	..	..	2	..	2	2
5968	Body to frame bolt No. 4 screw ($\frac{7}{16}$"—20 x 4" flat hd. mach.)	2	2	2	2	2	..	2	2	2	2
5282	Body to frame bolt No. 4 screw ($\frac{7}{16}$"—20 x 3 $\frac{1}{2}$" hex. hd. mach.)	..	..	..	..	..	2	..	..	..	..
5671	Body to frame bolt No. 5 screw ($\frac{7}{16}$"—20 x 5 $\frac{3}{8}$" hex. hd. mach.)	2	2	2	2	2	2	..	2	2	2
187285	Body to frame bolt No. 5 carriage bolt ($\frac{7}{16}$" 20 x 7 $\frac{3}{16}$" skew head)	..	..	..	..	..	..	2	..	..	..
131809	Body to frame bolt washer (large washer, $\frac{7}{16}$")	2	2	2	2	4	2	2	4	2	2
131046	Body to frame bolt washer (small washer, $\frac{7}{16}$")	10	10	10	10	10	10	10	10	10	10
5508	Body to frame bolt (lockwasher, $\frac{7}{16}$")	8	8	8	8	8	8	8	8	8	8
5805	Body to frame bolt lockwasher	2	2	2	2	2	2	2	2	2	2
7007	Body to frame bolt nut, ($\frac{7}{16}$" 20)	8	8	8	8	10	8	8	10	8	8
182439	Body to frame bolt nut lock	2	2	2	2	2	2	2	2	2	2
193883	Body to frame liner ($\frac{1}{16}$" thick)	x	x	x	x	x	x	x	x	x	x
193930	Body to frame liner ($\frac{1}{8}$" thick)	x	x	x	x	..	..	x	..	..	..
193931	Body to frame liner ($\frac{1}{16}$" thick)	..	..	..	..	x	x	..	x	x	x
185271	Body to frame liner ($\frac{1}{4}$" thick)	x	x	x	x	x	x	x	x	x	x
185272	Body to frame liner ($\frac{5}{16}$" thick)	x	x	x	x	x	x	x	x	x	x
167924	Body to frame liner hand brake lever insulator	1	1	1	1	1	1	1	1	1	1
185270	Body hold-down bolt bracket liner ($\frac{3}{8}$" thick)	x	x	x	x	x	x	x	x	x	x
185274	Body hold-down bolt bracket liner ($\frac{1}{2}$" thick)	x	x	x	x	x	x	x	x	x	x
185273	Body hold-down bolt bracket liner ($\frac{1}{16}$" thick)	x	x	x	x	x	x	x	x	x	x
133104	Body hold-down bolt bracket liner ($\frac{1}{32}$" thick)	x	x	x	x	x	x	x	x	x	x

ARM REST

195437	Folding arm rest trimmed assembly	1	1	..	..	1	..	..	1	1	1
195438	Folding arm rest trimmed assembly	..	..	..	..	..	1	..	..	..	..
185825	Folding arm rest support bracket assembly	1	1	..	..	..	..	..	..	..	..
187221	Folding arm rest support bracket assembly	..	..	..	..	1	..	..	1	1	1
195497	Folding arm rest support bracket assembly	..	..	..	..	..	1	..	..	..	..
171580	Screw (No. 10 32 x $\frac{5}{8}$" flat hd. mach.)	6	6	..	..	6	6	..	6	6	6
7824	Screw ($\frac{1}{4}$" 28 x $\frac{3}{4}$" hex. hd. mach.)	4	4	..	..	4	4	..	4	4	4
5502	Lockwasher ($\frac{1}{4}$")	4	4	..	..	4	4	..	4	4	4
7004	Nut ($\frac{1}{4}$" 28)	4	4	..	..	4	4	..	4	4	4
187596	Arm rest vanity case mirror	..	..	..	..	1	..	..	1	1	1
187594	Arm rest vanity case memo book	..	..	..	..	1	..	..	1	1	1
180082	Arm rest vanity case memo book pencil	..	..	..	..	1	..	..	1	1	1

BONNET DASH LINERS

187253	Bonnet dash liner	2	2	2	2	2	2	2	2	2	2
187260	Bonnet dash liner hook	2	2	2	2	2	2	2	2	2	2
3865	Washer ($\frac{1}{4}$")	2	2	2	2	2	2	2	2	2	2
7002	Nut (No. 8 32)	2	2	2	2	2	2	2	2	2	2

packardinfo.com

CABLES

Piece No.	Name	No. Required 4000	4001	4002	4003	4004	4005	4006	4007	4008	4009
194219	Body wiring cable 19 strand No. 14 (green braid)	x	x	x	x	x	x	x	x	x	x
194218	Body wiring cable 19 strand No. 14 (red braid)	x	x	x	x	x	x	x	x	x	x
167069	Body wiring cable 19 strand No. 16 (green braid)	x	x	x	x	x	x	x	x	x	x
166406	Body wiring cable 19 strand No. 16 (red braid)	x	x	x	x	x	x	x	x	x	x
166404	Body wiring cable 19 strand No. 16 (black braid)	x	x	x	x	x	x	x	x	x	x
166405	Body wiring cable 19 strand No. 16 (black with red tracer braid)	x	x	x	x	x	x	x	x	x	x
176078	Body wiring cable clip	x	x	x	x	x	x	x	x	x	x
29254	Body wiring cable staple insulated (No. 1 x ½")	x	x	x	x	x	x	x	x	x	x
48202	Body wiring cable terminal	x	x	x	x	x	x	x	x	x	x
33287	Body wiring cable terminal	x	x	x	x	x	x	x	x	x	x
36111	Body wiring cable terminal insulator	x	x	x	x	x	x	x	x	x	x

CARPET

195233	Carpet assembly—folding seat floor	2	2	2	2	..	..	2	..	..	..
195221	Carpet assembly—front floor	..	..	..	..	..	1	..	..	..	..
195216	Carpet assembly front floor	1	1	1	1	1	..	1	1	1	1
195222	Carpet assembly rear floor	..	..	..	..	..	1	..	..	..	..
195217	Carpet assembly—rear floor	1	1	1	1	..	..	1	..	..	..
195223	Carpet assembly rear floor	..	..	..	..	1	..	..	1	..	..
195218	Carpet assembly rear floor	..	..	..	..	..	..	..	..	1	1

CANOPY

195200	Canopy assembly	1	1	1	1	..	..	1	..	1	1
193750	Canopy support assembly left	1	1	1	1	..	..	1	..	1	1
193749	Canopy support assembly right	1	1	1	1	..	..	1	..	1	1
184250	Canopy support to windshield thumb screw	2	2	2	2	..	..	2	..	2	2
183711	Canopy support to body dowel	4	4	4	4	..	..	4	..	4	4
185312	Canopy support socket	4	4	4	4	..	..	4	..	4	4

CLOCK

184697	Clock	1	1	1	1	..	..	1	..	1	1

DICTOGRAPH

193890	Dictograph receiver	1	1	1	1	1	..	1	1	1	1
5343	Screw (No. 10 32 x ½" rnd. hd. mach.)	2	2	2	2	2	..	2	2	2	2
5500	Lockwasher (No. 10)	2	2	2	2	2	..	2	2	2	2
7003	Nut (No. 10 32)	2	2	2	2	2	..	2	2	2	2
187609	Dictograph transmitter and winder assembly	1	1	1	1	1	..	1	1	1	1
5310	Screw (No. 8 32 x ¼" rnd. hd.)	2	2	2	2	2	..	2	2	2	2

DOME LIGHT

183833	Dome light	..	..	..	..	..	1	..	..	..	..
193921	Dome light	1	1	1	1	1	..	1	1	1	1
102585	Dome light bulb (Mazda No. 81) 6 C. P. G-6	2	2	2	2	2	1	2	2	2	2
185031	Dome light door switch	2	2	2	2	2	2	2	2	2	2
183834	Dome light glass and rim	1	1	1	1	1	1	1	1	1	1
185616	Dome light reflector	1	1	1	1	1	..	1	1	1	1
180636	Dome light reflector	..	..	..	..	..	1	..	..	..	..

packardinfo.com

Piece No.	Name	No. Required 4000	4001	4002	4003	4004	4005	4006	4007	4008	4009
199021	Dome light switch front (3-point)	1	1	1	1	..	..	1	..	1	1
184796	Dome light switch front (3-point)	..	..	..	..	1	..	..	1	..	..
183844	Dome light switch rear (3-point)	1	1	1	1	1	1	1	1	1	1

DOORS

All doors must be adjusted to each respective body. To obtain a satisfactory replacement of doors, it is advisable to return the damaged door to be repaired, if possible. If this cannot be done, the customer assumes the responsibility of the new door being a satisfactory fit. Specify on all orders the upholstery material, color of paint and striping.

196439	Door front right trimmed assembly	1	1	1	1	..	..	1	..	1	1
196440	Door front right trimmed assembly	..	..	..	..	1	..	..	1	..	..
196441	Door front right trimmed assembly	..	..	..	..	..	1	..	..	..	..
196442	Door front left trimmed assembly	1	1	1	1	..	..	1	..	1	1
196443	Door front left trimmed assembly	..	..	..	..	1	..	..	1	..	..
196444	Door front left trimmed assembly	..	..	..	..	..	1	..	..	..	..
196445	Door rear right trimmed assembly	1	1	1	1	..	..	1	..	1	1
196446	Door rear right trimmed assembly	..	..	..	..	1	..	..	1	..	..
196447	Door rear right trimmed assembly	..	..	..	..	..	1	..	..	..	..
196448	Door rear left trimmed assembly	1	1	1	1	..	..	1	..	1	1
196449	Door rear left trimmed assembly	..	..	..	..	1	..	..	1	..	..
196450	Door rear left trimmed assembly	..	..	..	..	..	1	..	..	..	..

DOOR PARTS

187224	Door anti-rattler	4	4	4	4	6	6	4	6	4	4
185601	Door bumper ($1\frac{1}{32}$")	x	x	x	x	x	x	x	x	x	x
185600	Door bumper ($1\frac{3}{32}$")	x	x	x	x	x	x	x	x	x	x
185602	Door bumper ($1\frac{9}{32}$")	x	x	x	x	x	x	x	x	x	x
164679	Door check strap	..	..	..	..	4	4	..	4	..	..
164679	Door check strap - rear	2	2	2	2	..	..	2	..	2	2
164699	Door check strap - front	2	2	2	2	..	..	2	..	2	2
164359	Door check strap fastener plate	4	4	4	4	4	4	4	4	4	4
167250	Door check strap guide	4	4	4	4	2	2	4	2	4	4
164358	Door check strap stop plate	..	..	..	..	2	2	..	2	..	..
195278	Door dove-tail—female (double)	..	..	..	..	2	2	..	2	..	..
184659	Door dove-tail—female	2	2	2	2	2	2	2	2	2	2
185849	Door dove-tail—female	2	2	2	2	..	..	2	..	2	2
193570	Door dove-tail—male	2	2	2	2	..	..	2	..	2	2
119298	Door dove-tail—male	2	2	2	2	6	6	2	6	2	2
5588	Screw (No. 8-32 x $\frac{7}{16}$" oval hd. mach.)	8	8	8	8	..	..	8	..	8	8
193887	Door hinge - front center left	..	..	..	..	1	1	..	1	..	..
185641	Door hinge - front center left	1	1	1	1	..	..	1	..	1	1
193886	Door hinge—front center right	..	..	..	..	1	1	..	1	..	..
185640	Door hinge—front center right	1	1	1	1	..	..	1	..	1	1
193889	Door hinge - front lower left	..	..	..	..	1	1	..	1	..	..
185639	Door hinge—front lower left	1	1	1	1	..	..	1	..	1	1
193888	Door hinge—front lower right	..	..	..	..	1	1	..	1	..	..
185638	Door hinge—front lower right	1	1	1	1	..	..	1	..	1	1
193885	Door hinge—front upper left	..	..	..	..	1	1	..	1	..	..
185631	Door hinge—front upper left	1	1	1	1	..	..	1	..	1	1
193884	Door hinge—front upper right	..	..	..	..	1	1	..	1	..	..
185630	Door hinge—front upper right	1	1	1	1	..	..	1	..	1	1
193257	Door hinge—rear center right	1	1	1	1	1	1	1	1	1	1

packardinfo.com

Piece No.	Name	No. Required 4000	4001	4002	4003	4004	4005	4006	4007	4008	4009
193258	Door hinge—rear center left	1	1	1	1	1	1	1	1	1	1
193404	Door hinge—rear lower right	.	.	.	.	1	.	.	1	.	.
193259	Door hinge—rear lower right	1	1	1	1	.	1	1	.	1	1
193405	Door hinge—rear lower left	.	.	.	.	1	.	.	1	.	.
193260	Door hinge—rear lower left	1	1	1	1	.	1	1	.	1	1
193255	Door hinge—rear upper right	1	1	1	1	1	1	1	1	1	1
193256	Door hinge—rear upper left	1	1	1	1	1	1	1	1	1	1
5819	Screw (1/4"—28 x 2 3/8" oval hd. mach.)	.	.	.	.	12	12	.	12	.	.
5854	Screw (1/4"—28 x 1 1/4" flat hd. mach.)	12	12	12	12	6	6	12	6	12	12
5820	Screw (1/4"—28 x 1 11/32" oval hd. mach.)	6	6	6	6	6	6	6	6	6	6
5693	Screw (1/4"—28 x 2 1/2" flat hd. mach.)	.	.	.	.	12	12	.	12	.	.
5277	Screw (1/4"—20 x 3/4" flat hd. mach.)	.	.	.	.	4	4	.	4	.	.
5716	Screw (1/4"—20 x 11/16" oval hd. mach.)	.	.	.	.	4	4	.	4	.	.
5899	Lockwasher (5/16")	.	.	.	.	8	8	.	8	.	.
193441	Door hinge pillar finishing plate—right	1	1	1	1	.	.	1	.	1	1
193440	Door hinge pillar finishing plate—left	1	1	1	1	.	.	1	.	1	1
193283	Door hinge pin	8	8	8	8	4	4	8	4	8	8
193977	Door hinge pin	.	.	.	.	6	6	.	6	.	.
193282	Door hinge pin	4	4	4	4	2	2	4	2	4	4
169772	Door hinge pin nut	4	4	4	4	2	2	4	2	4	4
5500	Door hinge pin lockwasher	4	4	4	4	2	2	4	2	4	4
193021	Door lock—front—right	1	1	1	1	.	.	1	.	1	1
183170	Door lock—front right	.	.	.	.	1	1	.	1	.	.
193054	Door lock—front left	1	1	1	1	.	.	1	.	1	1
183171	Door lock—front left	.	.	.	.	1	1	.	1	.	.
183171	Door lock—rear right	1	1	1	1	1	1	1	1	1	1
183170	Door lock—rear left	1	1	1	1	1	1	1	1	1	1
195388	Door lock handle—rear left	1	1	1	1	.	.	1	.	1	1
185736	Door lock handle—rear left	.	.	.	.	1	1	.	1	.	.
185828	Door lock handle—front left	.	.	.	.	1	1	.	1	.	.
193734	Door lock handle—front left	1	1	1	1	.	.	1	.	1	1
185734	Door lock handle—front right	.	.	.	.	1	1	.	1	.	.
193735	Door lock handle—front right (with key lock)	1	1	1	1	.	.	1	.	1	1
195389	Door lock handle—rear right (with key lock)	1	1	1	1	.	.	1	.	1	1
185735	Door lock handle—rear right (with key lock)	.	.	.	.	1	.	.	1	.	.
185828	Door lock handle—rear right	.	.	.	.	.	1	.	.	.	.
187685	Screw	2	2	2	2	2	1	2	2	2	2
185236	Door lock handle washer	2	2	2	2	2	1	2	2	2	2
5975	Screw (No. 10—32 x 1 5/16" oval hd. mach.)	4	4	4	4	.	.	4	.	4	4
193631	Door lock striker—front right	1	1	1	1	.	.	1	.	1	1
193632	Door lock striker—front left	1	1	1	1	.	.	1	.	1	1
182386	Door lock striker	.	.	.	.	4	4	.	4	.	.
170689	Door lock striker	2	2	2	2	.	.	2	.	2	2
170336	Nut	.	.	.	.	2	2	.	2	.	.
170335	Screw	.	.	.	.	2	.	.	2	.	.
195674	Screw	.	.	.	.	.	2	.	.	.	.
195360	Door lock remote control—front right	.	.	.	.	1	.	.	1	.	.
193191	Door lock remote control—front right	1	1	1	1	.	.	1	.	1	1
185713	Door lock remote control—front right	.	.	.	.	.	1	.	.	.	.
195361	Door lock remote control—front left	.	.	.	.	1	.	.	1	.	.
193190	Door lock remote control—front left	1	1	1	1	.	.	1	.	1	1
185712	Door lock remote control—front left	.	.	.	.	.	1	.	.	.	.
185650	Door lock remote control—rear right	.	.	.	.	1	1	.	1	.	.
185710	Door lock remote control—rear right	1	1	1	1	.	.	1	.	1	1
185700	Door lock remote control—rear left	.	.	.	.	1	1	.	1	.	.
185711	Door lock remote control—rear left	1	1	1	1	.	.	1	.	1	1
193918	Door lock remote control handle	4	4	4	4	4	4	4	4	4	4
193919	Door lock remote control handle escutcheon plate	4	4	4	4	4	4	4	4	4	4
193077	Door lock remote control handle escutcheon plate spring	4	4	4	4	4	4	4	4	4	4
195333	Door scuff plate—front left	.	.	.	.	.	1	.	.	.	.
193761	Door scuff plate—front left	1	1	1	1	.	.	1	.	1	1

packardinfo.com

Piece No.	Name	No. Required 4000	4001	4002	4003	4004	4005	4006	4007	4008	4009
195276	Door scuff plate front left	..	..	..	..	1	..	..	1	..	..
193760	Door scuff plate front right	1	1	1	1	..	..	1	..	1	1
195275	Door scuff plate front right	..	..	..	..	1	..	..	1	..	..
195332	Door scuff plate front right	..	..	..	..	..	1	..	..	..	..
193763	Door scuff plate rear left	1	1	1	1	..	..	1	..	1	1
195259	Door scuff plate rear left	..	..	..	..	1	..	..	1	..	..
195335	Door scuff plate rear left	..	..	..	..	..	1	..	..	..	..
193762	Door scuff plate rear right	1	1	1	1	..	..	1	..	1	1
195260	Door scuff plate rear right	..	..	..	..	1	..	..	1	..	..
195334	Door scuff plate rear right	..	..	..	..	..	1	..	..	..	..
193707	Door weatherstrip—front right	1	1	1	1	..	..	1	..	1	1
193708	Door weatherstrip—front left	1	1	1	1	..	..	1	..	1	1
193703	Door weatherstrip—upper right	1	1	1	1	..	..	1	..	1	1
193704	Door weatherstrip—upper left	1	1	1	1	..	..	1	..	1	1

FASTENERS

184788	Fastener eyelet	x	x	x	x	..	..	x	..	x	x
184789	Fastener eyelet	x	x	x	x	..	..	x	..	x	x
49543	Fastener eyelet plate	x	x	x	x	..	..	x	..	x	x
184002	Fastener single windshield frame	x	x	x	x	..	..	x	..	x	x
184785	Fastener single windshield frame	x	x	x	x	..	..	x	..	x	x
157380	Grommet (No. 1 canopy)	x	x	x	x	..	..	x	..	x	x
157381	Grommet washer (No. 1 canopy)	x	x	x	x	..	..	x	..	x	x
143578	Snap fastener machine screw post top canopy support	x	x	x	x	..	..	x	..	x	x
193201	Snap fastener screw post rear floor carpet	x	x	x	x	x	x	x	x	x	x
115799	Snap fastener socket carpet	x	x	x	x	x	x	x	x	x	x
115798	Snap fastener socket ring short prong carpet	x	x	x	x	x	x	x	x	x	x
112050	Snap fastener socket female—canopy	x	x	x	x	..	..	x	..	x	x
112054	Snap fastener socket top	x	x	x	x	..	..	x	..	x	x

packardinfo.com

FLOOR BOARD

185703	Floor board front assembly	1	1	1	1	1	..	1	1	1	1
185702	Floor board front assembly	..	..	..	..	..	1	..	..	..	..
185705	Floor board front filler	1	1	1	1	1	..	1	1	1	1
185704	Floor board front filler	..	..	..	..	..	1	..	..	..	..
195242	Floor board front felt center	1	1	1	1	1	1	1	1	1	1
187634	Floor board front felt front center	1	1	1	1	1	1	1	1	1	1
187631	Floor board front felt front side	2	2	2	2	2	2	2	2	2	2
185709	Floor board front felt rear	1	1	1	1	1	1	1	1	1	1
187632	Floor board front felt side	..	..	..	..	..	2	..	..	..	..
187633	Floor board front felt side	2	2	2	2	2	2	2	2	2	2
193206	Floor board rear assembly	1	1	1	1	..	..	1	..	..	..

FOLDING SEAT

196451	Folding seat trimmed assembly	2	2	2	2	..	..	2	..	..	..
196452	Folding seat trimmed assembly right	..	..	..	..	..	..	..	..	1	1
196453	Folding seat trimmed assembly right	..	..	..	..	1	..	..	1	..	..
196454	Folding seat trimmed assembly left	..	..	..	..	1	..	..	1	..	..
196455	Folding seat trimmed assembly left	..	..	..	..	..	..	..	..	1	1
193509	Folding seat untrimmed assembly	2	2	2	2	..	..	2	..	..	..
193831	Folding seat untrimmed assembly right	..	..	..	..	1	..	..	1	..	..
193942	Folding seat untrimmed assembly right	..	..	..	..	..	..	..	..	1	1
193880	Folding seat untrimmed assembly left	..	..	..	..	1	..	..	1	..	..
193941	Folding seat untrimmed assembly left	..	..	..	..	..	..	..	..	1	1
185113	Folding seat back to seat frame screw	4	4	4	4	..	..	4	..	..	..
185112	Folding seat back untrimmed assembly	2	2	2	2	..	..	2	..	..	..
185311	Folding seat handle	2	2	2	2	..	..	2	..	2	2

Printed in U. S. A.

Piece No.	Name	No. Required 4000	4001	4002	4003	4004	4005	4006	4007	4008	4009
100100	Folding seat pivot pin	4	4	4	4			4			
193306	Folding seat pivot pin retainer	2	2	2	2			2			
8204	Screw ($\frac{1}{4}$" - 28 x 2" flat hd. mach.)	4	4	4	4			4			
184283	Folding seat plate - right									2	2
184284	Folding seat plate - left									2	2
193307	Folding seat support - right	2	2	2	2			2			
193308	Folding seat support - left	2	2	2	2			2			
185114	Folding seat support to seat frame screw	4	4	4	4			4			
5506	Lockwasher ($\frac{3}{8}$")	4	4	4	4			4			
7006	Nut ($\frac{3}{8}$" - 24)	4	4	4	4			4			

FOOT REST

185316	Foot rest assembly	1	1	1	1			1			

FRONT SEAT

187738	Front seat (left) frame carrier bracket						1				
187739	Front seat (left) locking spring						1				
187736	Front seat (left) operating handle assembly						1				
146106	Spring						1				
7912	Washer ($\frac{7}{16}$")						1				
7990	Cotter pin ($\frac{1}{32}$" x $\frac{5}{8}$")						1				
5507	Lockwasher ($\frac{1}{4}$")						1				
	Nut ($\frac{1}{4}$" - 28)						1				
187738	Front seat (left) operating shaft cam						1				
180666	Front seat (left) operating spring						1				

HAND BRAKE

187681	Hand brake lever cutout cover	1	1	1	1	1	1	1	1	1	1

HASSOCK

185139	Hassock					2	2		2	2	2

INSTRUMENT BOARD

185782	Instrument board assembly	1	1	1	1	1	1	1	1	1	1
187936	Instrument board compartment door frame assy. - right	1	1	1	1	1	1	1	1	1	1
187935	Instrument board compartment door frame assy. - left	1	1	1	1	1	1	1	1	1	1
5724	Screw (No. 8 - 32 x $\frac{3}{8}$" oval hd.)	4	4	4	4	4	4	4	4	4	4
5860	Washer (No. 8)	4	4	4	4	4	4	4	4	4	4
185893	Instrument board compartment door anti-rattler	2	2	2	2	2	2	2	2	2	2
180307	Instrument board compartment door hinge assembly	2	2	2	2	2	2	2	2	2	2
5859	Rivet ($\frac{3}{16}$" - $\frac{5}{16}$" tub. rnd. hd.)	4	4	4	4	4	4	4	4	4	4
187495	Instrument board compartment door knob	2	2	2	2	2	2	2	2	2	2
7769	Screw (No. 10 - 32 x $\frac{1}{2}$" fill. hd. mach.)	2	2	2	2	2	2	2	2	2	2
5500	Lockwasher ($\frac{3}{16}$")	2	2	2	2	2	2	2	2	2	2
184753	Instrument board compartment door panel assembly—right	1	1	1	1	1	1	1	1	1	1
184751	Instrument board compartment door panel assembly—left	1	1	1	1	1	1	1	1	1	1
185029	Instrument board compartment door spring dowel	2	2	2	2	2	2	2	2	2	2
187941	Instrument board compartment door striker plate	2	2	2	2	2	2	2	2	2	2
111649	Rivet ($\frac{3}{16}$" x $\frac{1}{4}$" rnd. hd. tub.)	4	4	4	4	4	4	4	4	4	4
1906	Instrument board steering post bracket support	1	1	1	1	1	1	1	1	1	1
5774	Screw (No. 12 - 28 x $\frac{3}{4}$" oval hd. mach.)	2	2	2	2	2	2	2	2	2	2
5736	Screw ($\frac{1}{4}$" - 28 x $\frac{3}{4}$" hex. hd. mach.)	2	2	2	2	2	2	2	2	2	2
3858	Washer ($\frac{1}{4}$")	2	2	2	2	2	2	2	2	2	2
5502	Lockwasher ($\frac{1}{4}$")	4	4	4	4	4	4	4	4	4	4
7004	Nut ($\frac{1}{4}$" - 28)	2	2	2	2	2	2	2	2	2	2
187416	Instrument board steering post bracket support liner	1	1	1	1	1	1	1	1	1	1

packardinfo.com

MOULDING

Piece No.	Name	No. Required 4000	4001	4002	4003	4004	4005	4006	4007	4008	4009
193470	Moulding door window finishing—front right	1	1	1	1	..	..	1	..	1	1
193471	Moulding door window finishing—front left	1	1	1	1	..	..	1	..	1	1
193951	Moulding door window finishing—front lower left	..	..	..	..	..	1	..	..	..	..
193964	Moulding door window finishing—front lower right	..	..	..	..	..	1	..	..	..	..
193831	Moulding door window finishing—front lower right	..	..	..	..	1	..	..	1	..	..
193965	Moulding door window finishing—front lower left	..	..	..	..	1	..	..	1	..	..
193827	Moulding door window finishing—front side—front right	..	..	..	..	1	..	..	1	..	..
193954	Moulding door window finishing—front side—front right	..	..	..	..	..	1	..	..	..	..
193828	Moulding door window finishing—front side—front left	..	..	..	..	1	..	..	1	..	..
193955	Moulding door window finishing—front side—front left	..	..	..	..	..	1	..	..	..	..
193829	Moulding door window finishing—front upper right	..	..	..	..	1	..	..	1	..	..
193956	Moulding door window finishing—front upper right	..	..	..	..	..	1	..	..	..	..
193830	Moulding door window finishing—front upper left	..	..	..	..	1	..	..	1	..	..
193957	Moulding door window finishing—front upper left	..	..	..	..	..	1	..	..	..	..
193037	Moulding door window finishing—rear upper	2	2	2	2	..	..	2	..	2	2
193785	Moulding door window finishing—rear upper	..	..	..	..	2	2	..	2	..	..
193038	Moulding door window finishing—rear lower	2	2	2	2	..	..	2	..	2	2
193786	Moulding door window finishing—rear lower	..	..	..	..	2	2	..	2	..	..
183824	Moulding door window finishing—side	2	2	2	2	3	..	2	3	2	2
193948	Moulding door window finishing—side	..	..	..	..	..	3	..	..	..	..
193947	Moulding door window finishing—side	..	..	..	..	..	3	..	..	..	..
183825	Moulding door window finishing—side	2	2	2	2	3	..	2	3	2	2
183996	Moulding partition window finishing—lower	1	1	1	1	..	..	1	..	1	1
183997	Moulding partition window finishing—side right	1	1	1	1	..	..	1	..	1	1
183998	Moulding partition window finishing—side left	1	1	1	1	..	..	1	..	1	1
183995	Moulding partition window finishing—upper	1	1	1	1	..	..	1	..	1	1
166426	Moulding rear platform (44½" long)	..	..	..	..	..	1	..	..	..	..
183994	Moulding rear window finishing	..	1	..	1	..	..	..	..	..	1
183430	Moulding rear window finishing	1	..	1	..	1	1	..	1	1	..
195343	Moulding rear window finishing—lower	..	..	..	..	..	..	1	..	..	..
195344	Moulding rear window finishing—upper	..	..	..	..	..	..	1	..	..	..
183979	Moulding side window finishing—side	..	..	2	2	..	..	..	..	..	..
193990	Moulding side window finishing—side front right	..	..	..	..	..	..	1	1	..	..
193991	Moulding side window finishing—side front left	..	..	..	..	..	..	1	1	..	..
183980	Moulding side window finishing—side	..	..	2	2	..	..	..	..	..	..
193992	Moulding side window finishing—side rear right	..	..	..	..	..	..	..	1	..	..
193993	Moulding side window finishing—side rear left	..	..	..	..	..	..	..	1	..	..
193356	Moulding side window finishing—lower	..	..	2	2	..	..	..	..	..	..
195386	Moulding side window finishing—side rear right	..	..	..	..	..	..	1	..	..	..
195387	Moulding side window finishing—side rear left	..	..	..	..	..	..	1	..	..	..
193987	Moulding side window finishing—lower	..	..	..	..	..	..	..	2	..	..
195384	Moulding side window finishing—lower right	..	..	..	..	..	..	1	..	..	..
195385	Moulding side window finishing—lower left	..	..	..	..	..	..	1	..	..	..
193364	Moulding side window finishing—upper right	..	..	1	1	..	..	..	..	..	..
193988	Moulding side window finishing—upper right	..	..	..	..	..	..	..	1	..	..
193989	Moulding side window finishing—upper left	..	..	..	..	..	..	..	1	..	..
193363	Moulding side window finishing—upper left	..	..	1	1	..	..	..	..	..	..

REAR QUARTER LIGHT

183835	Rear quarter light	2	..	2	..	2	2	2	2	2	..
8224	Screw (No. 10 32 x ⅝" flat hd. mach.)	2	..	2		2	2	2	2	2	..
106214	Rear quarter light bracket	2	..	2	..	2	2	2	2	2	..
5756	Rear quarter light bracket ground connection screw (No. 6 - 40 x ¼" rnd. hd. mach.)	2		2	..	2	2	2	2	2	
102590	Rear quarter light bulb (7 V. 3 CP G-6 single contact)	2		2	..	2	2	2	2	2	..
183837	Rear quarter light glass and rim	2	..	2	..	2	2	2	2	2	..
183836	Rear quarter light reflector	2	..	2	..	2	2	2	2	2	..
183843	Rear quarter light switch	1	..	1	..	1	1	1	1	1	..

packardinfo.com

REAR VIEW MIRROR

Piece No.	Name	No. Required 4000	4001	4002	4003	4004	4005	4006	4007	4008	4009
193958	Rear view mirror assembly	1	1	1	1	.	.	1	.	1	1
179526	Rear view mirror assembly	.	.	.	.	1	1	.	1	.	.
185155	Screw (¼" - 20 x $\frac{9}{16}$" oval hd. mach.)	2	2	2	2	.	.	2	.	2	2
187293	Rear view mirror bracket assembly	.	.	.	.	1	1	.	1	.	.
191367	Rear view mirror glass	.	.	.	.	1	1	.	1	.	.

ROBE RAIL

184000	Robe rail assembly	.	.	.	.	1	1	.	1	1	1
185317	Robe rail assembly	1	1	1	1	.	.	1	.	.	.

SEAT CUSHION AND SPRINGS

195366	Seat back spring front	.	.	.	.	1	.	.	1	.	.
195288	Seat back spring—front	1	1	1	1	.	.	1	.	1	1
195392	Seat (left) back spring—front	.	.	.	.	.	1	.	.	.	.
195377	Seat (right) back spring—front	.	.	.	.	.	1	.	.	.	.
195289	Seat back spring—rear	.	.	1	1	.	.	.	.	.	.
195425	Seat back spring—rear	.	.	.	.	.	.	1	.	.	.
195306	Seat back spring—rear right	1	1	.	.	.	.	.	.	.	.
195433	Seat back spring—rear right	.	.	.	.	.	1	.	.	.	.
195418	Seat back spring—rear right	.	.	.	.	1	.	.	1	1	1
195307	Seat back spring—rear left	1	1	.	.	.	.	.	.	.	.
195434	Seat back spring—rear left	.	.	.	.	.	1	.	.	.	.
195419	Seat back spring—rear left	.	.	.	.	1	.	.	1	1	1
196456	Seat cushion assembly—front right	1	1	1	1	.	.	1	.	1	1
196457	Seat cushion assembly—front right	.	.	.	.	.	1	.	.	.	.
196458	Seat cushion assembly—front right	.	.	.	.	1	.	.	1	.	.
196459	Seat cushion assembly—front left	1	1	1	1	.	.	1	.	1	1
196460	Seat cushion assembly—front left	.	.	.	.	.	1	.	.	.	.
196461	Seat cushion assembly—front left	.	.	.	.	1	.	.	1	.	.
196462	Seat cushion assembly—rear	1	1	1	1	.	.	.	.	.	.
196463	Seat cushion assembly—rear	.	.	.	.	.	1	.	.	.	.
196464	Seat cushion assembly—rear	.	.	.	.	1	.	.	1	1	1
195287	Seat cushion spring—front left	1	1	1	1	.	.	1	.	1	1
195393	Seat cushion spring—front left	.	.	.	.	.	1	.	.	.	.
195365	Seat cushion spring—front left	.	.	.	.	1	.	.	1	.	.
195286	Seat cushion spring—front right	1	1	1	1	.	.	1	.	1	1
195376	Seat cushion spring—front right	.	.	.	.	.	1	.	.	.	.
195364	Seat cushion spring—front right	.	.	.	.	1	.	.	1	.	.
195668	Seat cushion spring—rear	.	.	.	.	1	.	.	1	1	1
187522	Seat cushion spring—rear	1	1	1	1	.	.	1	.	.	.
195432	Seat cushion spring—rear	.	.	.	.	.	1	.	.	.	.
172294	Seat cushion spring—folding seat	1	1	1	1	.	.	1	.	.	.

SMOKING CASE

184225	Smoking case ash receiver—left	1	1	1	1	.	.	1	.	.	.
195299	Smoking case ash receiver	.	.	.	.	2	.	.	2	2	2
173440	Smoking case ash receiver	.	.	.	.	.	2	.	.	.	.
184226	Smoking case ash receiver—right	1	1	1	1	.	.	1	.	.	.
187191	Smoking case cigar lighter—complete	.	.	.	.	2	1	.	2	2	2
185900	Smoking case cigar lighter	.	.	.	.	2	1	.	2	2	2
185138	Smoking case cigar lighter—complete	1	1	1	1	.	.	1	.	.	.
185140	Smoking case cigar lighter	1	1	1	1	.	.	1	.	.	.
182377	Smoking case cigar lighter tip	1	1	1	1	2	1	1	2	2	2
195298	Smoking case complete—right	.	.	.	.	1	.	.	1	1	1
195329	Smoking case complete—left	.	.	.	.	1	.	.	1	1	1
184428	Smoking case complete	1	1	1	1	.	.	1	.	.	.

packardinfo.com

TOGGLE GRIP

Piece No.	Name	No. Required 4000	4001	4002	4003	4004	4005	4006	4007	4008	4009
183991	Toggle grip	2	2	2	2	2	2	2	2	2	2

TOP

193647	Top (folding) hinge left	..	..	..	1	..	..	..	..	..	..
193646	Top (folding) hinge right	..	..	..	1	..	..	..	..	..	..
5314	Screw (¼"-28 x 4 1/8" flat hd. mach.)	..	..	..	2	..	..	..	..	..	..
8204	Screw (¼"-28 x 2" flat hd. mach.)	..	4	..	4	..	..	..	..	..	4
193596	Top (folding) hinge—right	..	1	..	..	..	..	..	..	..	..
184279	Top (folding) hinge—right	..	..	..	..	..	..	..	..	..	1
193597	Top (folding) hinge left	..	1	..	..	..	..	..	..	..	..
184280	Top (folding) hinge left	..	..	..	..	..	..	..	..	..	1
193598	Top (folding) hinge dove-tail right	..	1	..	..	..	..	..	..	..	..
183887	Top (folding) hinge dove-tail right	..	..	..	..	..	..	..	..	..	2
193599	Top (folding) hinge dove-tail—left	..	1	..	..	..	..	..	..	..	..
183888	Top (folding) hinge screw	..	2	..	..	..	..	..	..	..	2
193648	Top (folding) hinge screw	..	..	..	2	..	..	..	..	..	..
193673	Top prop	..	2	..	..	..	..	..	..	..	..
195304	Top prop	..	..	..	..	..	..	..	..	2	..
195305	Top prop	..	..	..	..	..	..	..	..	..	2
193211	Top prop	2	..	..	..	..	..	..	..	..	..
193657	Top prop right	..	..	..	1	..	..	..	..	..	..
193658	Top prop left	..	..	..	1	..	..	..	..	..	..
193978	Top prop	..	..	..	..	2	..	..	..	..	..
184023	Top prop nut	4	4	..	4	4	..	..	..	4	4
184022	Top prop spacer lower end cover	2	2	..	2	2	..	..	..	2	2

VANITY CASE

184429	Vanity case complete	1	1	1	1	..	..	1	..	..	..
184434	Vanity case card case	1	1	1	1	..	..	1	..	..	..
184431	Vanity case hand mirror	1	1	1	1	..	..	1	..	..	..
184432	Vanity case memorandum book	1	1	1	1	..	..	1	..	..	..
184433	Vanity case memorandum book pencil	1	1	1	1	..	..	1	..	..	..

VENTILATOR

187098	Ventilator cover assembly	1	1	1	1	1	1	1	1	1	1
137537	Ventilator cover hinge screw	2	2	2	2	2	2	2	2	2	2
3868	Washer (¼")	2	2	2	2	2	2	2	2	2	2
7104	Nut (¼" 28 castle)	2	2	2	2	2	2	2	2	2	2
4280	Cotter pin (1/16" x 1/2")	2	2	2	2	2	2	2	2	2	2
185776	Ventilator cover operating lever	1	1	1	1	1	1	1	1	1	1
7800	Screw (¼"-28 x 1" hex. hd. mach.)	2	2	2	2	2	2	2	2	2	2
5502	Lockwasher (¼")	2	2	2	2	2	2	2	2	2	2
7004	Nut (¼" 28)	2	2	2	2	2	2	2	2	2	2
3868	Washer (¼")	2	2	2	2	2	2	2	2	2	2
118771	Ventilator cover operating pin roller	1	1	1	1	1	1	1	1	1	1
4280	Cotter pin (1/16" x 1/2")	1	1	1	1	1	1	1	1	1	1
187192	Ventilator cover operating lever ratchet	1	1	1	1	1	1	1	1	1	1
5792	Ventilator cover operating lever ratchet yoke end pin (5/16")	1	1	1	1	1	1	1	1	1	1
4290	Cotter pin (3/32" x 5/8")	1	1	1	1	1	1	1	1	1	1
138261	Ventilator cover spring	1	1	1	1	1	1	1	1	1	1
145383	Ventilator hinge adjusting plate assembly left	1	1	1	1	1	1	1	1	1	1
145384	Ventilator hinge adjusting plate assembly right	1	1	1	1	1	1	1	1	1	1
7824	Screw (¼"-28 x 5/8" hex. hd. mach.)	2	2	2	2	2	2	2	2	2	2
5502	Lockwasher (¼")	2	2	2	2	2	2	2	2	2	2
3868	Washer (¼")	2	2	2	2	2	2	2	2	2	2
7004	Nut (¼" 28)	2	2	2	2	2	2	2	2	2	2

packardinfo.com

Piece No.	Name	No. Required 4000	4001	4002	4003	4004	4005	4006	4007	4008	4009
187137	Ventilator screen assembly	1	1	1	1	1	1	1	1	1	1
8011	Screw (No. 8 32 x 7/16" oval hd. mach.)	6	6	6	6	6	6	6	6	6	6
3774	Lockwasher (No. 8)	6	6	6	6	6	6	6	6	6	6
7002	Nut (No. 8 32)	6	6	6	6	6	6	6	6	6	6
185800	Ventilator side door gutter and operating lever bracket assembly—right	1	1	1	1	1	1	1	1	1	1
185799	Ventilator side-door gutter and operating lever bracket assembly—left	1	1	1	1	1	1	1	1	1	1
185798	Ventilator side door and hinge assembly—right	1	1	1	1	1	1	1	1	1	1
185797	Ventilator side door and hinge assembly—left	1	1	1	1	1	1	1	1	1	1
185893	Ventilator side door hinge bumper	2	2	2	2	2	2	2	2	2	2
185809	Ventilator side door hinge pin	2	2	2	2	2	2	2	2	2	2
4690	Cotter pin (1/16" x 3/8")	2	2	2	2	2	2	2	2	2	2
185807	Ventilator side door operating lever	2	2	2	2	2	2	2	2	2	2
5981	Pin (3/16") yoke end	2	2	2	2	2	2	2	2	2	2
5982	Pin (3/16") yoke end	2	2	2	2	2	2	2	2	2	2
190192	Pin spring washer	4	4	4	4	4	4	4	4	4	4
4690	Cotter pin (1/16" x 3/8")	4	4	4	4	4	4	4	4	4	4
187753	Ventilator side door operating lever handle	2	2	2	2	2	2	2	2	2	2
185801	Ventilator side door operating lever plunger	2	2	2	2	2	2	2	2	2	2
185808	Ventilator side door operating spring	2	2	2	2	2	2	2	2	2	2
185811	Ventilator side screen assembly	2	2	2	2	2	2	2	2	2	2
185814	Ventilator side weatherstrip	2	2	2	2	2	2	2	2	2	2
187126	Ventilator weatherstrip retainer assembly	1	1	1	1	1	1	1	1	1	1
5502	Lockwasher (1/4")	1	1	1	1	1	1	1	1	1	1
5430	Screw (1/4" 28 x 1/2" hex. hd. mach.)	1	1	1	1	1	1	1	1	1	1
185938	Ventilator weatherstrip	1	1	1	1	1	1	1	1	1	1

WINDOW

178949	Window anti-rattler	2	2	2	2	14	6	2	6	2	2
187982	Window anti-rattler	4	4	4	4			4		4	4
178928	Window anti-rattler partition—rear	1	1	1	1			1		1	1
180693	Window anti-rattler partition—front	1	1	1	1			1		1	1
29790	Window curtain guide cord	X	X	X	X	X	X	X	X	X	X
195264	Window curtain roller—door right	1	1	1	1			1		1	1
195266	Window curtain roller—door right					1	1		1		
195265	Window curtain roller—door left	1	1	1	1			1		1	1
195267	Window curtain roller—door left					1	1		1		
184441	Window curtain roller—rear	1		1		1	1		1	1	
195373	Window curtain roller—rear							1			
184442	Window curtain roller partition	1	1	1	1			1		1	1
195409	Window curtain roller—side left								1		
195411	Window curtain roller—side left							1			
184440	Window curtain roller—side left			1	1						
195410	Window curtain roller—side right								1		
195412	Window curtain roller—side right							1			
184439	Window curtain roller—side right			1	1						
184242	Window curtain roller tassel	4	4	6	6	3	3	6	4	4	5
182434	Window curtain stick	4	3	6	5	3	1	6	3	4	3
110310	Window curtain screw eye	8	6	12	10	6	2	12	6	8	6
193198	Window frame door glass channel assembly right	1	1	1	1			1		1	1
193197	Window frame door glass channel assembly left	1	1	1	1			1		1	1
8203	Screw (No. 10 32 x 1 3/16" flat hd. mach.)	8	8	8	8			8		8	8
5500	Lockwasher (No. 10)	8	8	8	8			8		8	8
7003	Nut (No. 10 32)	8	8	8	8			8		8	8
196034	Window glass anti-rattler door front					2	2		2		
183985	Window glass cushion rear		1		1						1
185346	Window glass cushion rear							1			
183429	Window glass cushion rear	1		1		1	1		1	1	
193790	Window glass door front					2			2		

packardinfo.com

Piece No.	Name	No. Required 4000	4001	4002	4003	4004	4005	4006	4007	4008	4009
193929	Window glass - door front	..	..	..	..	..	2	..	..	..	..
193192	Window glass - door front	2	2	2	2	..	..	2	..	2	2
185336	Window glass - door rear	..	..	..	..	2	..	..	2	..	..
193811	Window glass - door rear	..	..	..	..	..	2	..	..	..	..
185570	Window glass - door rear	2	2	2	2	..	..	2	..	2	2
195350	Window glass partition	..	..	..	..	1	..	..	1	..	..
181537	Window glass partition	1	1	1	1	..	..	1	..	1	1
183983	Window glass - rear	..	1	..	1	..	..	..	..	..	1
185347	Window glass - rear	..	..	..	..	..	..	1	..	..	..
183432	Window glass - rear	1	..	1	..	1	1	..	1	1	..
193324	Window glass—side	..	..	2	2	..	..	..	..	..	..
193997	Window glass—side	..	..	..	..	..	..	..	2	..	..
51331	Window glass packing	x	x	x	x	x	x	x	x	x	x
162217	Window glass partition bumper	2	2	2	2	..	..	2	..	2	2
193194	Window lifter assembly—door front right	1	1	1	1	..	..	1	..	1	1
195352	Window lifter assembly—door front right	..	..	..	..	1	..	..	1	..	..
195354	Window lifter assembly—door front	..	..	..	..	..	1	..	..	..	..
193193	Window lifter assembly—door front left	1	1	1	1	..	..	1	..	1	1
195353	Window lifter assembly—door front left	..	..	..	..	1	..	..	1	..	..
195355	Window lifter assembly—door front left	..	..	..	..	..	1	..	..	..	..
183850	Window lifter—door rear right assembly	..	..	..	..	1	1	..	1	..	..
184052	Window lifter—door rear right assembly	1	1	1	1	..	..	1	..	1	1
183851	Window lifter—door rear left assembly	..	..	..	..	1	1	..	1	..	..
184053	Window lifter—door rear left assembly	1	1	1	1	..	..	1	..	1	1
181759	Window lifter—partition assembly	1	1	1	1	..	..	1	..	1	1
184655	Window lifter—partition assembly	..	..	..	..	1	..	..	1	..	..
183846	Window lifter - side—right assembly	..	..	1	1	..	..	..	..	..	..
195494	Window lifter - side—right assembly	..	..	..	..	..	..	..	1	..	..
183847	Window lifter—side—left assembly	..	..	1	1	..	..	..	..	..	..
195493	Window lifter—side—left assembly	..	..	..	..	..	..	..	1	..	..
184694	Window regulator—door front left	1	1	1	1	1	1	1	1	1	1
184693	Window regulator—door front right	1	1	1	1	1	1	1	1	1	1
183871	Window regulator—door rear right	1	1	1	1	1	1	1	1	1	1
183870	Window regulator—door rear left	1	1	1	1	1	1	1	1	1	1
183838	Window regulator handle	5	5	7	7	5	4	7	6	5	5
183839	Window regulator handle escutcheon plate	5	5	7	7	5	4	7	6	5	5
133264	Window regulator handle escutcheon plate spring	5	5	7	7	5	4	7	6	5	5
132972	Window regulator handle pin	5	5	7	7	5	4	7	6	5	5
184036	Window regulator—partition	1	1	1	1	..	..	1	..	1	1
185259	Window regulator—partition	..	..	..	..	1	..	..	1	..	..
183872	Window regulator—side right	..	..	1	1	..	..	1	1	..	..
183873	Window regulator—side left	..	..	1	1	..	..	1	1	..	..
193408	Window weatherstrip—door front	2	2	2	2	..	..	2	..	2	2

WINDSHIELD AND WINDSHIELD CLEANER

193950	Windshield assembly	..	..	..	..	1	..	..	1	..	..
193825	Windshield assembly	..	..	..	..	..	1	..	..	..	..
193600	Windshield assembly	1	1	1	1	..	..	1	..	1	1
5588	Windshield to body screw (No. 8 - 32 x $\frac{7}{16}$" oval hd. mach.	24	24	24	24	..	..	24	..	24	24
194871	Windshield cable—short	1	1	1	1	1	1	1	1	1	1
197925	Windshield cable - intermediate	1	1	1	1	1	..	1	1	1	1
197939	Windshield cable - intermediate	..	..	..	..	..	1	..	..	..	..
194873	Windshield cable - long	1	1	1	1	1	1	1	1	1	1
194874	Windshield cable adjusting nut (L. H. thread)	1	1	1	1	1	1	1	1	1	1
194875	Windshield cable adjusting nut (R. H. thread)	1	1	1	1	1	1	1	1	1	1
194876	Windshield cable adjusting screw	1	1	1	1	1	1	1	1	1	1
194877	Windshield cable lever assembly	1	1	1	1	1	1	1	1	1	1
185765	Windshield clamp ferrule—right	1	1	1	1	1	1	1	1	1	1
187689	Windshield clamp ferrule—left	1	1	1	1	1	1	1	1	1	1

packardinfo.com

Printed in U. S. A.

Piece No.	Name	No. Required									
		4000	4001	4002	4003	4004	4005	4006	4007	4008	4009
187674	Windshield clamp striker plate assembly	2	2	2	2	2	2	2	2	2	2
193382	Windshield cleaner to dash connecting tube assembly	1	1	1	1	1	1	1	1	1	1
193380	Windshield cleaner intermediate tube assembly right	1	1	1	1	1	1	1	1	1	1
193381	Windshield cleaner intermediate tube assembly—left	1	1	1	1	1	1	1	1	1	1
193379	Windshield cleaner intermediate tube connection	1	1	1	1	1	1	1	1	1	1
173133	Screw (No. 10 x ½"—Parker Kalon—flat hd.)	2	2	2	2	2	2	2	2	2	2
177840	Windshield cleaner intermediate tube clip—single	2	2	2	2	2	2	2	2	2	2
140009	Windshield cleaner hose	2	2	2	2	2	2	2	2	2	2
185947	Windshield cleaner hose	2	2	2	2	2	2	2	2	2	2
184799	Windshield cleaner tube clip—upper	4	4	4	4	..	..	4	..	4	4
184293	Screw (No. 4—40 x ¼" rnd. hd. mach.)	4	4	4	4	..	..	4	..	4	4
195323	Windshield cleaner motor complete—right	..	..	..	..	1	1	..	1	..	..
193714	Windshield cleaner motor complete—right	1	1	1	1	..	..	1	..	1	1
195324	Windshield cleaner motor complete—left	..	..	..	..	1	1	..	1	..	..
193715	Windshield cleaner motor complete—left	1	1	1	1	..	..	1	..	1	1
187000	Windshield cleaner motor operating lever knob	..	..	..	..	2	2	..	2	..	..
193764	Windshield cleaner motor operating lever ferrule	..	..	..	..	2	2	..	2	..	..
7911	Windshield cleaner motor support bracket screw (No. 10—32 x ⅜" rnd. hd. mach.)	..	..	..	..	4	4	..	4	..	..
5500	Lockwasher (No. 10)	..	..	..	..	4	4	..	4	..	..
193716	Windshield cleaner motor attaching screw	2	2	2	2	..	..	2	..	2	2
187635	Windshield cleaner motor shaft washer	..	..	..	..	2	2	..	2	..	..
193717	Windshield cleaner motor spacer	2	2	2	2	..	..	2	..	2	2
195378	Windshield cleaner wiper	2	2	2	2	2	..	2	2	2	2
195330	Windshield cleaner wiper	..	..	..	..	..	2	..	..	..	..
195391	Windshield cleaner wiper arm	2	2	2	2	..	..	2	..	2	2
195325	Windshield cleaner wiper arm	..	..	..	..	2	..	..	2	..	..
195331	Windshield cleaner wiper arm	..	..	..	..	..	2	..	..	..	..
187011	Windshield cleaner wiper arm spring	2	2	2	2	2	2	2	2	2	2
193572	Windshield cowl weatherstrip	1	1	1	1	1	1	1	1	1	1
5475	Screw (No. 4—40 x 5/16" flat hd.)	2	2	2	2	2	2	2	2	2	2
33170	Screw ferrule (No. 4)	2	2	2	2	2	2	2	2	2	2
194866	Windshield finger pull and cable lever assembly	1	1	1	1	1	1	1	1	1	1
197937	Windshield finger pull assembly—right	1	1	1	1	1	1	1	1	1	1
194868	Windshield finger pull cap nut	2	2	2	2	2	2	2	2	2	2
194869	Windshield finger pull cap nut spring	2	2	2	2	2	2	2	2	2	2
197929	Windshield frame and glass	1	1	1	1	..	..	1	..	1	1
197930	Windshield frame and glass	..	..	..	..	..	1	..	..	..	..
197931	Windshield frame and glass	..	..	..	..	1	..	..	1	..	..
197932	Windshield glass	1	1	1	1	..	..	1	..	..	..
197933	Windshield glass	..	..	..	..	..	1	..	..	..	..
197934	Windshield glass	..	..	..	..	1	..	..	1	..	..
193832	Windshield glass	..	..	..	..	..	1	..	..	..	..
193949	Windshield glass	..	..	..	..	1	..	..	1	..	..
193601	Windshield glass	1	1	1	1	..	..	1	..	1	1
193571	Windshield hinge weatherstrip	1	1	1	1	1	1	1	1	1	1
194870	Windshield hinge weatherstrip block	1	1	1	1	1	1	1	1	1	1
197935	Windshield locking mechanism—left	1	1	1	1	1	1	1	1	1	1
197936	Windshield locking mechanism—right	1	1	1	1	1	1	1	1	1	1
194864	Windshield locking mechanism lower screw	2	2	2	2	2	2	2	2	2	2
194865	Windshield locking mechanism upper screw	2	2	2	2	2	2	2	2	2	2
194878	Windshield right hand locking cap screw	1	1	1	1	1	1	1	1	1	1
194879	Windshield right hand locking cap screw washer	1	1	1	1	1	1	1	1	1	1
193851	Windshield sash glass retainer weatherstrip	1	1	1	1	1	1	1	1	1	1
184800	Windshield sash sector screw (No. 10 24 x 7/8" fill. hd. mach.)	2	2	2	2	2	2	2	2	2	2
3866	Washer (3/16")	3	3	3	3	3	3	3	3	3	3

packardinfo.com

packardinfo.com